DRT3500 SERIES

Superior FIREPLACES®

Our name is our promise.

The DRT3500 Series is the true representation of fully-featured value. Equipped standard with appealing features such as ceramic glass, interior illumination, full-function remote, and blower kit. Choose from a variety of interior liners for a personal "signature" touch. Versatile. Efficient. Affordable. The DRT3500 Series is value without compromise.

FEATURED DRT3540 fireplace shown with Blended Brown Fiber Liners and interior illumination feature

EXCLUSIVE FEATURES

- Available in 35”, 40” and 45” models
- Mid-size 17” depth saves installed floor space
- Combination top/rear flue configuration
- Electronic ignition with seamless battery backup and provides continued operation in the event of a power outage (IPI/CPI switch standard)
- Outstanding heating efficiency for increased comfort and lower operating costs
- Ceramic glass for optimum heat transfer and a protective screen*
- Beautifully crafted high-definition log set
- Interior selections consist of black porcelain and a variety of ceramic fiber liners (required)
- Mood enhancing interior illumination with six distinctive settings
- Factory installed blower with six speed settings to fine tune your heating needs
- Full-function remote control included (IPI/CPI, thermostat, flame height, blower, lighting)
- Durable textured powder coat finish
- 20 year limited warranty

*All applicable models comply with ANSI Z21.50/88 barrier requirements.

FEATURED DRT3535 Ceramic Fiber Log Set and Black Porcelain Liner

INTERIOR

Choose from four optional liners (Black Painted Interior is standard).

Porcelain Liner Kit (Black)

Blackstone

Greystone

Blended Brown

DECORATIVE FACE SURROUNDS

(Optional)

Give your fireplace a truly modern finish with a stainless steel decorative face surround kit.

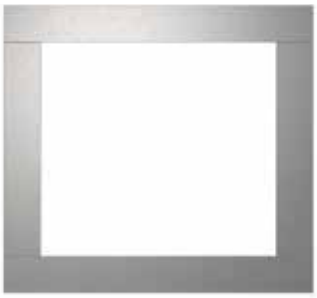

STAINLESS SURROUND
Four-Sided

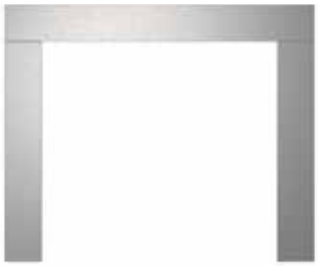

STAINLESS SURROUND
Three-Sided

ADDITIONAL ACCESSORIES

- Manual On/Off and Smart Thermostat Modes
- 6 Flame Modulation Settings
- 6 Blower Control Settings
- 6 Interior Illumination Settings

ProFlame II Remote

APPLIANCE SPECIFICATIONS

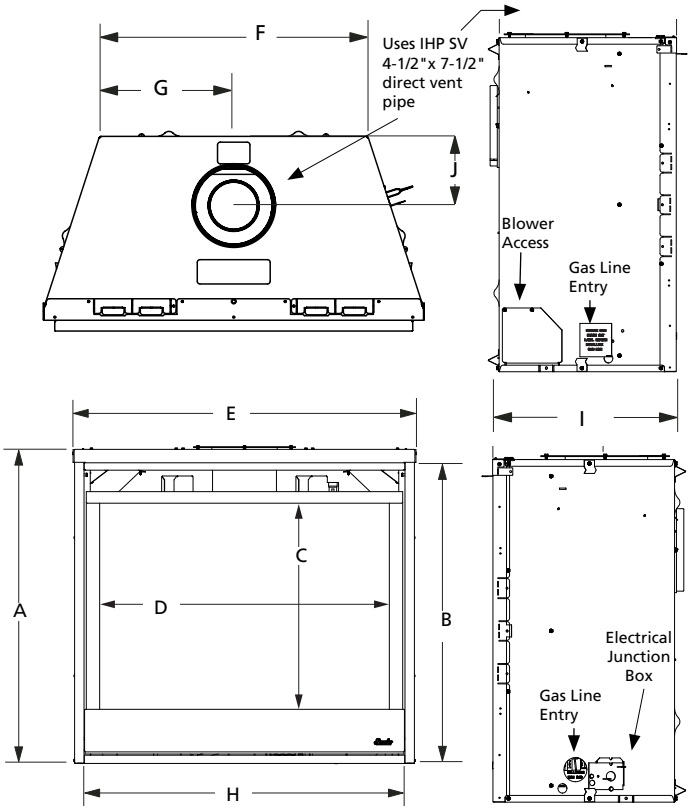

	DRT3535	DRT3540	DRT3545
A	32-1/8"	37-1/8"	37-1/8"
B	26-5/8"	34-5/8"	34-5/8"
C	19-1/2"	24-1/2"	24-1/2"
D	29-1/4"	34-1/4"	39-1/4"
E	35-1/4"	40-1/4"	45-1/4"
F	25"	30"	35"
G	12-1/2"	15"	17-1/2"
H	32-7/8"	37-7/8"	42-7/8"
I	17"	17"	17"
J	6-7/8"	6-7/8"	6-7/8"

On the Cover: DRT3540 shown with Blackstone Ceramic Fiber Liner

FLAT WALL FRAMING SPECIFICATIONS

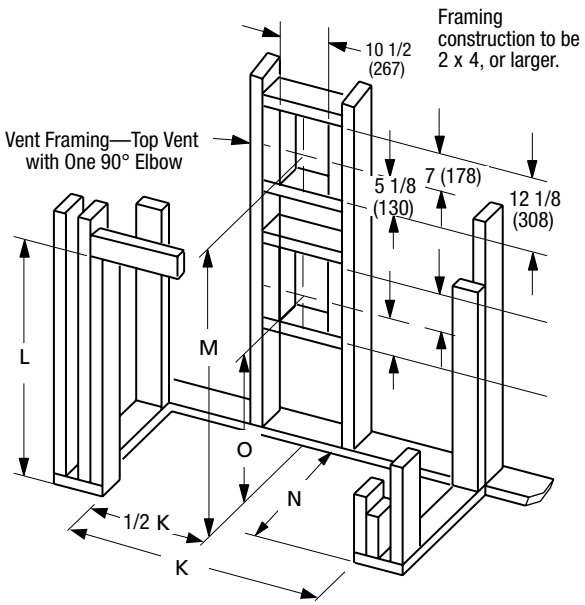

	DRT3535	DRT3540	DRT3545
K	35-7/8"	40-7/8"	45-7/8"
L	36-1/4"*	41-1/4"*	41-1/4"*
M	38-3/4"	43-3/4"	43-3/4"
N	18-1/2"	18-1/2"	18-1/2"
O	23-3/8"	28-1/4"	28-1/4"

* Includes 4" for fold-up standoffs

FIREPLACE EFFICIENCIES

MODEL	FUEL	BTU/HR	AFUE**	P4 / ENERGUIDE*
DRT3535	NG	26,000	68.5%	62.5%
DRT3535	LP	23,000	67%	69.6%
DRT3540	NG	33,000	68.1%	62.4%
DRT3540	LP	27,000	66%	62.6%
DRT3545	NG	35,000	67.2%	62.9%
DRT3545	LP	30,000	64%	63.0%

*Intermittent ignition systems.

**Annual Fuel Utilization Efficiency (AFUE) is the recognized U.S. rating system for the total efficiency of heating products.

IMPORTANT NOTES:
As with any fireplace, this appliance is extremely hot during operation. Read and understand all operating instructions before using this appliance. For further information, consult your dealer.

Local conditions, such as elevation, wind, vent configuration and choice of fuel will affect overall appearance of the fire and heating performance. Performance can also vary with home design and insulation, climate, condition and type of fuel used, appliance location, burn rate, accessories chosen, chimney installation and how the appliance is operated.

Diagrams, illustrations and photographs are not to scale—consult installation instructions. Product designs, materials, dimensions, specifications, colors and prices are subject to change or discontinuance without notice.

Superior FIREPLACES®

© 2020 Innovative Hearth Products

785716M 04/20

Visit us online
SuperiorFireplaces.us.com

PFS C US Report #F13-094

NFI

Canada ENERGUIDE
Look for the **EnerGuide** Gas Fireplace Energy Efficiency Rating in the brochure
Based on CSA P.4.1-2015