# INSTALLATION AND OPERATION MANUAL

## Free-Standing
## EPA Certified
## Wood-Burning Stoves

**Save These Instructions**
**For Future Reference**

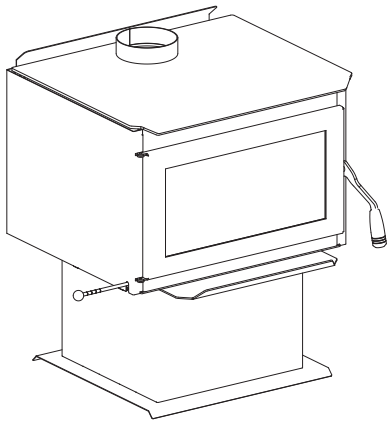

**P/N 900109-01, Rev. C, 10/2018**

P900109-01

## Wood-Burning Stove
## Model WXS2021WS

PFS C US

Report # 14-193

NATIONAL FIREPLACE INSTITUTE NFI CERTIFIED
www.nficertified.org

We recommend that our woodburning hearth products be installed and serviced by professionals who are certified in the U.S. by the National Fireplace Institute® (NFI) as NFI Woodburning Specialists or who are certified in Canada by Wood Energy Technical Training (WETT).

Wood Energy Technical Training

**A French manual is available upon request. Order P/N 900189-01.**

**Ce manuel d'installation est disponible en francais, simplement en faire la demande. Numéro de la pièce 900189-01.**

**This appliance must be properly installed and operated in order to prevent the possibility of a house fire. Please read this entire installation and operation manual before installing and using your wood stove. Failure to follow these instructions could result in property damage, bodily injury or even death. Contact your local building or fire officials to obtain a permit and information on any installation requirements and inspection requirements in your area.**

### ⚠ WARNING

- **Hot! Do not touch! The glass and surfaces of this appliance will be hot during operation and will retain heat for a while after shutting off the appliance. Severe burns may result.**
- **Carefully supervise children in the same room as appliance.**

# CONGRATULATIONS!

When you purchased your new wood stove, you joined the ranks of thousands of individuals whose answer to their home heating needs reflects their concern for aesthetics, efficiency and our environment. We extend our continued support to help you achieve the maximum benefit and enjoyment available from your new wood stove.

Thank you for selecting an Innovative Hearth Products, LLC (IHP) Stove as the answer to your home supplemental heating needs.

## TABLE OF CONTENTS


Using This Manual ..... 2
Important Safety Information ..... 3
Testing Information ..... 4
Draft Requirements ..... 4
Selecting the Proper Venting System ..... 4
Negative Pressure Warning ..... 5
Clearances to Combustibles ..... 6-7
Floor Protection ..... 6
Chimney and Connector ..... 6
Components ..... 6
Installation Clearances ..... 7
Specifications ..... 8
Typical Installation Figures ..... 9
Chimney Installation ..... 10
Manufactured (mobile) Home Installations ..... 10
Chimney - Wall Pass-Through Requirements ..... 11
Outside Combustion Air Kit Installation ..... 12
Brick Installation ..... 13
Post Installation Checks ..... 14
Paint Curing ..... 15
Burn-In Period ..... 15
Operating Hints ..... 15
Door Operation ..... 15
Starting and Maintaining a Fire ..... 16
Fuel ..... 17
Getting the Most Out of Your Stove ..... 18
Maximizing Your Stove's Overall Efficiency ..... 18
Achieving Clean, Long Burns ..... 18
Optional Blower Kit ..... 19
Do's and Don'ts ..... 20
Smoke Detector Recommended ..... 20
Carbon Monoxide Monitor Recommended ..... 20
Maintenance ..... 21-22
Troubleshooting ..... 23
Replacement Parts Lists ..... 24
Accessories ..... 25
Safety / Listing Label ..... 26
Warranty ..... 27
Product Reference Information ..... 28


## USING THIS MANUAL

Please read and carefully follow all of the instructions found in this manual. Please pay special attention to the safety instructions provided in this manual.

**PRODUCT IS SUBJECT TO CHANGE WITHOUT NOTICE**

# IMPORTANT SAFETY AND WARNING INFORMATION

## READ THIS MANUAL IN ITS ENTIRETY AND UNDERSTAND THESE RULES TO FOLLOW FOR SAFETY.

1. When this room heater is not properly installed, a house fire may result. To reduce the risk of fire, follow the installation instructions. Contact local building or fire officials about restrictions and installation inspection requirements in your area.
2. Wear gloves during installation to avoid injury from sharp edges on the stove and/or its parts.
3. This unit is designed and engineered to burn only dry, well-seasoned wood. Burning wet wood will greatly reduce the stove's efficiency, produce excessive amounts of smoke and can cause dangerous chimney fires due to creosote build-up.
4. Before opening the door, the draft control must be fully open to avoid possible combustion flash (ignition of hot volatile gases as the door is opened).
5. Never use gasoline, gasoline-type lantern fuel, kerosene, charcoal lighter fluid, or similar liquids to start or 'freshenup' a fire in this heater. Keep all such liquids well away from the heater while it is in use. DO NOT USE CHEMICALS OR FLUIDS TO START THE FIRE.
6. While burning, fuel utilizes oxygen from the air in the room. Be sure to allow an adequate amount of fresh air into the room where the stove is burning.
7. The outside surface of the stove will be hot while burning properly and can set items like clothing and curtains on fire. Keep furnishings and other combustible materials away from the stove. Using the heat from the stove to dry wet clothing can be hazardous if clothes are placed too near the surface of the stove.
8. HOT WHILE IN OPERATION. KEEP CHILDREN, CLOTHING FURNISHINGS AND COMBUSTIBLE MATERIAL A CONSIDERABLE DISTANCE AWAY. CONTACT MAY CAUSE SKIN BURNS. Do not allow children to play near the stove without close supervision. Do not touch the stove while it is burning. Use extreme caution while the unit is in use. Surface temperatures become dangerously hot and can cause serious burns.
9. Do not allow anyone to operate the stove who is not familiar with the operating instructions.
10. Attempts to achieve heat output rates that exceed stove design specifications can result in permanent damage to the stove. Never leave your stove unattended on high burn rates. This may cause overfiring. Overfiring the stove may cause a house fire. If the stove glows, you are overfiring.
11. Keep a water hose or hand-operated fire extinguisher close for safety.
12. Smoke Detectors - Since there are always several potential sources of fire in any home, we recommend installing smoke detectors. If possible, install the smoke detector in a hallway adjacent to the room (to reduce the possibility of occasional false activation from the heat produced by the stove). If your local code requires a smoke detector be installed within the same room, you must follow the requirements of your local code. Check with your local building department for requirements in your area.
13. Inspect your chimney at least once a month during the burning season to check for soot and creosote accumulations. Any accumulations over 1/8" thick should be removed by a professional chimney sweep. Do not attempt to burn out heavy creosote accumulations with a hot fire. If large accumulations are occurring, review your burning procedures.
14. If a creosote fire should develop, the fire department should be called immediately and then attempts should be made to control the fire until assistance arrives. If a "runaway" fire should develop causing over-heating of the stove, the door and draft regulators should be closed immediately. The fire should die down once deprived of oxygen. After a severe chimney fire, the complete chimney system should be checked before further use.
15. Do Not Use Grate Or Elevate Fire - Build Wood Fire Directly On Hearth (firebrick). Do not use andirons or other methods of supporting the fuel.
16. Please read this entire manual before you install and use your new room heater. Failure to follow instructions may result in property damage, bodily injury, or even death.
17. Check all local building and safety codes before installation. The installation instructions and appropriate code requirements must be followed exactly and without compromise. In the absence of local codes the following standards and codes must be followed.
18. In the U.S.A, install in accordance with the National Fire Protection Association's Code, NFPA 211, Standards for Chimneys, Fireplaces, Vents and Solid-Fuel-Burning Appliances, or similar regulations, may apply to the installation of a Solid-Fuel-Burning appliance in your area. In Canada, the guideline is established by the CSA Standard, CAN/CSA-B365-M93, Installation Code for Solid-Fuel-Burning Appliances and Equipment.
19. DO NOT CONNECT TO OR USE IN CONJUNCTION WITH ANY AIR DISTRIBUTION DUCTWORK UNLESS SPECIFICALLY APPROVED FOR SUCH INSTALLATIONS.
20. WARNING: BURNING IMPROPER FUEL (I.E. CHARCOAL) CAN RESULT IN CARBON MONOXIDE POISONING, WHICH MAY LEAD TO DEATH!
21. Carbon Monoxide Poisoning – Early signs of carbon monoxide poisoning resemble the flu with headaches, dizziness, or nausea. If you have these signs, get fresh air at once! Have the heater inspected by a qualified service technician. Some people are more affected by carbon monoxide than others. These include pregnant women, people with heart or lung disease or anemia, those under the influence of alcohol, and those at high altitudes.
22. Failure to use manufacturer provided parts, variations in techniques and construction materials or practices other than those described in this manual may create a fire hazard and void the limited warranty.
23. Do not make any make-shift compromises during installation. Any modification or alteration may result in damage to the appliance or dwelling and will void the warranty, certification and listings of this unit.
24. These appliances are designed as supplemental heaters. Therefore, it is advisable to have an alternate heat source when installed in a dwelling.

25. **Do Not Overfire – If Heater or Chimney Connector Glows, You Are Overfiring.**
26. **DO NOT CONNECT THIS UNIT TO A CHIMNEY FLUE SERVING ANOTHER APPLIANCE.**
27. **DO NOT BURN GARBAGE OR FLAMMABLE FLUIDS SUCH AS GASOLINE, NAPHTHA OR ENGINE OIL.**
28. **This wood heater has a manufacturer-set minimum low burn rate that must not be altered. It is against federal regulations to alter this setting or otherwise operate this wood heater in a manner inconsistent with operating instructions in this manual.**

**⚠ WARNING**

**This product can expose you to chemicals including Carbon Black, which is known to the State of California to cause cancer, and Carbon Monoxide, which is known to the State of California to cause birth defects or other reproductive harm. For more information go to www.P65Warnings.ca.gov**

## TESTING INFORMATION

This manual describes the installation and operation of these non-catalytic wood heaters. These heaters meet the U.S. Environmental Protection Agency's emissions limits, and are compliant with 2015 EPA Phase III particulate emission standards. This heater has been developed, tested and constructed in accordance with the requirements of UL 1482-2010, ULC S627-00 and HUD standards and is listed by PFS Corporation. These heaters have been approved for residential and mobile home installations.

| Model | Emission Rate | EPA Test Range BTU/hr | Max. Output BTU/hr | EPA Default Efficiency |
|---|---|---|---|---|
| WXS2021WS | 3.05 g/hr | 10,491 - 30,387 | 76,000 | 63% * |

** Default - Category rating as assigned by the EPA. The estimated efficiency is as follows: 63% (non-catalyst equipped), 72% (catalyst-equipped), and 78% (wood pellets). See § 60.536(i)(3) at www.epa.gov.*

## DRAFT REQUIREMENTS

This appliance is dependent upon a properly functioning chimney for optimum performance. It is a high efficiency appliance that loses much less heat up the chimney than older appliances and fireplaces. For this reason it is important to match the stove to the chimney. The chimney has two functions:

1. It draws combustion air into the appliance (without air, no fuel will burn) and
2. It exhausts combustion by-products. Your new appliance is what is known as a "natural draft" appliance.

The appliance depends solely on the natural draft of the chimney system to draw combustion air into the unit. Draft is the force that moves air from the appliance up into the chimney. The amount of draft in your chimney depends on the length of the chimney, local geography, nearby obstructions and other factors. Too much draft may cause excessive temperatures in the appliance (overfiring). Slow or inadequate draft equals poor combustion and possible smoking problems.

The following are some conditions that may contribute to poor chimney draft:

1. A chimney too large for your appliance.
2. A chimney with not enough height to produce adequate draft.
3. A chimney with excessive height (this may allow exhaust to cool too much before exiting, which will stall the rate the exhaust exits).
4. Offsets in the venting system are too restrictive (see *Chimney Guidelines)*.

Inadequate draft will cause the appliance to leak smoke into the room through the stove and the chimney connector joints.

Excessive draft may cause an uncontrollable burn or a glowing red stove or chimney part.

**Overfiring Damage** - If the heater or chimney connector glows, you are overfiring. Other symptoms may include: Cracking, warping or burning out of components, stove glass may develop a haze, which will not come off with cleaning.

Overfiring of a stove is a condition where excessive temperatures are reached, beyond the design capabilities of the appliance. The damage that occurs from overfiring is not covered under the manufacturer's limited warranty.

Also see *Troubleshooting* on ***Page 22***.

## SELECTING THE PROPER VENTING SYSTEM

The appliance is merely one component of a larger system. The other equally important component is the venting system. This is necessary for achieving the required flow of combustion air to the fire chamber and for safely removing unwanted combustion by-products from the appliance. If the venting system's design does not promote these ends, the system may not function properly. Poorly functioning venting systems may create performance problems as well as be a safety hazard. **A draft test should read greater than .04' W.C. (inches water column) and less than .08" W.C**. As per NFPA-211 standard (see paragraph below), the installer must take into account all variables within the installation and install the appliance in such a manner that satisfies the draft requirements of the appliance. See *Chimney Guidelines* below to assist you in selecting the proper venting system for your installation.

**American National Standards Institute ANSI/NFPA 211, Standard for Chimneys, Fireplaces, Vents, and Solid Fuel-Burning Appliances - See Draft Section:** A chimney or vent shall be so designed and constructed to develop a flow sufficient to completely remove all flue and vent gases to the outside atmosphere. The venting system shall satisfy the draft requirements of the connected appliance in accordance with the manufacturer's instructions.

**Chimney Guidelines:**

- This appliance requires approximately 12 feet minimum of "effective draw" provided by the venting system. As a rule of thumb, every 90 degree total direction change in the venting will result in a loss of approximately 5 feet of "effective draw." Example: If two 45 degree offsets are used, subtract 5 feet from the actual vertical vent height to determine your "effective draw." In this case if you had 14 feet of vertical vent, the effective draw would only be approximately 9 feet (14 ft. - 5 ft. = 9 ft.), therefore it may be necessary to add additional height to the venting system.
- Do not install an offset within the first two feet above the flue outlet on the appliance.
- In well insulated and weather tight homes, it may be difficult to establish a good draft up your chimney. The poor draft is caused by a shortage of air in the house. In this situation an Outside Air Kit may need to be installed *(See Negative Pressure Warning on* ***Page 5*** *and Outside Combustion Air on* ***Page 12****)*.

**Chimney Height Requirements**

The chimney must extend 3' (.92m) above the level of roof penetration and a minimum of 2' (.61m) higher than any roof surface within 10' (3m) *(see **Figure 1**)*. Check with your local building officials for additional requirements for your area.

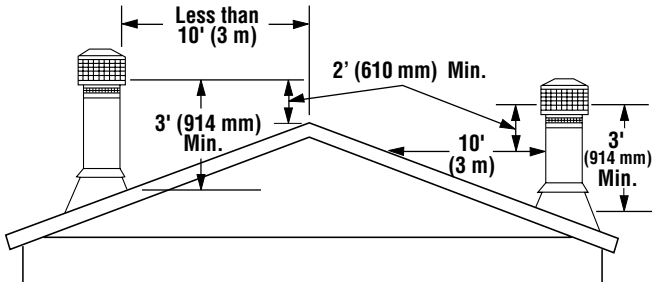


***Figure 1** - Chimney Height Requirements*

To pass inspection in nearly any jurisdiction, the chimney must meet both safety and exhaust flow requirements. The (3' by) 2' by 10' rule applies to both masonry and factory-built chimneys.

**** Ref. USA - National Standard, NFPA 211-latest edition and Canada National Standard CSA B365-01-latest edition. Vents installed with a listed cap shall terminate in accordance with the terms of the cap's listings.***

## NEGATIVE PRESSURE WARNING

This appliance is not designed to be operated in a negative pressure. In very airtight homes with large kitchen exhaust fans, furnace cold air returns, fresh air exchange systems and any other air system in close proximity to the heating appliance may create a negative pressure in the same room as the heating appliance. This can create dangerous back drafting of the stove and chimney joints, drawing combustion by-products into the home. Be sure your home has adequate makeup air to eliminate negative pressures caused by the above-mentioned sources. Outside air connected to the appliance probably will not resolve such a problem as the appliance is not the source of negative pressure. IHP accepts no liability for damages resulting from negative pressures described here.

**Ventilation Requirements** - Provide adequate air for combustion. The fresh air requirements of this appliance must be met within the space where it will be installed. Ventilation is essential when using a Solid-Fuel-Burning heater. In well insulated and weather tight homes, it may be difficult to establish a good draft up the chimney (caused by a shortage of air in the home). The lack of air is caused by many common household appliances which exhaust air from the home (such as a furnace, heat pump, air conditioner, clothes dryer, exhaust fans, fireplaces, and other fuel burning appliances). Also, the combustion process of this heater uses oxygen from inside the dwelling. If the available fresh air delivery in the dwelling is insufficient to support the demands of these appliances, problems can result (i.e. excessive negative pressure can develop in the dwelling which will affect the rate at which this appliance can draft thus resulting in performance problems. To correct this problem it may help to open a window (preferably on the windward side of the house) or install an optional outside air kit.

## CLEARANCES TO COMBUSTIBLES

**WARNING: BE ABSOLUTELY SURE THE DISTANCE BETWEEN THE HEATER AND THE SURFACE OF ANY COMBUSTIBLE CONSTRUCTION IS NOT LESS THAN SHOWN IN THE FIGURES ON PAGE 7.**

### Floor Protection

**USA** - The floor in front and under the heater must be protected with noncombustible material. The covering must extend 16" in front of the door opening of the heater and 8" to either side of the door opening.

**Canada** - The floor in front and under the heater must be protected with noncombustible material. The covering must extend 450 mm in front of the door opening of the heater and 200 mm to either side of the stove body and 200 mm to the rear or to the wall, whichever is smaller.

**USA and Canada** - A chimney connector / venting extends horizontally over the floor, protection must also cover the floor under the connector / venting and at least 2" (51 mm) to either side.

## CHIMNEY AND CONNECTOR

Minimum 6" diameter, minimum 24 MSG black steel connector pipe with UL103HT listed factory-built chimney suitable for use with solid fuels or masonry chimney. Horizontal connection not tested, refer to local building codes for installation. See installation instructions for details. Restrictions apply! Read instructions before installing.

Residential chimney systems must be from the same brands as listed for mobile homes but connector pipe may be double wall, single wall or single wall with shield as listed above.

This appliance may be vented into a code-approved masonry chimney with flue liner.

**WARNING: CHIMNEY CONNECTOR MUST BE IN GOOD CONDITION AND KEPT CLEAN. DO NOT INSTALL DAMAGED PARTS.**

All of the stove connector pipe used must be of the same brand. The chimney that the stove pipe transitions into may be a different brand. Other than the transition of the stove pipe into the chimney, do Not mix different brand vent components. Install all vent components per vent manufacturer's instructions.

The chimney connector shall not pass through an attic or roof space, closet or similar concealed space, or a floor, or ceiling. Where passage through a wall, or partition of combustible construction is desired, the installation shall conform to CAN/CSA-B365, Installation Code for Solid-Fuel-Burning Appliances and Equipment.

There must be an effective vapor barrier at the location where the chimney or other component penetrates to the exterior of the structure. Follow the vent manufacturer's detailed instructions.

**IMPORTANT NOTE:** See *Draft Requirements* and *Selecting a Proper Venting System* on ***Page 4*** to assist you in choosing the proper venting system for your installation.

Clearance dimensions are to flue collar. If a single wall connector pipe with shield is used, a 1 inch air space is needed between pipe and shield. Shield attaches to rear of stove pipe and must run from stove top to ceiling. Pipe shield shall be UL listed.



NOTE: DIAGRAMS & ILLUSTRATIONS ARE NOT TO SCALE.

## INSTALLATION CLEARANCES - REFER TO *FIGURES 2, 3 AND 4*

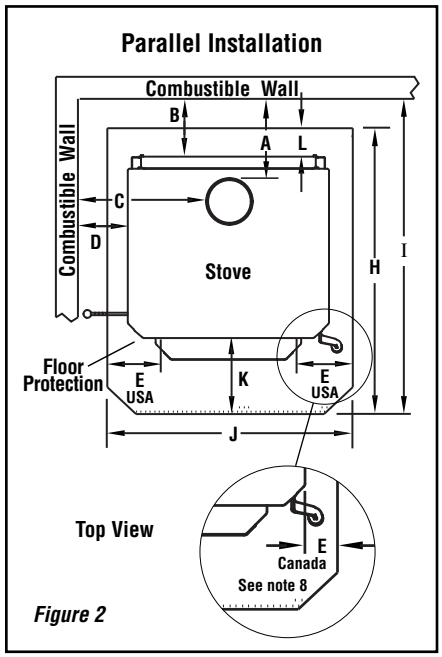


*Figure 2*

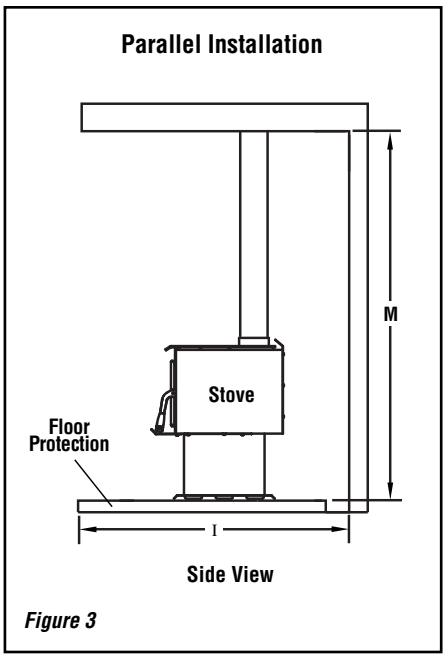


*Figure 3*

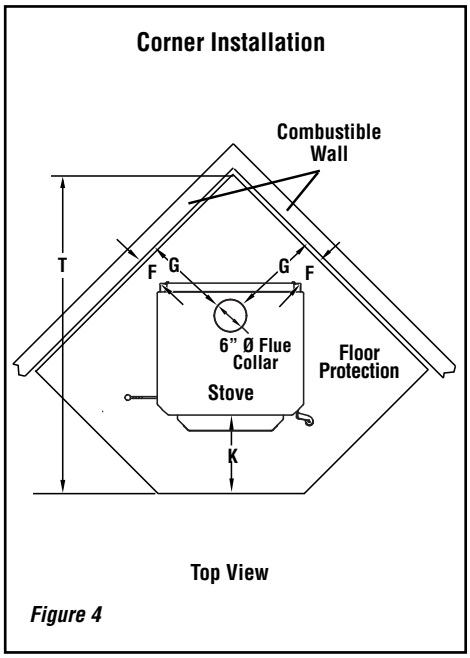


*Figure 4*

**USA** - inches (millimeters)

| PIPE | INSTALLATION | A (3) | B (1) | C (3) | D (1) | E (8) | F (1) | G (3) | H (2) | I (6) | J (2) | K (7) | L (5) | M | T (6) |
|---|---|---|---|---|---|---|---|---|---|---|---|---|---|---|---|
| Single Wall | Residential | 14-1/4 (362) | 11-1/2 (292) | 23 (584) | 13-3/8 (340) | 8 (200) | 9 (229) | 18 (457) | 37-5/8 (956) | 49 (1245) | 34-7/8 (886) | 16 (406) | 0 (0) | 84 (2134) | 61-1/2 (1562) |
| Double Wall | Residential or Mobile Home | 12 (305) | 9-1/8 (232) | 19-1/2 (495) | 9-5/8 (245) | 8 (200) | 6 (152) | 15 (381) | 37-5/8 (956) | 46-3/4 (1188) | 34-7/8 (886) | 16 (406) | 0 (0) | 84 (2134) | 57-1/2 (1461) |

**CANADA** - inches (millimeters)

| PIPE | INSTALLATION | A (3) | B (1) | C (3) | D (1) | E (8) | F (1) | G (3) | H (2) | I (6) | J (2) | K (7) | L (5) | M | T (6) |
|---|---|---|---|---|---|---|---|---|---|---|---|---|---|---|---|
| Single Wall | Residential | 14-1/4 (362) | 11-1/2 (292) | 23 (584) | 13-3/8 (340) | 8 (200) | 9 (229) | 18 (457) | 47-5/8 (1210) | 51 (1295) | 40-7/8 (1038) | 18 (450) | 8 (200) | 84 (2134) | 63-1/2 (1613) |
| Double Wall | Residential or Mobile Home | 12 (305) | 9-1/8 (232) | 19-1/2 (495) | 9-5/8 (245) | 8 (200) | 6 (152) | 15 (381) | 47-5/8 (1210) | 48-3/4 (1238) | 40-7/8 (1038) | 18 (450) | 8 (200) | 84 (2134) | 59-1/2 (1511) |

**Footnotes:**

1- These dimensions to the stove body are for reference only. Actual distances should be measured from the stove's flue collar.

2- Minimum noncombustible hearth pad dimensions.

3- Clearances to connector pipe shall be measured from the flue collar of the stove.

5- In corner applications, when installed at minimum back wall clearances, the required floor protection is dimensioned off the back plane of the stove, therefore the floor protection required off the back corners (at a 45 degree angle) only needs to extend to the wall. This situation will only occur in CANADA installations.

6- Reference dimension only, to assist in planning the installation.

7- Measured from front of floor protection to the front of firebox.

8- USA=8" (200mm) from door opening, Canada=8" (200mm) from sides and back of unit.



NOTE: DIAGRAMS & ILLUSTRATIONS ARE NOT TO SCALE.

# SPECIFICATIONS - WXS2021WS

| Product Reference Information | | | |
|---|---|---|---|
| *Cat. No.* | *Description* | *Ship. Weight* | *Ship. Volume* |
| F2630 | WXS2021WS Wood-Burning Stove | 310 lb. | 23 cu. ft. |

***NOTES:***

- *Dimensions shown are approximations only (+/- 1/4")*
- *Diagrams, illustrations and photographs are not to scale – consult installation instructions. Product designs, materials, dimensions, specifications, colors and prices are subject to change or discontinuance without notice.*
- *Approved for residential and manufactured home installations.*
- *Optional Kits Available:*

  *Blower*
  *Outside Air Kit*

❶ *Square-foot heating capacities and burn times are approximations only. Actual performance may vary depending upon home design and insulation, ceiling heights, climate, condition and type of wood used, appliance location, burn rate, accessories chosen, chimney installation and how the appliance is operated.*

## *Specifications*

| | |
|---|---|
| **Stove Pipe Diameter Single Wall or Double Wall** | **6" (152 mm)** |
| **Log Length** | **20" Max. (508 mm Max.)** |
| **Firebox** | **Volume = 2.1 cu. ft.** |
| **Cord Wood: ❶** | **76,000 BTUs/hr.** |
| **Maximum Burn Times ❶** | **7-9 hours** |
| **Heating Capacity ❶** | **1,200 to 2,000 sq. ft.** |
| **EPA Grams Per Hour** | **3.0 gr/hr** |

**EPA Phase II and Washington State Approved**

## *Listing*

The WXS2021WS woodstove is safety listed with the following agency:

- *PFS Corporation, Tested to UL 1482, ULC S627*

C PFS US

**Report # 14-193**

## *Dimensions*

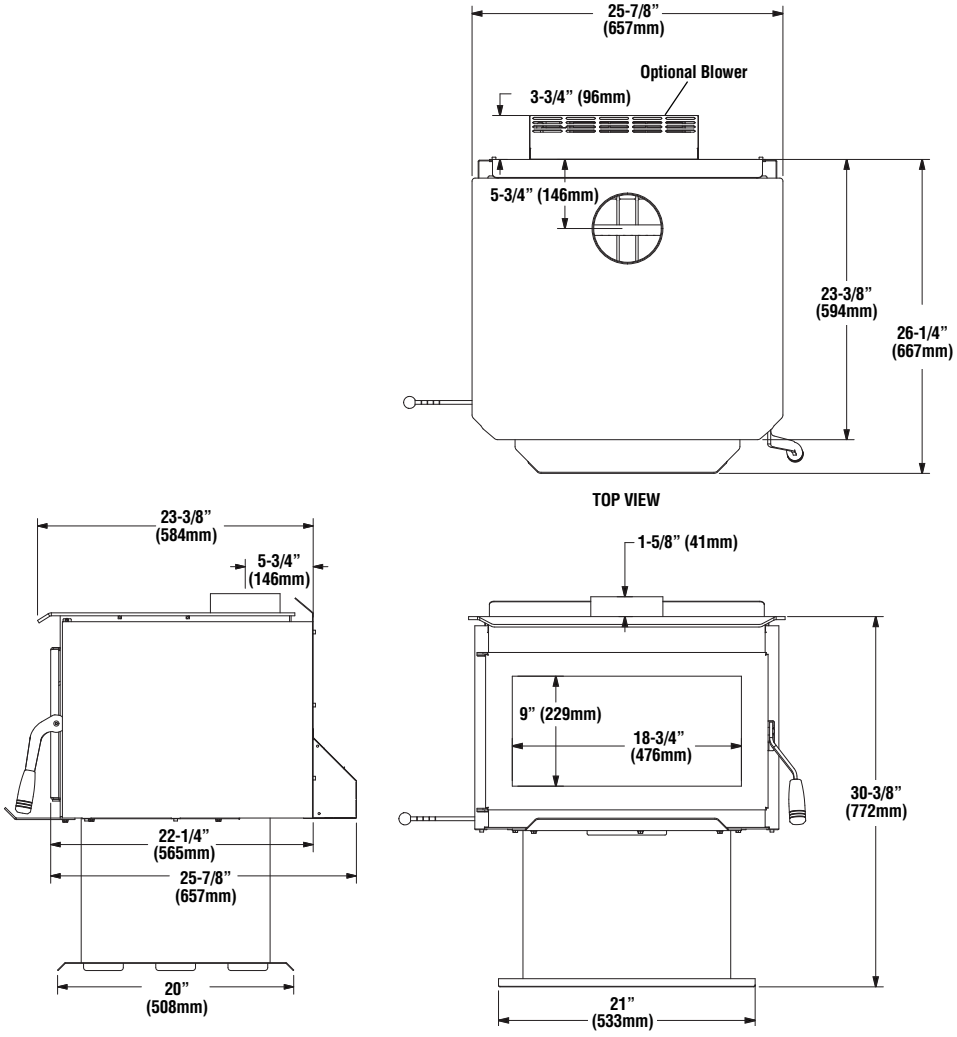


***Figure 5***

**NOTE: DIAGRAMS & ILLUSTRATIONS ARE NOT TO SCALE.**

## TYPICAL INSTALLATIONS

**YOUR CHIMNEY INSTALLATION MUST COMPLY WITH LOCAL BUILDING AND FIRE CODES.**

**Single Wall Pipe**
**Using 6” Diameter Single Wall Connector Pipe**

**INSTALL VENTING SYSTEM PER VENT MANUFACTURERS INSTRUCTIONS!**

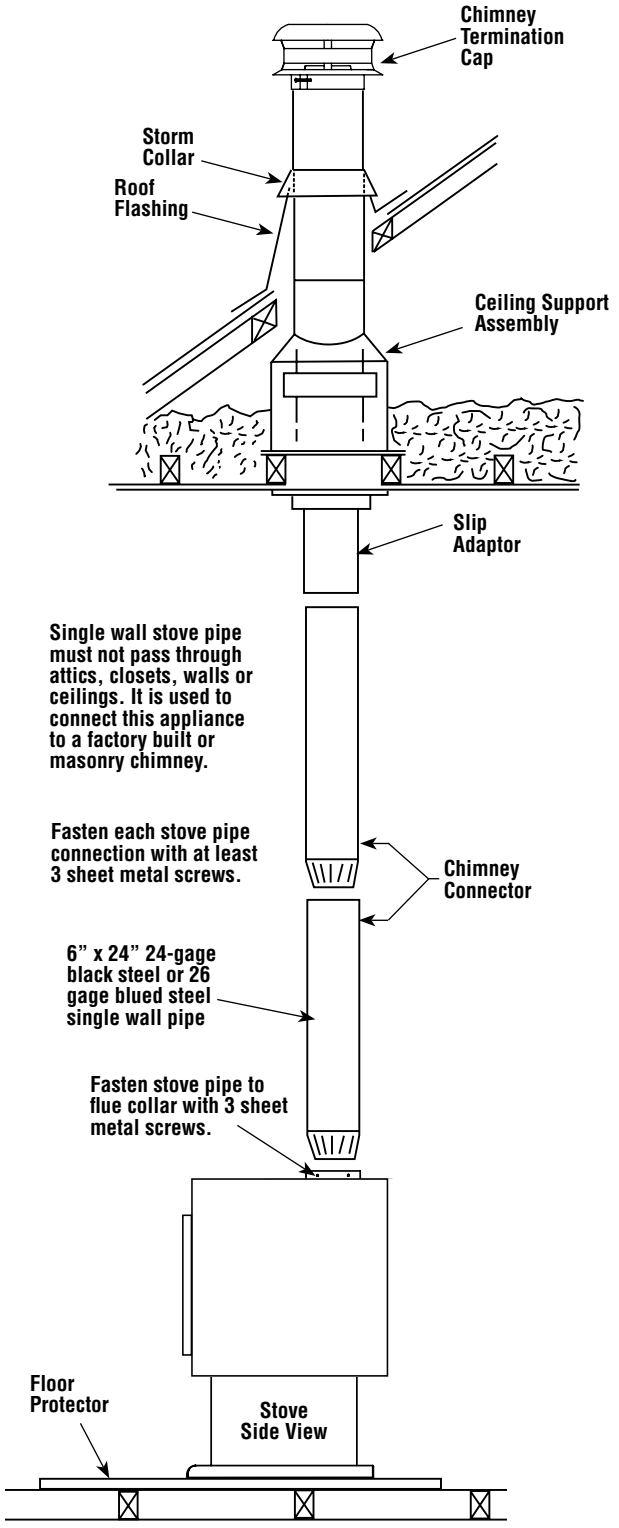


*Figure 6 - Typical Installation*



NOTE: DIAGRAMS & ILLUSTRATIONS ARE NOT TO SCALE.

## CHIMNEY INSTALLATION

- Install chimney as per manufacturer's instructions. Some brands of pipe may require removal of the spacer ring in the flue collar.
- All horizontal runs of pipe should be as short as possible and are required by NFPA No. 211 to have an upward pitch or rise in the same direction the smoke travels of no less than 1/4" to the linear foot. The connector pipe must meet minimum clearances in any direction to walls or other combustible materials. It must attach to a listed double wall metal chimney at least 6" in diameter or to a masonry chimney with a flue passage of at least 48 square inches.
- It is required that a chimney connector pipe not extend further than the inner wall of the flue when it is connected to a masonry chimney and that it either be cemented to the masonry or be installed without cement in a thimble connected to the masonry wall. When the connector is inserted into a thimble, the joint must be tight enough so that it will not be dislodged in normal use.
- Chimney connector pipes should never pass through a floor, ceiling, fire wall, partition, or combustible construction of any type unless certain precautions are taken. The best method is to use a listed thimble and a listed chimney in accordance with the manufacturer's directions. NFPA No. 211 gives approved methods for passing a flue pipe through combustible constructions *(see **Page 11**)*.

## Manufactured Home Installations *(ref. **Figure 8**)*

**This appliance is approved for installation into a manufactured (mobile) home.**

**Installation should be in accordance with the Mobile Home Construction and Safety Standard, Title 24 CFR, Part 3280 (in Canada CAN/CSA Z240 MH), or, when such a standard is not applicable, the Standard for Mobile Home Installations, ANSI A225.1.**

All mobile home installations require an outside air kit (see ***Page 24*** for ordering information). The stove must be secured to the floor and grounded to the chassis of the mobile home.

**WARNING: DO NOT INSTALL IN SLEEPING ROOM OF A MOBILE HOME.**

**CAUTION: THE STRUCTURAL INTEGRITY OF THE MOBILE HOME FLOOR, WALL AND CEILING/ROOF MUST BE MAINTAINED.**

**Approved Chimney -** Your stove is approved for use with Class A, UL 103 HT (U.S.) / ULC-S629 (Canada) Listed Residential Type and Building Heating Appliance Chimney (HT chimney - 2100° Fahrenheit) and double wall connector pipe**.** Approved chimney brands are Security Chimneys™, Jakes Evans/GSW, Dura-vent, Metal Fab, Ameri-Tec, Metalbestos and Industrial Chimney (ICC).

Clearances to connector shall be measured from 6" flue collar. Restrictions apply! Read instructions before installing.

**YOUR CHIMNEY INSTALLATION MUST COMPLY WITH LOCAL BUILDING AND FIRE CODES.**

**Double Wall Pipe**
**Using 6" Diameter Type L-Vent Connector Pipe**
**Manufactured (Mobile) Home Installation Shown**

**INSTALL VENTING SYSTEM PER VENT MANUFACTURERS INSTRUCTIONS!**

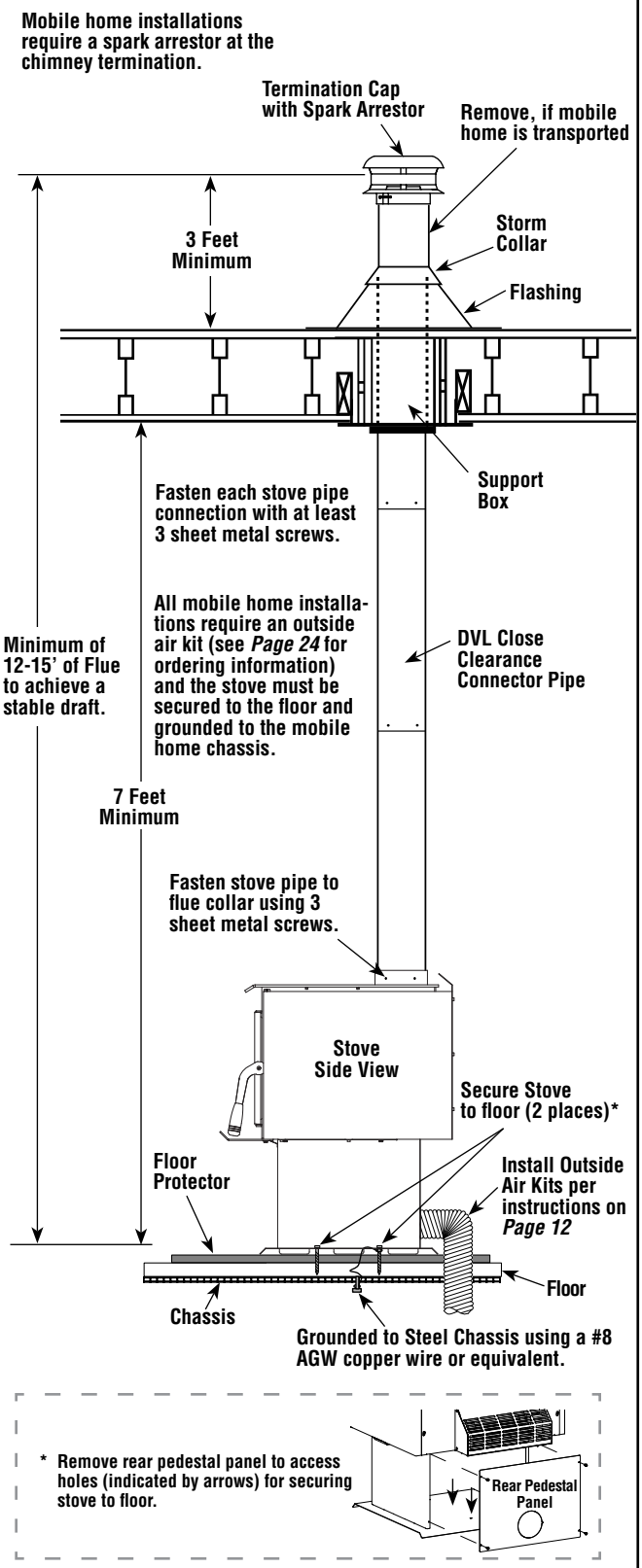


***Figure 8 - Typical Installation***



NOTE: DIAGRAMS & ILLUSTRATIONS ARE NOT TO SCALE.

## Chimney Connector Systems and Clearances from Combustible Walls for Residential Heating Appliances (NFPA 211) - Refer to *Figure 9*

**System A.** Minimum 3.5 in. (90 mm) thick brick masonry wall framed into combustible wall with a minimum of 12 in. (305 mm) brick separation from clay liner to combustibles. Fireclay liner (ASTM C 315, Standard Specification for Clay Flue Linings, or equivalent), minimum 5/8 in. (16 mm) wall thickness, shall run from outer surface of brick wall to, but not beyond, the inner surface of chimney flue liner and shall be firmly cemented in place.

Clearance: 12 in. (305 mm)

**System B**. Solid-insulated, listed factory-built chimney length of the same inside diameter as the chimney connector and having 1 in. (25.4 mm) or more of insulation with a minimum 9 in. (229 mm) air space between the outer wall of the chimney length and combustibles.

The inner end of the chimney length shall be flush with the inside of the masonry chimney flue and shall be sealed to the flue and to the brick masonry penetration with non-water-soluble refractory cement. Supports shall be securely fastened to wall surfaces on all sides.

Fasteners between supports and the chimney length shall not penetrate the chimney liner.

Clearance: 9 in. (229 mm)

**System C.** Sheet steel chimney connector, minimum 24 gage [0.024 in. (0.61 mm)] in thickness, with a ventilated thimble, minimum 24 gage [0.024 in. (0.61 mm)] in thickness, having two 1 in. (25.4 mm) air channels, separated from combustibles by a minimum of 6 in. (152 mm) of glass fiber insulation. Opening shall be covered, and thimble supported with a sheet steel support, minimum 24 gage [0.024 in. (0.61 mm)] in thickness.

Supports shall be securely fastened to wall surfaces on all sides and shall be sized to fit and hold chimney section. Fasteners used to secure chimney section shall not penetrate chimney flue liner.

Clearance: 6 in. (152 mm)

**System D.** Solid-insulated, listed factory-built chimney length with an inside diameter 2 in. (51 mm) larger than the chimney connector and having 1 in. (25.4 mm) or more of insulation, serving as a pass-through for a single wall sheet steel chimney connector of minimum 24 gage [0.024 in. (0.61 mm)] thickness, with a minimum 2 in. (51 mm) air space between the outer wall of chimney section and combustibles. Minimum length of chimney section shall be 12 in. (305 mm). Chimney section concentric with and spaced 1 in. (25.4 mm) away from connector by means of sheet steel support plates on both ends of chimney section. Opening shall be covered, and chimney section supported on both sides with sheet steel supports of minimum 24 gage [0.024 in. (0.61 mm)] thickness.

Supports shall be securely fastened to wall surfaces on all sides and shall be sized to fit and hold chimney section. Fasteners used to secure chimney section shall not penetrate chimney flue liner.

Clearance: 2 in. (51 mm)

**Additional requirements:**

1. **Insulation material used as part of wall pass-through system shall be of noncombustible material and shall have a thermal conductivity of 1.0 Btu-in./hr-ft² - ºF (4.88 kg-cal/hr-m² - ºC) or less.**
2. **All clearances and thicknesses are minimums; larger clearances and thicknesses shall be permitted.**
3. **Any material used to close up an opening for the connector shall be of noncombustible material.**
4. **A connector to a masonry chimney, except for System B, shall extend in one continuous piece through the wall pass-through system and the chimney wall to the inner face of the flue liner, but not beyond.**

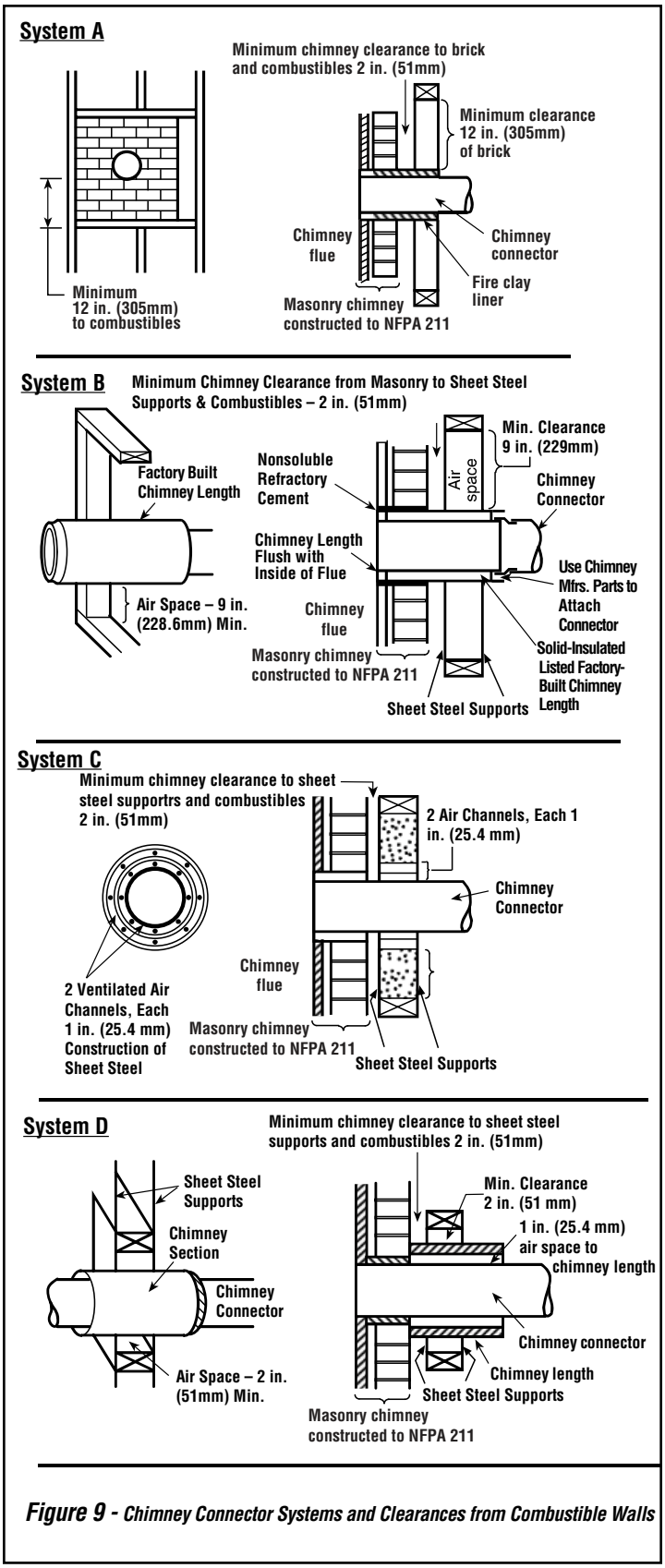


***Figure 9** - Chimney Connector Systems and Clearances from Combustible Walls*

NOTE: DIAGRAMS & ILLUSTRATIONS ARE NOT TO SCALE.

# OUTSIDE COMBUSTION AIR KIT INSTALLATION

## Outside Air Kits

**Order:**

1 ea. P/N UZIAD Outside Air Coupler Kit (connects outside air ducting, UZI, to stove)
***AND***
1 ea. P/N UZI Outside Air Ducting Kit (includes 4" insulated flex x 10' long)
***AND***
1 ea. P/N H8874 Outside Air Panel and Air Channel Kit (includes rear pedestal panel and side and front air channels)

An outside air kit is required in Manufactured (mobile) Home installations. For residential installations, check with local authorities having jurisdiction in your area, it may be mandatory.

## INSTALLATION INSTRUCTIONS

1. **(Manufactured Home Installations Only)** Secure stove to floor per instructions in ***Figure 8*** on ***Page 10***.
2. **Install rear pedestal panel as shown in *Figure 11***.
3. **Install Outside Air Coupler** - Line up the "V" notch in the coupler with the "V" notch in the opening on the back of the pedestal *(see **Figure 11**)*. Push and twist so the rolled edge catches and continue turning a full 360° to lock the coupler in place.
4. **Install Ducting and Air Register *(refer to Figures 11 through 13)*** - The outside air assembly may be installed according to the following requirements:
   a) Duct length should be kept to a minimum.
   b) The air intake register must not be installed more than ten (10) feet (3050 mm) above the base of the stove.
   c) The fresh air must come from outside the house. The air intake must not draw air from the attic, from the basement or garage.
   d) The air intake should be installed where it is not likely to be blocked by snow or exposed to extreme wind and away from automobile exhaust fumes, gas meters and other vents.
   e) The duct and register may be installed above or below floor level.

   - Make a 4-1/4" (110 mm) hole in the outside wall of the house at the chosen location. From outside, place the outside air register in the hole (open side down) and fasten the register to the wall, with screws as shown *(see **Figures 12B and 13**)*.
   - Install the coupler onto the existing collar on stove *(see **Figure 11**)*.
   - Attach the duct to the coupler on stove *(see **Figures 12A and 12B**)*. Using the aluminium tape provided, wrap the tape around the joint between the flexible duct and the air inlet.
5. **Install Front and Side Air Channels** - Install the front and side air channels per the instructions in ***Figure 14*** on ***Page 13***.

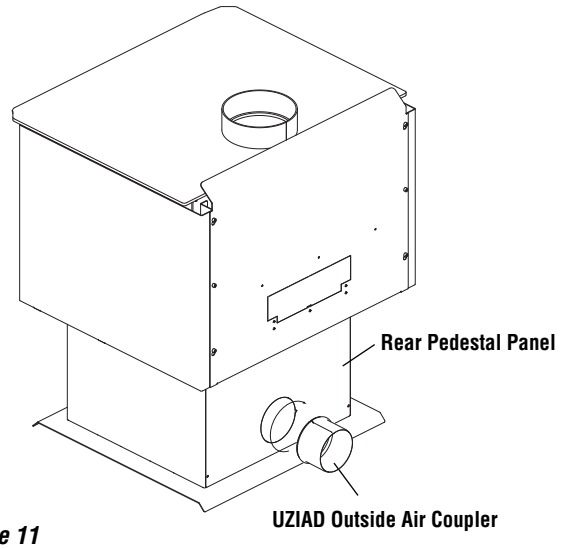


***Figure 11***

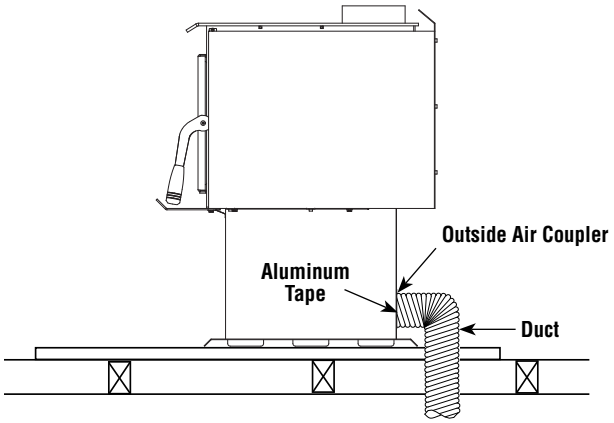


***Figure 12A - Outside Air Connection, Through the Floor***

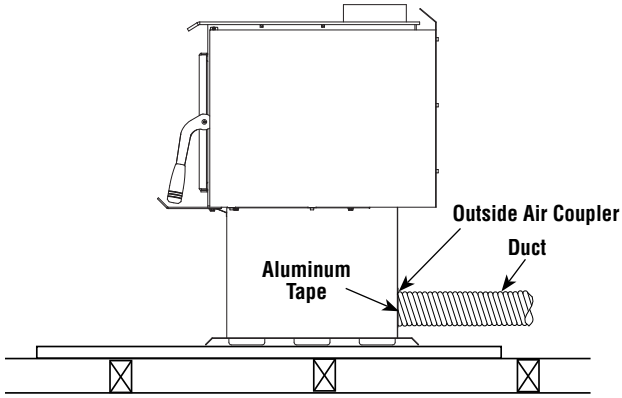


***Figure 12B - Outside Air Connection, Through the Wall***

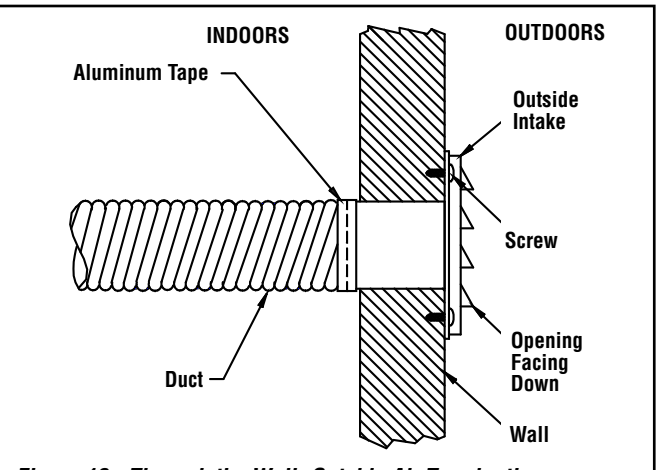


***Figure 13 - Through the Wall, Outside Air Termination***

**See *Figure 8 on Page 10* for additional Manufactured Home requirements.**



NOTE: DIAGRAMS & ILLUSTRATIONS ARE NOT TO SCALE.

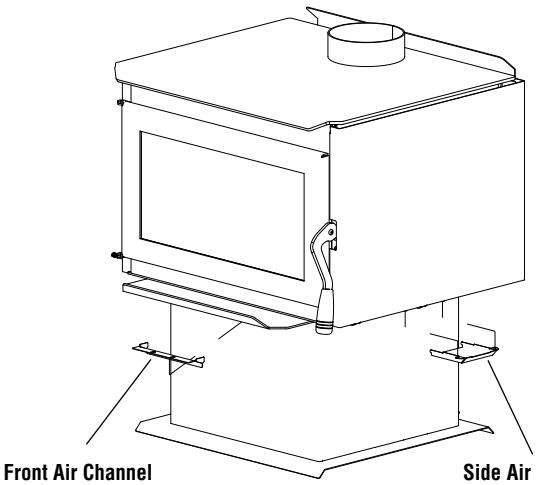


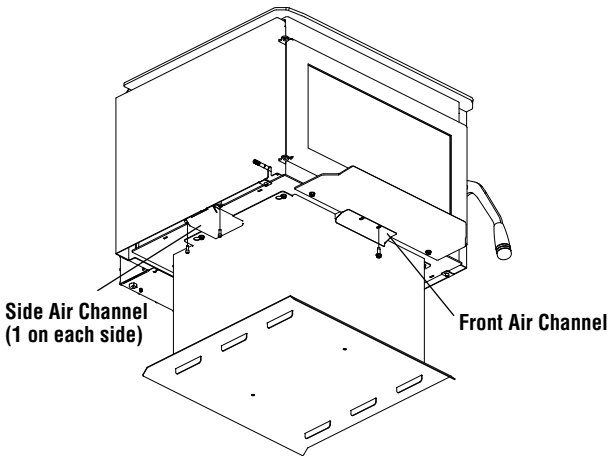


**Using the existing screws on the stove, install the front and side air channels as shown here.**

***Figure 14 - Install Front and Side Air Channels***

## BRICK INSTALLATION

**CAUTION: Wear gloves during brick installation in case of sharp edges inside the stove.**

Measure bricks before installing, as per list of dimensions in ***Figure 15***.

1. Install the brick as shown in ***Figure 15***.
2. The baffle boards are pre-installed. Ensure that they have not moved during shipping. Make sure all three baffle boards are resting on top of the secondary tubes, placed edge to edge, and positioned fully against the rear of the unit.

   **CAUTION: It is critical that baffle boards are fully against the rear of the unit.**

   These brick sizes may be slightly smaller to adjust for steel and firebrick tolerances beyond our control. Be sure to measure and mark bricks with their numbers when removing.

**WARNING: IF THE BRICKS ARE NOT INSTALLED EXACTLY AS SHOWN, THEY COULD FALL OUT OF PLACE DURING REFUELING OR BURNING OF THE STOVE CAUSING SERIOUS INJURY.**

**Firebox Brick Layout as Viewed from the Front**

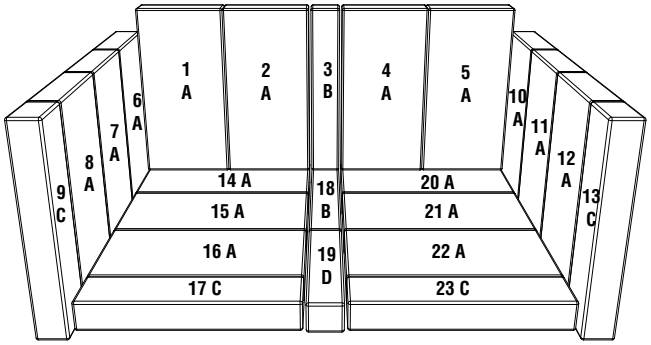


| Brick Sizes | |
|---|---|
| A = 4-1/2"x 9" | C = 2-1/8"x 9" |
| B = 1-1/2"x 9" | D = 1-1/2"x 6-3/4" |

*** Bricks 6 and 10 fit up against the back of the firebox.**

***Figure 15***

**Side Cut-A-Way View of Firebox**

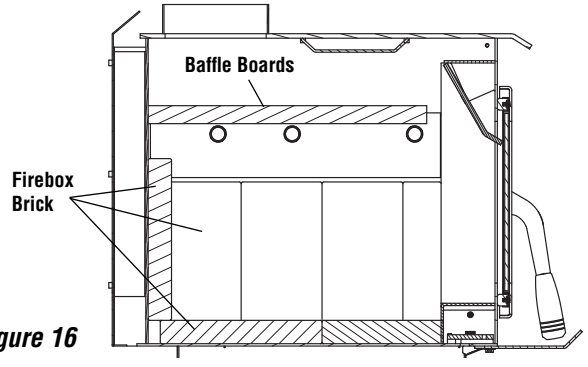


***Figure 16***



NOTE: DIAGRAMS & ILLUSTRATIONS ARE NOT TO SCALE.

## FOR MOBILE HOME INSTALLS:

- ☐ Be sure the stove is properly grounded
- ☐ Be sure the stove is properly securely fastened to the floor
- ☐ Be sure the outside air vent is free of obstructions and has a mesh screen in place



## POST INSTALLATION CHECKS

- ☐ Check that all chimney pipe joints are secured and installed according to the manufacturers instruction.
- ☐ If used, make sure the outside air kit is properly installed and unobstructed.
- ☐ Double check all stove clearances.
- ☐ Be sure bricks and baffle boards are properly installed.



**FOR YOUR OWN PROTECTION AND INSURANCE PURPOSES, HAVE YOUR CHIMNEY AND CONNECTOR PIPE INSTALLATION INSPECTED BY YOUR LOCAL BUILDING CODE AUTHORITY OR FIRE MARSHAL BEFORE STARTING A FIRE IN YOUR STOVE. NOTIFY YOUR INSURANCE COMPANY.**



NOTE: DIAGRAMS & ILLUSTRATIONS ARE NOT TO SCALE.

## PAINT CURING

**Do not close the door tightly during the "Burn-In Period." Also, open the door frequently (every 5-10 minutes) to keep the gasket from adhering to the curing paint.** Ventilate the house well during these first firings as the paint gives off carbon dioxide and unpleasant odors. It is recommended that persons sensitive to an imbalance in the indoor air quality avoid the appliance during the curing process.

Your new appliance is painted with a high temperature paint that cures during the first few firings. We recommend that you put your stove or fireplace insert through a regimen of three burns. The first two should last for 20 minutes each at 250 degrees (the appliance should be allowed to cool completely between each burn). The third should be a burn of at least 450 degrees F. for 45-60 minutes. The paint will become soft, gummy and emit non-toxic smoke during these burns. After the appliance cools down for the third time, the paint will harden. **DO NOT BUILD A LARGE ROARING FIRE UNTIL THIS CURING EFFECT IS COMPLETE OR YOU MAY DAMAGE THE FINISH OF YOUR STOVE.** Spray can touch-ups should be done only with a high temperature stove paint (cat. no. H8159), available from all IHP dealers.

## OPERATING HINTS

1. Burn only dry, well-seasoned cord wood. In some states it is illegal to burn wet wood or anything other than clean, dry wood products.
2. Your stove or fireplace insert is designed to operate with the door closed! Operate only with the door shut tightly at all times except when loading wood and possibly on start up to establish a draft. Never leave the unit unattended while the front door is opened.
3. **DO NOT** contact or move the baffle boards while loading wood. Occasionally check the baffle to assure that the boards are in there correct location.
4. **CAUTION: THE DRAFT CONTROL MUST BE FULLY OPEN BEFORE OPENING THE DOOR TO AVOID POSSIBLE COMBUSTION FLASH!!** (Ignition of hot volatile gases as the door is opened).
5. Feeding excessive amounts of fuel to the appliance should be avoided. It is important to supply it with sufficient draft and fuel to maintain a moderately hot fire. If, during overnight burns, heavy creosote deposits develop inside your stove and on the door, the draft is set too low - review your burning habits!

## DOOR OPERATION

**Do not operate the appliance with the door open or ajar other than possibly during start up to create a draft (Do not leave the unit unattended while the front door is slightly open during start up). Operating the appliance with the door open other than in initial start up if needed will produce extreme temperatures within the appliance. Damage caused from over-firing is not covered under the manufacturers limited warranty.**

### ⚠ WARNING

**Be careful not to abuse door assembly by striking or slamming it. If the door assembly or glass is broken or damaged, they must be replaced with factory original parts before heater can be safely operated. Use only components provided by the manufacturer as replacement parts.**

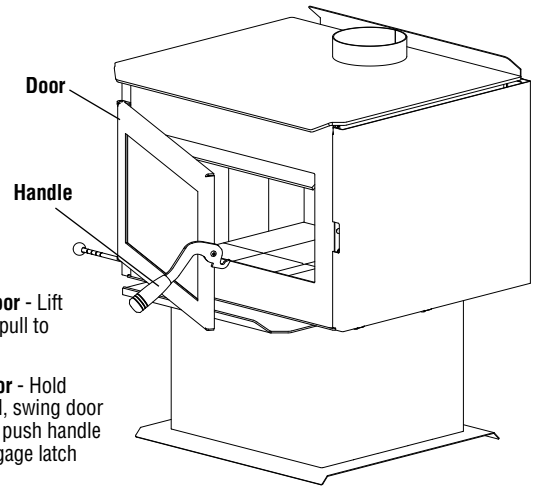


**Opening Door** - Lift handle and pull to open door

**Closing Door** - Hold handle lifted, swing door closed then push handle down to engage latch

***Figure 18***



NOTE: DIAGRAMS & ILLUSTRATIONS ARE NOT TO SCALE.

## STARTING AND MAINTAINING A FIRE

1. **NEVER USE FLAMMABLE LIQUIDS TO START OR REKINDLE A SOLID FUEL FIRE!!**
2. Fully open the primary draft control by placing draft control (wood handle located on left side of the stove) in the highest position. This control determines the amount of air entering the stove. Lowering this control reduces the burn rate of the stove.
3. Place a small amount of crumpled paper in the front of the firebox and cover it with a few pieces of kindling.
4. Light the paper and allow sufficient time for the kindling to become fully engulfed in flames. You will now close the wood units front door. Your wood units front door may or may not need to be left slightly open during this start up process, this depends on the stove model and the amount of draft present.
5. **When operating any wood burning appliance, it is important to become familiar with how the damper control affects heat output and the overall temperature of the appliance. A stove thermometer can be a helpful tool to help ensure you are not over-firing your appliance and it will also ensure you are burning fuel at a rate that is most efficient. Place a stove thermometer on the top of the appliance as shown in *Figure 19*. Monitor the temperature every 15 minutes or so until you become more familiar with your appliance. Close the damper all the way down if you begin to reach 600 degrees, as this is a sign that you are operating your appliance at too high a temperature.**

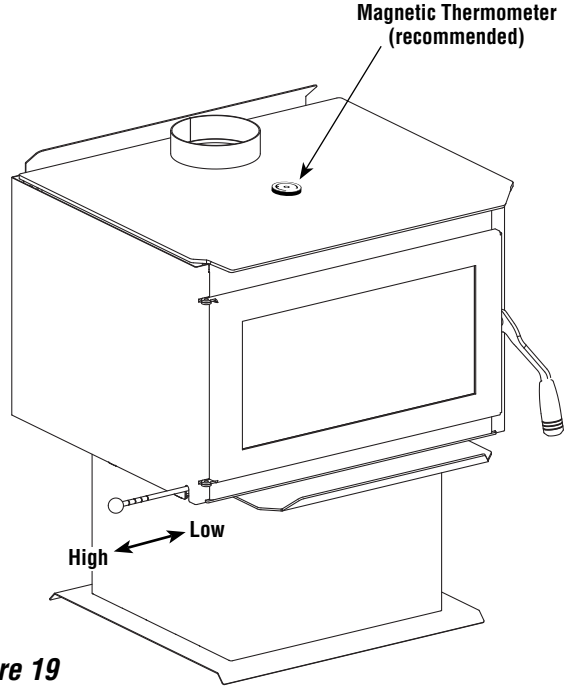


***Figure 19***

**DO NOT LEAVE THE STOVE UNATTENDED WHILE THE FRONT DOOR IS SLIGHTLY OPEN.**

**CAUTION: Do Not alter the adjustment range of the draft control for increased firing for any reason.**

**Operate only with fuel door closed. Maintain all seals in good condition. Do not operate with broken glass.**

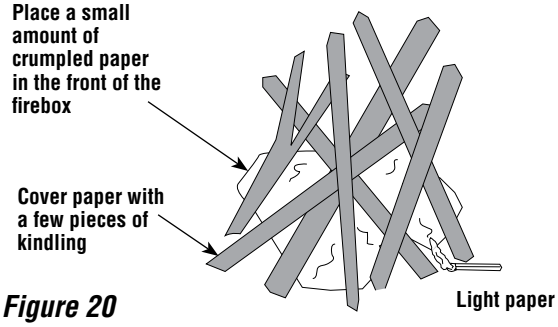


***Figure 20***

**SEE MAINTENANCE SECTION FOR GLASS CLEANING GUIDELINES AND TIPS FOR KEEPING THE GLASS CLEAN *(PAGE 22)*.**

6. Once kindling is burning well, larger pieces of wood may be added, then the door should be fully closed if there was the need to keep it slightly open during start up.
7. For best results, use smaller pieces of wood to get the appliance temperature very high before loading larger wood for sustained burns. If necessary, crack the door to allow ignition of the fuel charge. Now you can add larger pieces of wood and after several minutes of high burn, set the left control for the desired heat output. Check the exhaust in about 15 to 20 minutes *(see **Figure 22**)*. Large amounts of smoke indicate an improper burn setting (either too high or too low). Adjust and recheck in 5 to 10 minutes.

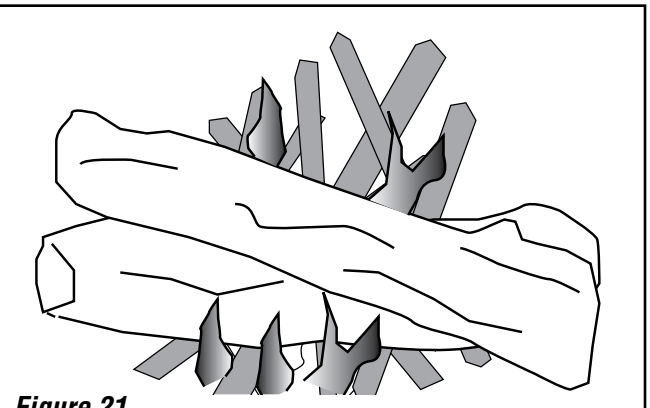

***Figure 21***



NOTE: DIAGRAMS & ILLUSTRATIONS ARE NOT TO SCALE.

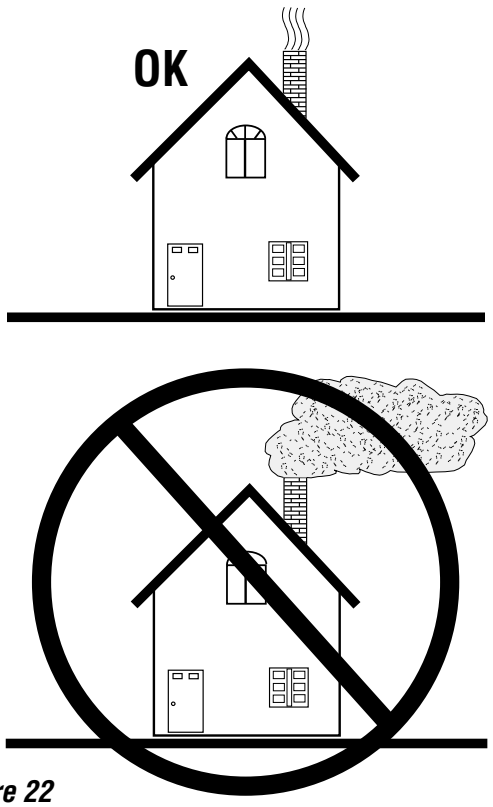


*Figure 22*

## FUEL

**This appliance is designed to burn dry seasoned natural wood only (see *Page 20* for a list of prohibited fuels). Failure to burn proper fuels only will void the certification and the warranty of the appliance.**

Dry, seasoned wood is that which has been cut, split and allowed to dry under a covered area where air is free to flow and circulate under and around the wood (not under a tarp or plastic). Make sure wood is not stacked directly on the ground, it may absorb moisture from the ground. It should be allowed to dry in these conditions for a minimum of six months, preferably one year or more. **IT MUST BE UNDERSTOOD THAT WOOD CANNOT BE LEFT IN ANY KIND OF WET OR DAMP AREA OR IT WILL NEVER BECOME COMPLETELY SEASONED.**

**Do not store fuel within space heater installation clearances or within the space required for refueling and ash removal.**

**DO NOT OVERFIRE THIS HEATER**

Attempts to achieve heat output rates that exceed heater design specifications can result in permanent damage to the heater.

**What does "Well-Seasoned" mean?**

When a tree is cut down, the wood is green, full of sap and moisture. This moisture content can exceed 80%, which must be reduced to less than 20%. Wood properly seasoned is then capable of generating the heat the stove was designed to provide.

Green wood does not burn easily. Attempting to burn green wood often results in a lot of smoke and very little fire. Time is the most important factor in seasoning wood. Ideally the moisture content should be reduced to 11-20%. ***NOTE: The use of a firewood moisture meter is recommended to ensure the firewood contains less than 20% moisture.***

**Seasoning Guide**
Softwoods – 6 months to 18 months
Hardwoods – 12 months to 24 months

Logs that are 5" diameter across or larger should be split in half, three pieces if over 8 inches, and four pieces when over a foot across. If a tree has been dead for 2 – 4 years it still needs to be cut, split, and seasoned for 6 to 24 months depending on the wood.

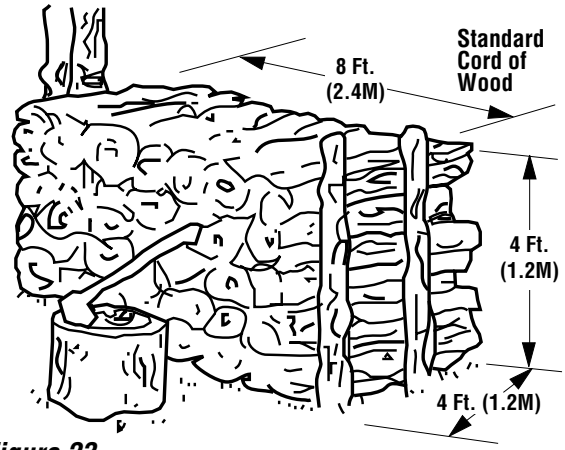


*Figure 23*



NOTE: DIAGRAMS & ILLUSTRATIONS ARE NOT TO SCALE.

## GETTING THE MOST OUT OF YOUR STOVE

Recent developments in wood-burning technology have made wood-burning a cleaner and more convenient way to heat your home. Overall efficiency in a wood-burning appliance is a combination of combustion efficiency and heat transfer efficiency. Whether heating your entire home or just a room or two, your understanding of how to best operate your stove or insert will enhance its overall efficiency and performance. What this can mean to you is longer, cleaner burns, less wood use and more heat.

The following sections will outline techniques you can use to "get the most out of your stove." Please read them carefully.

## MAXIMIZING YOUR STOVE'S OVERALL EFFICIENCY

**It is important to know that for clean highly efficient burns you will need to have sufficient temperatures inside the firebox for thorough combustion**. The best method for determining if you have sufficient temperatures is to watch the brick lining in your firebox. When you first light your stove or fireplace insert, the firebrick will turn a dark brown or black. After 20 to 30 minutes of a hot fire, most of the bricks should return to near their original beige color. This means the firebrick have reached a high enough temperature for your stove to achieve high combustion efficiency and you are ready to adjust the draft control to a lower setting.

**Second and just as important, is achieving a high level of heat transfer efficiency.** Slowing the rate of flow through the stove or insert enhances heat transfer, thus allowing more time for heat to be transferred into your home. To do this, be sure to thoroughly preheat your stove and then reduce the amount of primary air by closing the draft control down to a lower setting. (More air may produce a slightly greater amount of heat, but will greatly increase wood consumption).

To get the most out of your appliance, you will need to combine good combustion efficiency with good heat transfer practices. The following are some tips on how to operate your stove to achieve the highest overall efficiency.

1. Thoroughly preheat your stove before slowing the burn rate by closing the draft control.
2. When loading wood into a preheated stove or fireplace insert, allow a vigorous fire to build before lowering the draft control.
3. Operate your stove as much as possible in the low to medium burn ranges.
4. Do not lower the draft setting so low as to completely extinguish the flames in the firebox. Check for at least some small flames twenty minutes after setting the draft control.
5. Do not continually operate your stove or fireplace insert in the high (wide open) setting. This wastes wood by carrying a great deal of heat up the chimney and can damage your stove or fireplace insert and chimney.
6. Go outside and check your chimney. More than a very small amount of smoke indicates wasted heat, creosote build up and pollution *(see **Figure 22**)*.

## ACHIEVING CLEAN, LONG BURNS

**To achieve long burn times, after having thoroughly preheated the stove, load the firebox without blocking the small air opening found in the center front of the firebox.** At this point, you may need to burn the stove with the draft open for a few minutes to ignite the wood. All IHP stoves are EPA tested for emissions at low burn with the air control completely closed. Whether or not you should burn your stove with the air control completely closed will depend on the following factors:

- How you load your wood
- Your chimney type, height and draft
- Your wood type and its moisture content
- The temperature of the appliance
- Which model stove or insert you have

In order to maximize the burn time of your stove you may need to experiment to get the right balance of starting temperature, wood type, and draft control setting for your particular venting configuration. Do not reload the stove for long burns when the stainless secondary tubes or baffles are glowing red, or when the stove is uncomfortably hot to load. This indicates the stove is too hot to load for a long burn.



NOTE: DIAGRAMS & ILLUSTRATIONS ARE NOT TO SCALE.

## OPTIONAL BLOWER KIT

The optional blower is controlled by a Dial-a-Temp *(see **Figure 24**)*. It contains an On/Off line switch with variable speed control from low to high.

1) Install the optional blower kit per the instructions provided in the blower kit.
2) Plug the blower power cord into the receptacle on the bottom of the Dial-A-Temp.
3) Plug the connected Dial-A-Temp into a properly grounded, 120 VAC wall outlet.
4) To operate, rotate the dial on the Dial-A-Temp clockwise until it clicks on. Rotate the dial further clockwise for a lower speed, then counter-clockwise for a higher speed.

***NOTE: Turn blower off before opening the door to load the fuel.***

**⚠ WARNING**

**The blower must be plugged directly into a properly grounded three-prong receptacle, 120 VAC, 60 Hz, single phase. Do not cut or remove the grounding prong from this plug. Do not route power cord under or in front of appliance.**

**Installation must be in accordance with National Electrical Code, ANSI/NFPA 70 - latest edition. In Canada, the current CSA C22.1 Canadian Electrical Code - latest edition.**

**DANGER: Disconnect power before servicing blower.**

**OPTIONAL BLOWER KIT**

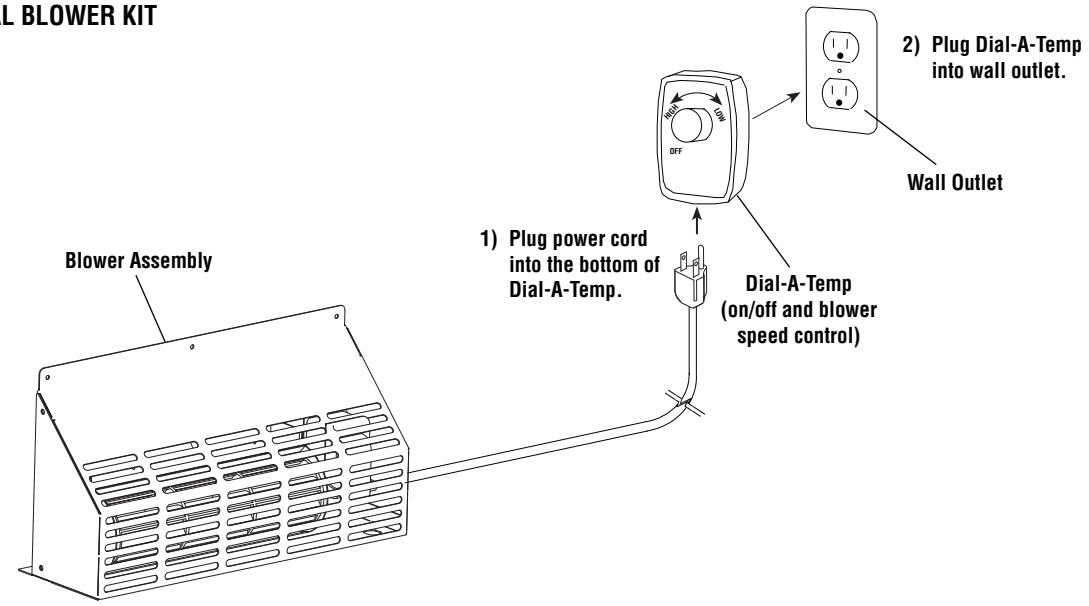


*Figure 24*

**⚠ WARNING**

**In the event that you remove the blower for any reason, the rear heatshield must be returned to its original condition or replaced before using the heater. Excessive rear wall temperatures will result if the stove is burned with the blower opening unobstructed.**



NOTE: DIAGRAMS & ILLUSTRATIONS ARE NOT TO SCALE.

## DO'S AND DON'TS

**DO NOT:** Install or operate the appliance before reading this manual.

**DO NOT:** Close the draft beyond the point at which the flames are completely extinguished.

**DO NOT:** Open the appliance door without **fully opening** the draft first.

**DO NOT:** Burn driftwood or wood that has been in salt water. This includes some mill ends and scrap lumber that has been floated in salt water on the way to the mill. (This will void your warranty).

**DO NOT:** Force oversized logs into the firebox as this may dislodge the baffle assembly.

**DO NOT:** Close the door tightly during Burn-In Period.

**DO:** Consult local building department if other than recommended clearances are desired.

**DO:** Read instructions for the baffle boards occasionally to ensure you have not bumped or moved them out of place when loading wood.

**DO**: Check the chimney and baffle monthly to make sure they are clean.

**DO**: Burn seasoned, dry wood only! (RAIN = WET WOOD)

**DO**: Open the door frequently during Burn-In Period to keep gasket from adhering to the curing paint.

**DO:** Enjoy the warm feeling of your new IHP appliance.

## SMOKE DETECTOR RECOMMENDED

Since there are always several potential sources of fire in any home, we recommend installing smoke detectors. If possible, install the smoke detector in a hallway adjacent to the room (to reduce the possibility of occasional false activation from the heat produced by these appliances). If your local code requires a smoke detector be installed within the same room, you must follow the requirements of your local code. Check with your local building department for requirements in your area.

## CARBON MONOXIDE MONITOR RECOMMENDED

**Carbon Monoxide Poisoning**: Early signs of carbon monoxide poisoning are similar to the flu with headaches, dizziness and/or nausea. If you have these signs, obtain fresh air immediately. Some people are more affected by carbon monoxide than others, including pregnant women, people with heart or lung disease or anemia, those under the influence of alcohol, and those at high altitudes.

**It is against federal regulations to operate wood heaters in a manner inconsistent with operating instructions in the manual.**

## PROHIBITED FUELS

This heater is designed to burn natural wood only. Higher efficiencies and lower emissions generally result when burning air dried seasoned hardwoods, as compared to softwoods or to green or freshly cut hardwoods. DO NOT BURN:

- **Garbage;**
- **Lawn clippings or yard waste;**
- **Materials containing rubber, including tires;**
- **Materials containing plastic;**
- **Waste petroleum products, paints or paint thinners, or asphalt products;**
- **Materials containing asbestos;**
- **Construction or demolition debris;**
- **Railroad ties or pressure-treated wood;**
- **Manure or animal remains;**
- **Salt water driftwood or other previously salt water saturated materials;**
- **Unseasoned wood;**
- **Christmas tree branches;**
- **Paper products, colored paper, cardboard, plywood, or particleboard;**
- **gasoline;**
- **naphtha;**
- **engine oil;**
- **flammable liquids;**
- **solvents;**
- **grease; or**
- **coal**

The prohibition against burning these materials does not prohibit the use of fire starters made from paper, cardboard, saw dust, wax and similar substances for the purpose of starting a fire in an affected wood heater.

Burning these materials may result in release of toxic fumes or render the heater ineffective and cause smoke. Intense firing with these materials may overheat the fireplace, causing damage to the unit, a fire or even possibly igniting a chimney fire if the chimney is creosoted. Burning unapproved fuel, resulting in excessive pollutants being emitted, may be prohibited and subject to a fine or other penalty by the authority having jurisdiction in your area.

## MAINTENANCE

**Have your product inspected at least once a year by a qualified service technician to ensure gaskets, air tubes, baffles, and venting are in good repair to ensure proper performance. Have degraded items replaced by a qualified service technician.**

**THIS WOOD HEATER NEEDS PERIODIC INSPECTION AND REPAIR FOR PROPER OPERATION. IT IS AGAINST FEDERAL REGULATIONS TO OPERATE THIS WOOD HEATER IN A MANNER INCONSISTENT WITH OPERATING INSTRUCTIONS IN THIS MANUAL.**

**DOOR HINGES:** If door hinges need lubricating, use an anti-seize compound (never use oil) available from your IHP dealer.

**DOOR LATCH:** Adjustment Instructions -

1. Using a 5/32" hex wrench, remove the side heat shield by removing 3 screws on the back, 2 screws on the bottom, and 1 screw at the top-front corner.
2. With the door open, loosen the latch nuts using a 3/8" wrench. Slide the latch assembly forward to loosen the door and backward to tighten the door.
3. Secure the nuts in place and test the door. If more adjustment is required, repeat step 2.
4. Replace the heat shield before burning the stove.

The hinge side of the door can also be adjusted if necessary. Repeat the procedure above on the hinge side of the stove.

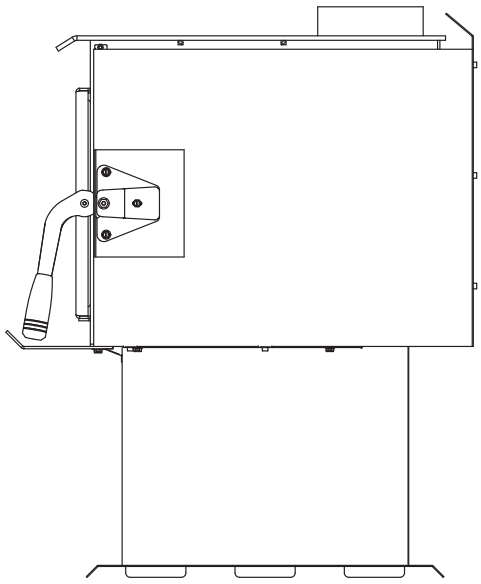

*Figure 27*

**DOOR GASKET:** Periodically check gasket to make sure it is not over-compressed. If compressed, replace with a special woven door rope. (Don't try substituting rope, only use IHP door rope).

**BAFFLE BOARDS:** Your baffle boards should be inspected during every chimney cleaning. If either board is damaged then replace baffle boards.

### CREOSOTE FORMATION AND NEED FOR REMOVAL

When wood is burned slowly, it produces tar and other organic vapors, which combine with expelled moisture to form creosote. The creosote vapors condense in the relatively cool chimney flue of a slow-burning fire. As a result, creosote residue accumulates on the flue lining. When ignited, this creosote makes an extremely hot fire.

The chimney and chimney connector should be inspected at least once monthly during the heating season to determine if a creosote buildup has occurred. If creosote has accumulated (1/8" [3 mm] or more), it should be removed to reduce the risk of a chimney fire.

**Establish a routine for the fuel, wood burner and firing technique. Check daily for creosote build-up until experience shows how often you need to clean to be safe. Be aware that the hotter the fire the less creosote is deposited, and weekly cleaning may be necessary in mild weather even though monthly cleaning may be enough in the coldest months. Contact your local municipal or provincial fire authority for information on how to handle a chimney fire. Have a clearly understood plan to handle a chimney fire.**

### DISPOSAL OF ASHES

**Whenever ashes get 3 to 4 inches deep in your firebox, and when the fire has burned down and cooled, remove excess ashes. Leave an ash bed approximately 1 inch deep on the firebox bottom to help maintain a hot charcoal bed.**

Ashes should be scooped out of a cool stove or fireplace insert with a small metal shovel. Ashes should be placed in a steel container with a tight fitting lid and moved outdoors immediately. Other waste shall not be placed in this container. The closed container of ashes should be placed on a non-combustible floor or on the ground, well away from all combustible materials, pending final disposal. If the ashes are disposed of by burial in soil or otherwise locally dispersed, they should be retained in the closed container until all the cinders have thoroughly cooled. Ashes can ignite up to 72 hours after removal from the appliance.

**⚠ WARNING**

**Inspect and clean chimney and connector frequently. Under certain conditions of use, creosote buildup may occur rapidly.**

# MAINTENANCE

**GLASS REPLACEMENT INSTRUCTIONS**
*(Refer to **Figure 26**)*

**Step 1. Remove Door Assembly** - Remove the upper and lower hinge pins by pressing the bottom of each hinge pin up, then pull out from the top. Lift off door and place face down on a soft surface.

**Step 2. Remove Glass Retainer Nuts (10 ea.)** - Using an 3/8" nut driver or wrench remove the ten glass retainer nuts. To locate nuts, peel back the door gasket as necessary.

**Step 3. Remove Glass** - Carefully remove broken glass one piece at a time (protective leather gloves are recommended).

**Step 4. Clean Door Frame** - Clean the area of the door frame where the new glass with gasket will be installed.

**Step 5. Install New Glass Assembly** - Install the new glass with gasket (use only factory supplied 5mm ceramic glass with gasket. Do not substitute).

**Step 6. Reinstall Retainer and Nuts** - Carefully reinstall the glass retainer and nuts. Be very careful not to overtighten the nuts (this could result in glass breakage when the stove is hot).

**Step 7. Reinstall Door** - Align hinges on door frame with corresponding hinge holes on the face of stove. Reinstall the upper and lower hinge pins from the top.

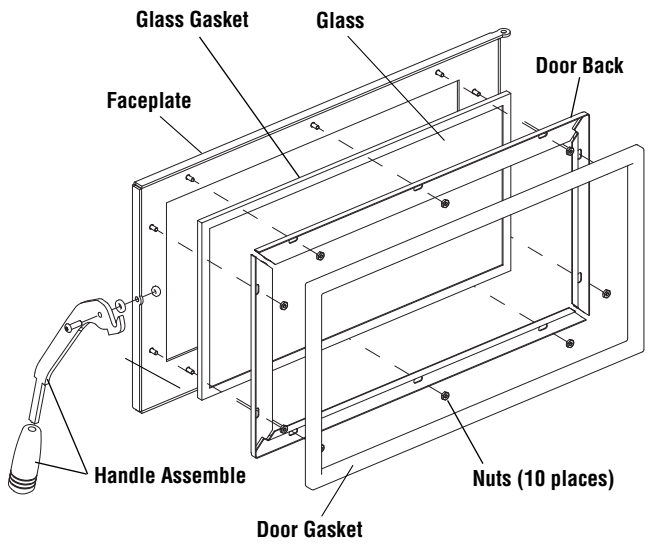


***Figure 26 - Glass Replacement***

**GLASS CLEANING GUIDELINES**

**WARNING: DO NOT CLEAN GLASS WHEN APPLIANCE IS HOT!**
Glass on any wood stove will not stay perfectly clean. Here are some guidelines for cleaning and caring for the glass:

- **Ensure the stove is cold prior to cleaning glass.**
- This appliance is designed to provide a flow of air over the inside of the glass, where along with high heat helps inhibit build-up on the glass. When build-up occurs, a commercial glass cleaner designed for stoves is recommended. Regular household glass cleaners will not clean creosote.
- Do not use abrasives such as steel pads, steel wool or oven cleaner as they will scratch the glass. Never scrape glass with a razor blade as this may pit the glass and make it impossible to clean in the future.
- Do not use chemical glass cleaners as they may damage the gaskets or painted surfaces.

**TIPS FOR KEEPING THE GLASS CLEAN**

- Burn only dry seasoned cord wood. **Wet wood = Dirty glass.**
- A short, hot fire (15 - 20 minutes) may help to clean off some of the normal buildup. **Lower burns = more build-up. Higher burns = less build-up.**
- Keep freshly loaded wood away from the glass.
- After reloading, allow all the wood to catch flame before dampering down the stove.

**⚠ CAUTION**

**Cleaning Glass: Ensure appliance is cold prior to cleaning glass. A commercial glass cleaner designed for stoves is recommended. Do not use abrasive cleaners. Do not clean with any materials, which may scratch or otherwise damage the glass. Scratches on the glass can develop into cracks or break. Inspect the glass regularly. If you detect a crack, extinguish the fire and contact your dealer for a replacement.**

# TROUBLESHOOTING

| Problem | Solution |
|---|---|
| **POOR DRAFT:** | Extend chimney in length or have the chimney realigned to the proper size flue. Oversized chimneys normally have poor drafts. Remember, the appliances' draft depends solely on the natural draft of the chimney (See Draft Requirements on ***Page 4***). If your stove or fireplace insert is not drafting properly, your chimney is the problem. All stoves are thoroughly tested to ensure proper draft with the correct size chimney flue. |
| **EXCESSIVE DRAFT:** | With better chimneys being more common, excessive draft can be an issue. Alleviate excessive draft by slowing the burn rate of the appliance once it has reached proper operating temperature (See Maximizing Your Stoves Overall Efficiency on ***Page 18***). |
| **DIRTY GLASS:** | 1) Burn smaller, hotter fires and check to make sure you are not setting the draft down too far with the draft control.<br>2) Make sure your wood is well-seasoned and dry (not open to rain - see Creosote and Fuel sections on ***Page17 and 22***).<br>3) See Poor Draft section (above) and Cleaning Glass on ***Pages 4 and 22***. |
| **SMOKES WHEN DOOR IS OPEN:** | 1) If smoke is entering the room, check to make sure your baffle boards are properly installed.<br>2) Check the chimney for blockage due to creosote (see Chimney and Creosote sections on ***Page 22***).<br>3) Check draft (See POOR DRAFT section above). |
| **WOOD BURNS TOO FAST:** | 1) The draft control must be closed further.<br>2) Add fuel at lower firebox temperatures.<br>3) Load wood side to side and reduce the flow of air under wood.<br>4) The door seal may need replacing, check for leakage.<br>5) See "Excessive Draft." |
| **POOR HEAT OUTPUT:** | 1) Check your wood. Wet, moist, unseasoned wood will not produce heat.<br>2) Your stove or fireplace insert needs to be seasoned (moisture removed from the steel and brick). Continue to burn a fire. It normally takes from one to three weeks of burning to season your stove (See Burn-In Period on ***Page 15***).<br>3) See Excessive Draft section above. |
| **PAINT GIVES OFF ODOR (smoke):** | Paint is tempering-in. Burn only moderately hot for the first few days until paint is fully cured.<br>Then burn a very hot fire to cure any paint that may not easily cure. Open windows or door to ventilate (See Burn-In Period on ***Page 15***). |

# REPLACEMENT PARTS - MODEL WXS2021WS

**Contact an IHP dealer to obtain any of these parts. Never use substitute materials. Use of non-approved parts can result in poor performance and safety hazards.**

| Cat. No | Description |
|---|---|
| H8890 | Right side heat shield |
| H8891 | Left side heat shield |
| H8892 | Back heat shield |
| H8893 | Door back w/pins |
| H8894 | Door channels w/nuts |
| H8895 | Glass |
| H5640 | Glass gasket kit (8’ 4”) |
| H5639 | Door rope kit, 7/8” dia. (6’ 2”) |
| H8897 | Baffles |
| H8898 | Secondary burn tubes w/clamps |
| H5650 | Draft rod knob |
| H8899 | Ash lip w/hardware |
| H8900 | Pedestal |
| H8901 | Door handle w/hardware |
| H8902 | Door latch w/hardware |
| H8896 | Complete Firebrick kit |

# ACCESSORIES - MODEL WXS2021WS

| OPTIONAL ACCESSORIES | | |
|---|---|---|
| Cat. No. | Model | Description |
| BLOWER | | |
| H8873 | BLWR-ES-S-150 | Blower Kit, WXS2021WS |
| OUTSIDE AIR KIT | | |
| UZIAD | UZIAD | Outside Air Coupler Kit (connects outside air ducting, UZI, to stove) AND - |
| UZI | UZI | Outside Air Ducting Kit (includes 4" insulated flex x 10' long) AND - |
| H8874 | OUTAIRKIT-ES | Outside Air Panel and Air Channel Kit (includes rear pedestal panel and side and front air channels) |
| MISC. | | |
| H8159 | TSPK-B | Touch-Up Paint , Metallic Black, 12 oz. Aerosol |

## OPTIONAL BLOWER KIT

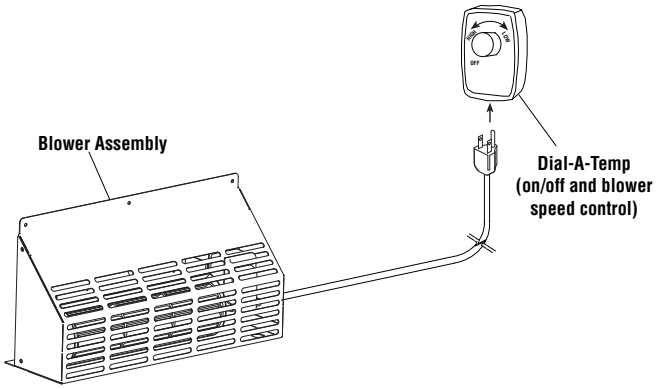


## OUTSIDE AIR KITS

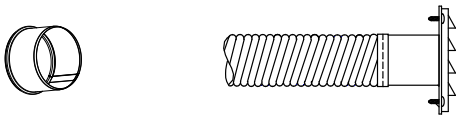

UZIAD UZI

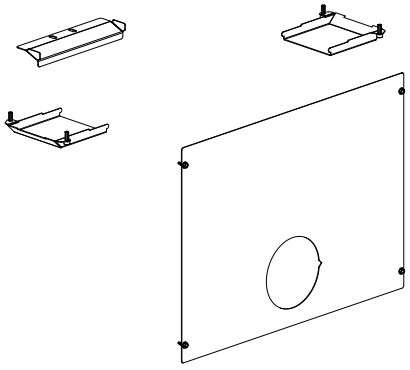

H8874

## TOUCH-UP PAINT






NOTE: DIAGRAMS & ILLUSTRATIONS ARE NOT TO SCALE.

# SAFETY / LISTING LABEL - MODEL WXS2021WS

CONTACT LOCAL BUILDING OR FIRE OFFICIALS ABOUT RESTRICTIONS AND INSTALLATION INSPECTION IN YOUR AREA. ROOM HEATER, SOLID FUEL TYPE, ALSO FOR USE IN MOBILE HOMES PURSUANT TO (UM) 84-HUD.
COMMUNIQUEZ AVEC LES AUTORITÉS LOCALES EN BÂTIMENT OU LE SERVICE DE PRÉVENTION DES INCENDIES POUR CONNAÎTRE LES NORMES D'INSTALLATION ET D'INSPECTION DE VOTRE RÉGION. APPAREIL DE CHAUFFAGE CERTIFIÉ POUR COMBUSTIBLE SOLIDE PEUT-ÊTRE INSTALLÉ DANS UNE MAISON MOBILE SELON (UM) 84-HUD

Superior FIREPLACES®

| Report No./Numéro de Rapport 14-193 | Model / Modèle WXS2021 | Serial No./Numéro de sérle: WXS2021- |
|---|---|---|

Manufactured By / Fabriqué Par:
Innovative Hearth Products
1502 14th St NW
Auburn, WA 98071 USA

Tested to: UL 1482, ULC S627-00
Type Of Fuel: Solid Wood Only
Optional Blower, Part No. H8873, Model BLWR-ES-S-150
Blower Electrical Rating: 120\ z, 1 Amp
Do not route power cord under or in front of appliance.
Replace glass only with 5mm ceramic.
Operate only with doors closed.
Do not obstruct the space beneath the heater.

PFS C US 14-193

Tested to/Testé selon: UL 1482, ULC S627-00
Type de combustible: Bois seulement
Ventilateur Optionnel, No. De Pièces: H8873, Modèle BLWR-ES-S-150
Spécification Électrique Du Venti ır: 120V, 60 Hz, 1 Amp
Ne pas faire passer le fil électrique sous ou en avant de l'appareil
Remplacez la vitre seulement avec la céramique de 5 millimètres.
Faire functionner uniquement lorsque les portes sont fermées.
Ne pas obstruer l'espace sous la bouche de chaleur.

Certification test emission value 3.05 g/hr per 2015 standard.

This wood heater needs periodic inspection and repair for proper operation. Consult the owner's manual for further information. It is against federal regulations to operate this wood heater in a manner inconsistent with the operating instructions in the owner's manual.

Valeur d'émission du test d'homologation 3,05 g/h selon la norme 2015

Cet appareil de chauffage au bois doit être inspecté et entretenu périodiquement pour fonctionner correctement. Voir le manuel du propriétaire pour plus d'information. L'utilisation de cet appareil de chauffage au bois de manière incompatible avec les instructions du manuel du propriétaire constitue une infraction aux régulations fédérales.

## "PREVENT HOUSE FIRES"

Install and use only in accordance with manufacturer's installation and operating instructions and your local building codes.

CAUTION: Special methods are required when passing chimney through a wall or ceiling, refer to installation instructions and local building codes. Do not connect this unit to a chimney flue serving another appliance.

CAUTION: Moving Parts May Cause Injury. Do Not Operate Unit With Blower Cover Removed.

WARNING: Burning improper fuel (e.g. charcoal) can result in carbon monoxide poisoning, which may lead to death!

WARNING: (MOBILE HOME USA Only) An outside air inlet must be provided for combustion, and be unrestricted while unit is in use. Do not install appliance in a sleeping room. The structural integrity of the mobile home floor, walls and ceiling/roof must be maintained. Approval void when label is missing.

## "PREVENTION DES INCENDIES"

Installer et utiliser l'appareil en conformité avec les directives d'installation du fabricant et des autorités locales en bâtiment ou le service de prévention des incendies.

ATTENTION : Prenez des précautions spéciales lorsque vous faites passer une cheminée à travers un mur ou un plafond, référez-vous aux instructions d'installation et aux codes locaux de la construction. Ne pas brancher cette unité à un conduit de fumée raccordé à un autre appareil.

ATTENTION : Des pièces en mouvement peuvent causer des blessures. Ne pas opérer le ventilateur avec son protecteur retiré.

AVERTISSEMENT : La combustion d'un combustible inadapté (charbon) peut provoquer une intoxication au monoxyde de carbone et entraîner la mort !

AVERTISSEMENT : (MAISON MOBILE USA seulement) Une entrée d'air extérieure doit être installée et libre de toute restriction lors de l'utilisation de l'appareil. Ne pas installer l'appareil dans une chambre à coucher. L'intégrité structurale du plancher, des murs et du plafond/toit de la maison mobile doivent être maintenus.

CHIMNEY & CONNECTOR: Minimum 6" diameter, minimum 24 MSG black steel connector pipe with UL103HT listed factory-built chimney suitable for use with solid fuels or masonry chimney. Horizontal connection not tested, refer to local building codes for installation. Clearances to connector shall be measured from 6" flue collar. Restrictions apply! Read instructions before installing.

Mobile Home approved Class A - UL 103HT chimney and double wall connectors:
• Security • Jakes Evans/GSW • Dura-Vent
• Metal Fab • Ameri-Tec • Metalbestos • IndustrialChimney

RESIDENTIAL chimney systems must be from the same brands as listed for mobile homes but connector pipe may be double wall or single wall.

Connector pipe and chimney must be of the same brand.

If optional blower is NOT used, Rear Heat Shield Block Off Plate shall be in place.

CHEMINÉE ET TUYAU CONNECTEUR : Approuvé pour raccordement avec un conduit de raccordement en acier noir 24 jauges minimum de 6" de diamètre et une cheminée préfabriquée certifiée pour combustible solide ou une cheminée de maçonnerie. Non certifié pour installation horizontale, référez-vous aux autorités locales en bâtiment. Des restrictions s'appliquent! Lisez les directives avant d'effectuer l'installation.

MAISON MOBILE (USA SEULEMENT) : cheminée certifiée Classe A – UL103HT et tuyaux connecteurs doubles parois :
• Security • Jakes Evans/GSW • Dura-Vent
• Metal Fab • Ameri-Tec • Metalbestos • Industrial Chimney

RÉSIDENTIEL: Cheminée de la même marque de commerce que pour les maisons mobiles ci-dessus, mais le tuyau connecteur peut-être à double ou simple parois.

Le tuyau connecteur et la cheminée doivent être de la même marque de commerce.

Si l'option du ventilateur n'est pas utilisé, la plaque arrière coupe radiation doit être en place.

Made in U.S.A.
Fabriqué aux U.S.A.

DO NOT REMOVE THIS LABEL
NE PAS ENLEVER OU RECOUVRIR CETTE ÉTIQUETTE

Part No./No. Pièce 900404-00

Date of Manufacture / Date De Fabrication

| 2018 | 2019 | 2020 | JAN JANV | FEB FEVR | MAR MARS | APR AVR | MAY MAI | JUN JUIN | JUL JUIL | AUG AOÛT | SEP SEPT | OCT OCT | NOV NOV | DEC DEC |
|---|---|---|---|---|---|---|---|---|---|---|---|---|---|---|
| ■ | ■ | ■ | ■ | ■ | ■ | ■ | ■ | ■ | ■ | ■ | ■ | ■ | ■ | ■ |

U.S. ENVIRONMENTAL PROTECTION AGENCY
Certified to comply with 2015 particulate emission standards. Not approved for sale after May 15, 2020.

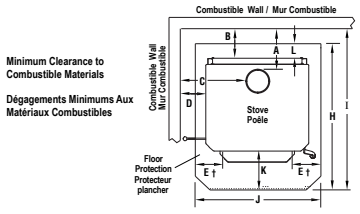


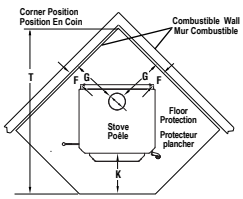


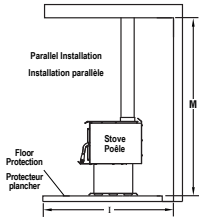


| | PIPE | INSTALLATION | A | B | C | D | E | F | G | H | I | J | K | L | M | T |
|---|---|---|---|---|---|---|---|---|---|---|---|---|---|---|---|---|
| USA inches (millimeters) | Single Wall / Simple Paroi | Residential / Résidentielle | 14-1/4 (362) | 11-1/2 (292) | 23 (584) | 13-3/8 (340) | 8 (200) | 9 (229) | 18 (457) | 37-5/8 (956) | 49 (1245) | 34-7/8 (886) | 16 (406) | 0 (0) | 84 (2134) | 61-1/2 (1562) |
| | Double Wall / Double Parois | Residential or Mobile Home / Résidentielle ou maisons mobiles | 12 (305) | 9-1/8 (232) | 19-1/2 (495) | 9-5/8 (245) | 8 (200) | 6 (152) | 15 (381) | 37-5/8 (956) | 46-3/4 (1188) | 34-7/8 (886) | 16 (406) | 0 (0) | 84 (2134) | 57-1/2 (1461) |
| | PIPE | INSTALLATION | A | B | C | D | E | F | G | H | I | J | K | L | M | T |
| Canada pounces (millimètres) | Single Wall / Simple Paroi | Residential / Résidentielle | 14-1/4 (362) | 11-1/2 (292) | 23 (584) | 13-3/8 (340) | 8 (200) | 9 (229) | 18 (457) | 47-5/8 (1210) | 51 (1295) | 40-7/8 (1038) | 18 (450) | 8 (200) | 84 (2134) | 63-1/2 (1613) |
| | Double Wall / Double Parois | Residential or Mobile Home / Résidentielle ou maisons mobiles | 12 (305) | 9-1/8 (232) | 19-1/2 (495) | 9-5/8 (245) | 8 (200) | 6 (152) | 15 (381) | 47-5/8 (1210) | 48-3/4 (1238) | 40-7/8 (1038) | 18 (450) | 8 (200) | 84 (2134) | 59-1/2 (1511) |

† USA=8" (200mm) from door opening, Canada=8" (200mm) from sides and back of unit

FLOOR PROTECTOR: The hearth and/or floor protection must be a non-combustible hearth/floor protector with a minimum thickness of 3/8" (9.5mm), extending beneath the heater and to the front, sides, and rear as indicated.

SUITABLE FOR MOBILE-HOME INSTALLATION.

NOTICE: All mobile home installations require outside air kits (H8874).

Clearance dimensions are to flue collar.

† USA= 8" (200mm) à l'avant de la porte, Canada 8" de chaque côté de l'appareil.

PANNEAU PROTECTEUR PLANCHER : Les panneaux protecteurs doivent être non combustible, dont l'épaisseur minimale est de 3/8" (9.5mm) et doivent s'étendre sous l'appareil, à l'avant des portes, à l'arrière et de chaque côté tel qu'indiqué.

CONÇU POUR MAISONS MOBILES.

AVIS: USA SEULEMENT - Toutes les installations dans une maison mobile requièrent un ensemble de prise d'air extérieur (H8874).

Les distances de dégagement sont pour un conduit de 6".

## CAUTION

HOT WHILE IN OPERATION. DO NOT TOUCH, KEEP CHILDREN, CLOTHING AND FURNITURE AWAY. CONTACT MAY CAUSE SKIN BURNS. SEE NAME-PLATE AND INSTRUCTIONS. DO NOT OVERFIRE - IF HEATER OR CHIMNEY CONNECTOR GLOWS, YOU ARE OVERFIRING. INSPECT AND CLEAN CHIMNEY FREQUENTLY - UNDER CERTAIN CONDITIONS OF USE, CREOSOTE BUILDUP MAY OCCUR RAPIDLY. DO NOT USE GRATE OR ELEVATE FIRE - BUILD WOOD FIRE DIRECTLY ON HEARTH. FEED DOOR MUST BE CLOSED DURING FIRING EXCEPT WHEN ADDING FUEL. KEEP ASH DOOR CLOSED TO AVOID EXCESS HEAT. DANGER: RISK OF ELECTRICAL SHOCK. DISCONNECT POWER BEFORE SERVICING UNIT. FOR USE WITH SOLID WOOD FUEL ONLY.

## ATTENTION

L'APPAREIL EST CHAUD LORS DE L'OPÉRATION. NE PAS Y TOUCHER. RISQUE DE BRÛLURES CUTANÉES. TENIR LES ENFANTS, LES MATÉRIAUX COMBUSTIBLES, LES VÊTEMENTS ET LES MEUBLES ELOIGNÉS DE L'APPAREIL. VOIR LA PLAQUE SIGNALÉTIQUE ET LES DIRECTIVES. NE PAS SURCHAUFFER L'APPAREIL. SI L'APPAREIL OU LE TUYAU DE CHEMINÉE ROUGIT, VOUS SURCHAUFFEZ. INSPECTER ET NETTOYER LA CHEMINÉE ET LE TUYAU CONNECTEUR FRÉQUEMMENT. SOUS CERTAINES CONDITIONS, IL SE PEUT QUE LE CRÉOSOTE S'ACCUMULE RAPIDEMENT. NE SURÉLEVER PAS LE FEU À L'AIDE D'UN CHENET. DÉPOSER LES BÛCHES DE BOIS DIRECTEMENT SUR L'ÂTRE. LA PORTE DOIT ÊTRE FERMÉE PENDANT L'USAGE SAUF POUR ALIMENTER LE FEU. GARDER LA PORTE "BY-PASS" (CENDRES) FERMÉE POUR ÉVITER DE SURCHAUFFER. DANGER: RISQUES DE DÉCHARGE ÉLECTRIQUE. DÉCONNECTER LE FIL ÉLECTRIQUE DE LA PRISE DE CONTACT AVANT LE SERVICE. NE PAS FAIRE PASSER LE FIL ÉLECTRIQUE SOUS OU EN AVANT DE L'APPAREIL. POUR USAGE AVEC LE BOIS SEULEMENT.

# Innovative Hearth Products
# Superior® Brand Wood-Burning Stove and Insert
# 5 Year Limited Warranty

**THE WARRANTY**

Innovative Hearth Products ("IHP") 5 Year Limited Warranty warrants your Superior® Brand wood stove or insert ("Product") to be free from defects in materials and workmanship at the time of manufacture. The Product body, firebox, removable air tubes and ceramic glass carry the 5 Year Limited Warranty. Ceramic glass carries the 5 Year Limited Warranty against thermal breakage only. After installation, if covered components manufactured by IHP are found to be defective in materials or workmanship during the 5 Year Limited Warranty period and while the Product remains at the site of the original installation, IHP will, at its option, repair or replace the covered components. If repair or replacement is not commercially practical, IHP will, at its option, refund the purchase price or wholesale price of the IHP product, whichever is applicable. IHP will also pay IHP prevailing labor rates, as determined in its sole discretion, incurred in repairing or replacing such components for up to one year. THERE ARE EXCLUSIONS AND LIMITATIONS to this 5 Year Limited Warranty as described herein.

**COVERAGE COMMENCEMENT DATE**

Warranty coverage begins on the date of purchase. In the case of new home construction, warranty coverage begins on the date of first occupancy of the dwelling or six months after the sale of the Product by an independent IHP dealer/distributor, whichever occurs earlier. The warranty shall commence no later than 24 months following the date of product shipment from IHP, regardless of the installation or occupancy date.

**EXCLUSIONS AND LIMITATIONS**

This 5 Year Limited Warranty applies only if the Product is installed in the United States or Canada and only if operated and maintained in accordance with the printed instructions accompanying the Product and in compliance with all applicable installation and building codes and good trade practices.

This warranty is non-transferable and extends to the original owner only. The Product must be purchased through a listed supplier of IHP and proof of purchase must be provided. The Product body and firebox carry the 5 Year Limited Warranty from the date of installation. Vent components, trim components and paint are excluded from this 5 Year Limited Warranty. The following are warranted as follows:

**Cast iron parts** – Replacement for one year from the date of installation
**Electrical components** – Repair or replacement for one year from date of installation
**Gaskets** – Replacement for one year from the date of installation
**Refractory & screens** – Replacement for two years from date of installation. Excludes hairline cracks
**Removable air tubes** – Repair or replacement for five years from date of installation. IHP prevailing labor rates for one year from the date of installation.
**Labor coverage** – Prevailing IHP labor rates apply for the warranty period of the component, unless otherwise noted Parts not otherwise listed carry a 90 day warranty from the date of installation.

**Whenever practicable, IHP will provide replacement parts, if available, for a period of 10 years from the last date of manufacture of the Product.**

IHP will not be responsible for: (a) damages caused by normal wear and tear, accident, riot, fire, flood or acts of God; (b) damages caused by abuse, negligence, misuse, or unauthorized alteration or repair of the Product affecting its stability or performance. (The Product must be subject to normal use with approved fuels listed in the Operation Manual provided with the product. Fuel products with abnormal burning characteristics, including but not limited to fuel such as driftwood, coal or plywood and wood products using a binder may burn at excessive temperatures and may cause damage to the Product or may cause it to function improperly; IHP stoves and inserts are approved for burning dry seasoned wood only.); (c) damages caused by failing to provide proper maintenance and service in accordance with the instructions provided with the Product; (d) damages, repairs or inefficiency resulting from faulty installation or application of the Product.

Coverage of this 5 Year Limited Warranty is conditional upon the appliance being operated without the use of grates, irons or any other method to elevate the fire.

IHP is not responsible for inadequate system draft caused by air conditioning and heating systems, mechanical ventilation systems, or general construction conditions which may generate negative air pressure in the room in which the appliance is installed. Additionally IHP assumes no responsibility for smoking conditions caused by inadequate chimney height, adjoining trees or buildings, adverse wind conditions or unusual environmental factors and conditions.

This 5 Year Limited Warranty covers only parts and labor as provided herein. In no case shall IHP be responsible for materials, components or construction which are not manufactured or supplied by IHP or for the labor necessary to install, repair or remove such materials, components or construction. Additional utility bills incurred due to any malfunction or defect in equipment are not covered by this 5 Year Limited Warranty. All replacement or repair components will be shipped F.O.B. from the nearest stocking IHP factory.

**LIMITATION ON LIABILITY**

It is expressly agreed and understood that IHP's sole obligation and the purchaser's exclusive remedy under this warranty, under any other warranty, expressed or implied, or in contract, tort or otherwise, shall be limited to replacement, repair, or refund, as specified herein.

In no event shall IHP be liable for any incidental or consequential damages caused by defects in the Product, whether such damage occurs or is discovered before or after replacement or repair, and whether such damage is caused by IHP's negligence. IHP has not made and does not make any representation or warranty of fitness for a particular use or purpose, and there is no implied condition of fitness for a particular use or purpose.

IHP makes no expressed warranties except as stated in this 5 Year Limited Warranty. The duration of any implied warranty is limited to the duration of this expressed warranty.

No one is authorized to change this 5 Year Limited Warranty or to create for IHP any other obligation or liability in connection with the Product. Some states and provinces do not allow the exclusion or limitation of incidental or consequential damages, so the above limitations or exclusions may not apply to you. The provisions of this 5 Year Limited Warranty are in addition to and not a modification of or subtraction from any statutory warranties and other rights and remedies provided by law.

**INVESTIGATION OF CLAIMS AGAINST WARRANTY**

IHP reserves the right to investigate any and all claims against this 5 Year Limited Warranty and to decide, in its sole discretion, upon the method of settlement.

To receive the benefits and advantages described in this 5 Year Limited Warranty, the appliance must be installed and repaired by a licensed contractor approved by IHP.

Contact IHP at the address provided herein to obtain a listing of approved dealers/distributors. **IHP shall in no event be responsible for any warranty work done by a contractor that is not approved without first obtaining IHP's prior written consent.**

**HOW TO REGISTER A CLAIM AGAINST WARRANTY**

In order for any claim under this warranty to be valid, you must contact the IHP dealer/distributor from which you purchased the product. If you cannot locate the dealer/distributor, then you must notify IHP in writing. IHP must be notified of the claimed defect in writing within 90 days of the date of failure. Notices should be directed to the IHP Warranty Department at 1769 East Lawrence Street; Russellville, AL 35654 or visit our website at WWW.SUPERIORFIREPLACES.US.COM.



Printed in U.S.A. © 2013 Innovative Hearth Products
**P/N 900232-00, Rev. B 02/2018**

**Innovative Hearth Products**
**1769 East Lawrence Street • Russellville, AL 35654**

## WARRANTY

Your wood appliance is covered by a limited warranty (provided with the appliance). Please read the warranty to be familiar with its coverage.

Retain this manual. File it with your other documents for future reference.

## REPLACEMENT PARTS

See ***Page 23*** for a complete replacement parts list. Use only parts supplied from the manufacturer.

Normally, all parts should be ordered through your IHP distributor or dealer. Parts will be shipped at prevailing prices at time of order.

When ordering repair parts, always give the following information:

**1.** The model number of the appliance.
**2.** The Serial Number of the appliance.
**3.** The part number.
**4.** The description of the part.
**5.** The quantity required.
**6.** The installation date of the appliance.

If you encounter any problems or have any questions concerning the installation or application of this system, please contact your dealer.

**Innovative Hearth Products**
**1769 East Lawrence Street**
**Russellville, AL 35654**
**SuperiorFireplaces.us.com**

## PRODUCT REFERENCE INFORMATION

We recommend that you record the following important information about your appliance. If you did not purchase your appliance directly from an IHP dealer, then contact us at SuperiorFireplaces.us.com to find your nearest IHP dealer who will answer your questions or address your concerns.

Model Number _____

Serial Number _____

Date Installed _____

Your Dealer's Name _____

NATIONAL FIREPLACE INSTITUTE NFI CERTIFIED www.nficertified.org

We recommend that our woodburning hearth products be installed and serviced by professionals who are certified in the U.S. by the National Fireplace Institute® (NFI) as NFI Woodburning Specialists or who are certified in Canada by Wood Energy Technical Training (WETT).

Wood Energy Technical Training www.wettinc.ca

Innovative Hearth Products (IHP) reserves the right to make changes at any time, without notice, in design, materials, specifications, and prices, and also to discontinue colors, styles, and products. Consult your local distributor for fireplace code information.

INNOVATIVE HEARTH PRODUCTS

Printed in U.S.A. © 2013 Innovative Hearth Products



P900109-01