WXS2021

Appliance Specifications - Wood-Burning Stove

Product Reference Information			
Cat. No.	*Description*	*Ship. Weight*	*Ship. Volume*
F2630	WXS2021 Wood-Burning Stove	316 lb.	46.7 cu. ft.

Notes

NOTES:

- *Dimensions shown are approximations only (+/- 1/4")*
- *Diagrams, illustrations and photographs are not to scale – consult installation instructions. Product designs, materials, dimensions, specifications, colors and prices are subject to change or discontinuance without notice.*
- *Approved for residential and manufactured home installations.*
- *Optional Kits Available: Blower and Outside Air Kit*

❶ *Square-foot heating capacities and burn times are approximations only. Actual performance may vary depending upon home design and insulation, ceiling heights, climate, condition and type of wood used, appliance location, burn rate, accessories chosen, chimney installation and how the appliance is operated.*

Specifications

Stove Pipe Diameter Single Wall or Double Wall	**6" (152 mm)**
Log Length	**20" Max. (508 mm Max.)**
Firebox	**Volume = 2.1 cu. ft.**
Cord Wood: ❶	**76,000 BTUs/hr.**
Maximum Burn Times ❶	**7-9 hours**
Heating Capacity ❶	**1,200 to 2,000 sq. ft.**

Listing

The WXS2021 woodstove is safety listed with the following agency:

- *PFS Corporation, Tested to UL 1482, ULC S627*

PFS C US

Report No. 14-193

EPA certification test emission value 3.05 g/hr per 2015 standard

Dimensions

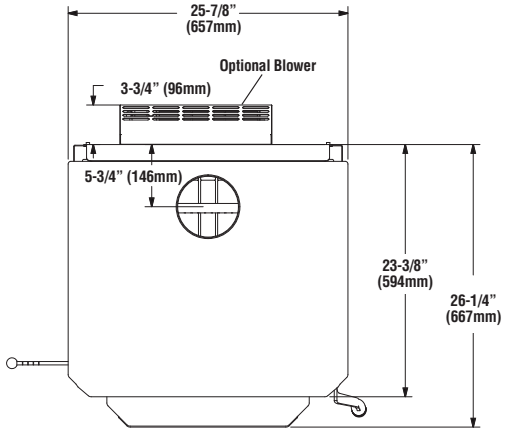

TOP VIEW

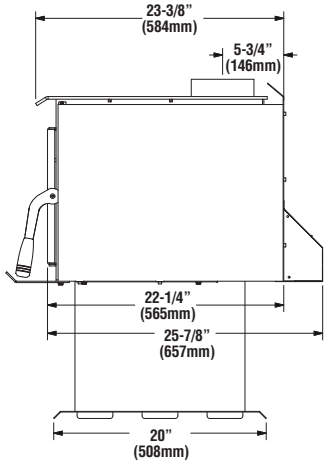

RIGHT SIDE VIEW

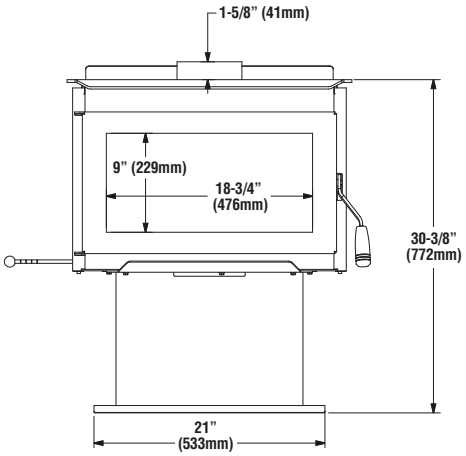

FRONT VIEW

WXS2021

Clearances

Parallel Installation

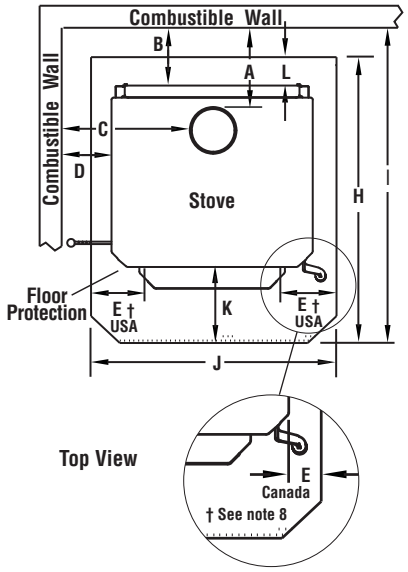

Parallel Installation

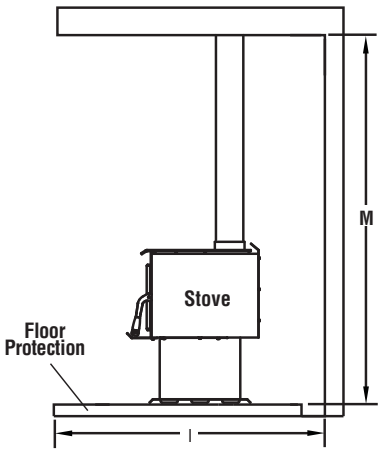

Corner Installation

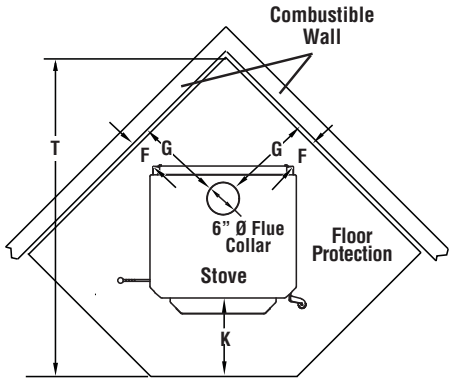

USA - inches (millimeters)

PIPE	INSTALLATION	A (3)	B (1)	C (3)	D (1)	E (8)	F (1)	G (3)	H (2)	I (6)	J (2)	K (7)	L (5)	M	T (6)
Single Wall	Residential	14-1/4 (362)	11-1/2 (292)	23 (584)	13-3/8 (340)	8 (200)	9 (229)	18 (457)	37-5/8 (956)	49 (1245)	34-7/8 (886)	16 (406)	0 (0)	84 (2134)	61-1/2 (1562)
Double Wall	Residential or Mobile Home	12 (305)	9-1/8 (232)	19-1/2 (495)	9-5/8 (245)	8 (200)	6 (152)	15 (381)	37-5/8 (956)	46-3/4 (1188)	34-7/8 (886)	16 (406)	0 (0)	84 (2134)	57-1/2 (1461)

CANADA - inches (millimeters)

PIPE	INSTALLATION	A (3)	B (1)	C (3)	D (1)	E (8)	F (1)	G (3)	H (2)	I (6)	J (2)	K (7)	L (5)	M	T (6)
Single Wall	Residential	14-1/4 (362)	11-1/2 (292)	23 (584)	13-3/8 (340)	8 (200)	9 (229)	18 (457)	47-5/8 (1210)	51 (1295)	40-7/8 (1038)	18 (450)	8 (200)	84 (2134)	63-1/2 (1613)
Double Wall	Residential or Mobile Home	12 (305)	9-1/8 (232)	19-1/2 (495)	9-5/8 (245)	8 (200)	6 (152)	15 (381)	47-5/8 (1210)	48-3/4 (1238)	40-7/8 (1038)	18 (450)	8 (200)	84 (2134)	59-1/2 (1511)

Footnotes:

1- These dimensions to the stove body are for reference only. Actual distances should be measured from the stove's flue collar.

2- Minimum noncombustible hearth pad dimensions.

3- Clearances to connector pipe shall be measured from the flue collar of the stove.

5- In corner applications, when installed at minimum back wall clearances, the required floor protection is dimensioned off the back plane of the stove, therefore the floor protection required off the back corners (at a 45 degree angle) only needs to extend to the wall. This situation will only occur in CANADA installations.

6- Reference dimension only, to assist in planning the installation.

7- Measured from front of floor protection to the front of firebox.

8- USA=8" (200mm) from door opening, Canada=8" (200mm) from sides and back of unit.

Printed in U.S.A. © 2013 Innovative Hearth Products
P/N 900168-01, REV. C, 06/2016

Superior FIREPLACES®