# VRE4032 SERIES

## VENT-FREE UNIVERSAL FIREBOXES

*Framing Dimensions*

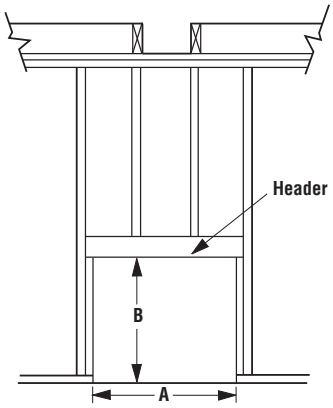


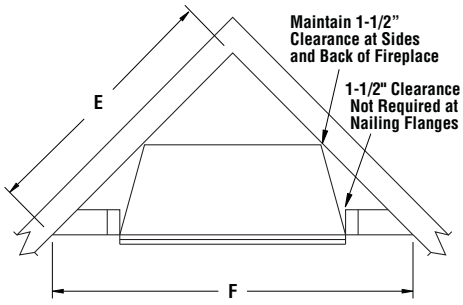


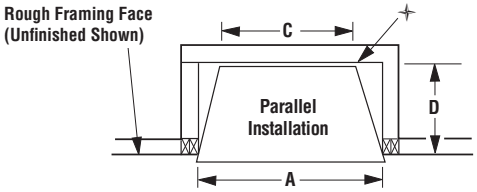


| Dim. | A | B | C | D | E | F |
|---|---|---|---|---|---|---|
| 32" | 35-7/8" | 36-3/4" | 22-1/2" | 16-1/4" | 42-1/2" | 60" |

✦ *Back wall of chase/enclosure including finishing materials if any.*

*Fireplace Dimensions*

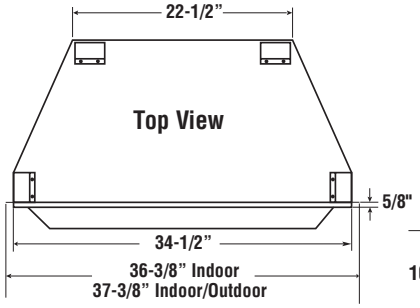


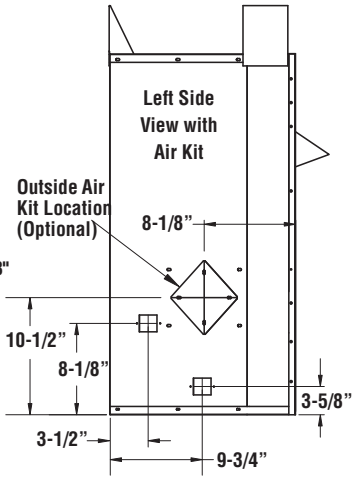


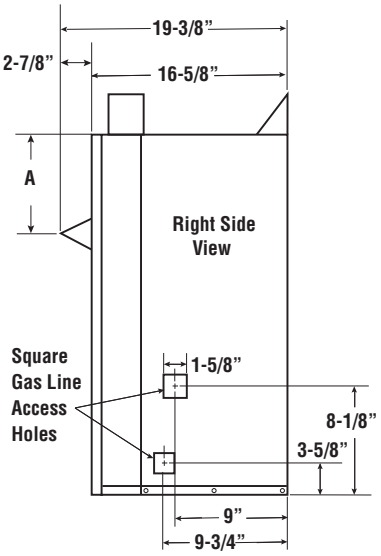


A { 8-5/8" Indoor
8-1/4" Indoor/Outdoor

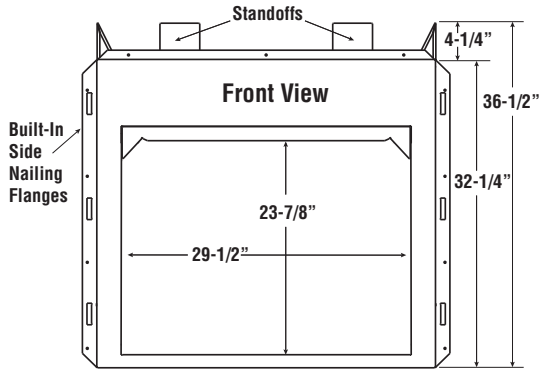


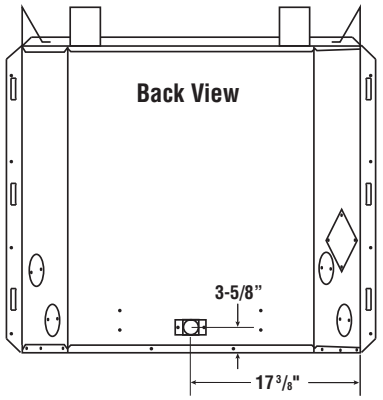


*Diagrams, illustrations and photographs are not to scale. Consult installation instructions. Product designs, materials, dimensions, specifications, colors, and prices are subject to change or discontinuance without notice.*

NOTE: DIAGRAMS & ILLUSTRATIONS ARE NOT TO SCALE.

P/N 900713-00, REV. NC, 05/2016

# VRE4032 SERIES

## Product Information

| Cat. No. | Model | Ship. Weight | Shipping Volume |
|---|---|---|---|
| F0485 | VRE4032RS | 138 lb. | 14.0 cu. ft. |
| F0491 | VRE4032WS | 138 lb. | 14.0 cu. ft. |
| F0486 | VRE4032RH | 138 lb. | 14.0 cu. ft. |
| F0492 | VRE4032WH | 138 lb. | 14.0 cu. ft. |

## Listing Information

PFS® US

Report No. F09-130

This firebox has been tested and approved under ANSI Z21.91 for use with any gas log approved to ANSI Z21.11.2 for indoor applications and ANSI Z21.97 for outdoor applications.

## Clearances

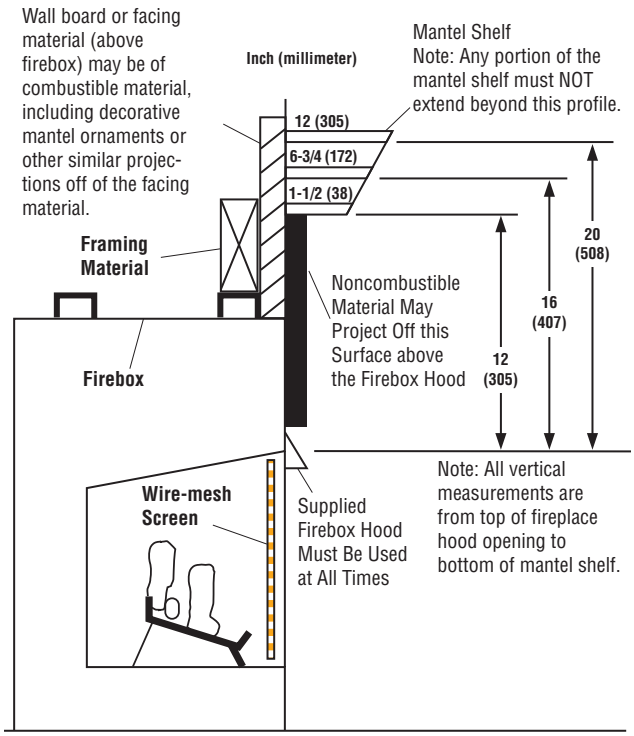


**Minimum Wall and Ceiling Clearances (see figure below)**

A. Clearances from the side of the fireplace cabinet to any combustible material and wall should follow diagram shown here.
   Example: The face of a mantel, bookshelf, etc. is made of combustible material and protrudes 3-1/2" from the wall. This combustible material must be 4" from the side of the fireplace cabinet.
B. Clearances from the top of the firebox opening to the ceiling should not be less than 42".
C. When the firebox is installed directly on carpeting, vinyl tile or other combustible material, other than wood flooring, the firebox should be installed on a metal or wood panel extending the full width and depth of the enclosure.
D. Clearances from the bottom of firebox to the floor is 0".

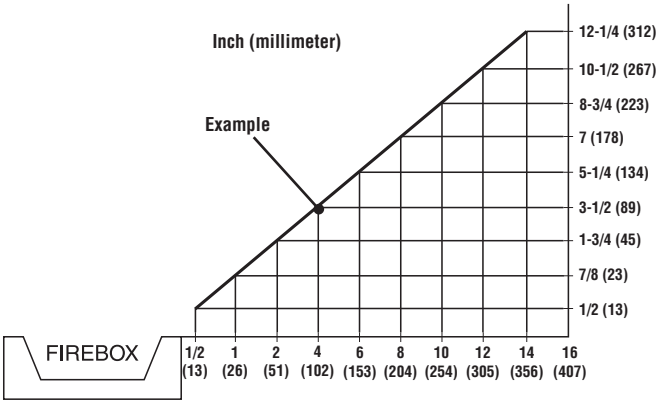


## Nailing Flanges

**Indoor / Outdoor Firebox**

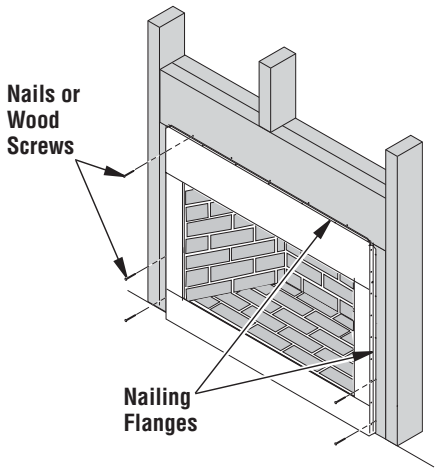


**Indoor Firebox**

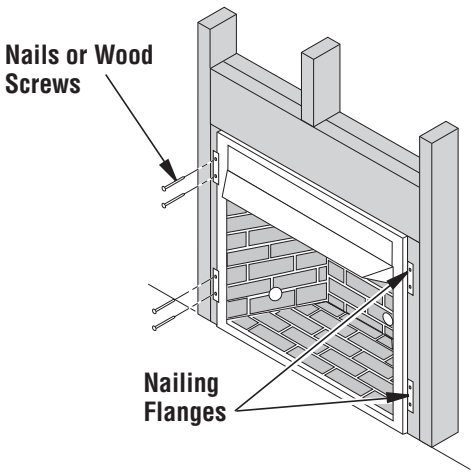


Printed in U.S.A. © 2016 Innovative Hearth Products
P/N 900713-00 REV. NC 05/2016

Superior FIREPLACES®