INNOVATIVE HEARTH PRODUCTS

P/N 900794-00 Rev. B 04/2017

HEARTH PRODUCTS KITS AND ACCESSORIES

DAMPER BLADE REPAIR KIT MODELS DBRK-B36 (F3048) AND DBRK-ST36 (F3303) INSTALLATION INSTRUCTIONS

For more information, visit IHP.US.com

CATALOG NO.	MODEL	FOR USE WITH MODELS
F3048	DBRK-B36	**Superior:** WRT2036, WCT2036 Series, WRT2042, WCT2042 Series **Comfort Flame:** Blackstone36 Series Blackstone42 Series
F3303	DBRK-ST36	**Superior:** WRT35ST **Astria:** Craftsman STP2

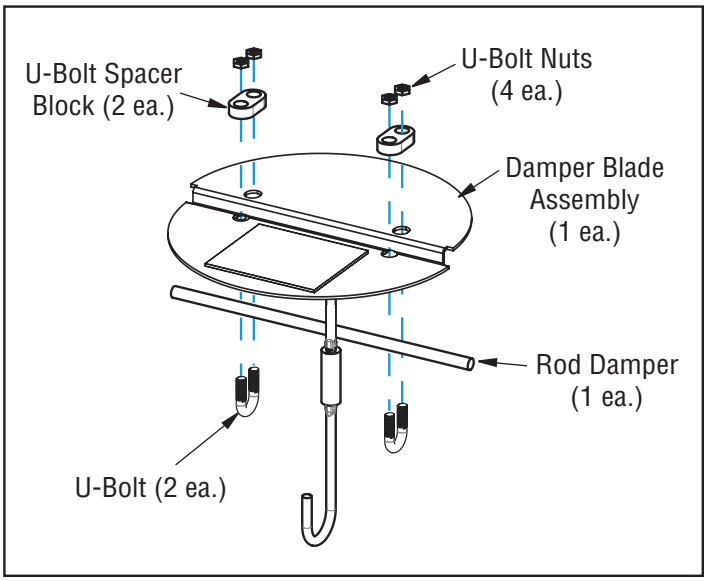

Figure 1 - Assembly, Damper Blade DBRK-B36 Model

Parts Included With Kit:

PART NO.	DESCRIPTION	F3048	F3303
800186-01	Assembly, Damper Blade	1	
800186-02	Assembly, Damper Blade		1
900794-00	Installation Instructions	1	1

This kit provides components that are designed to repair the damper installed on the fireplace.

If you encounter any problems, need clarification of these instructions or are not qualified to properly install this kit, contact you local distributor or dealer.

Read this instruction sheet in its entirety before beginning the installation.

FOLLOW ALL WARNINGS AND PRECAUTIONS IN THE INSTRUCTION SHEET.

TURN OFF THE FIREPLACE AND ALLOW IT TO COMPLETELY COOL BEFORE PROCEEDING.

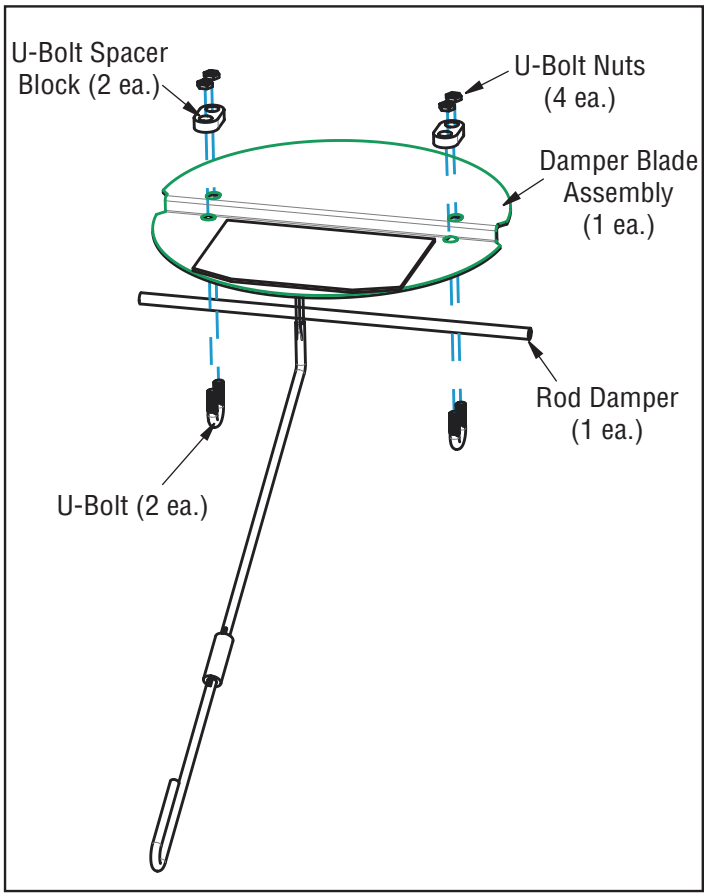

Figure 1a - Assembly, Damper Blade DBRK-ST36 Model

NOTE: DIAGRAMS & ILLUSTRATIONS ARE NOT TO SCALE

DAMPER PLATE REMOVAL

1. Remove the locking bracket and save. Remove existing damper rod/plate by cutting off both ends of the rod. A disc saw or a Dremel tool with a small diameter disc is recommended (see Figure 2).
2. Set NEW rod between the pull handle bracket and the new plate's bend. Center the rod and using a permanent marker mark the rod all around where it intersects the handle's bracket. This will aid in centering the rod on the damper can during installation (see Figure 3).

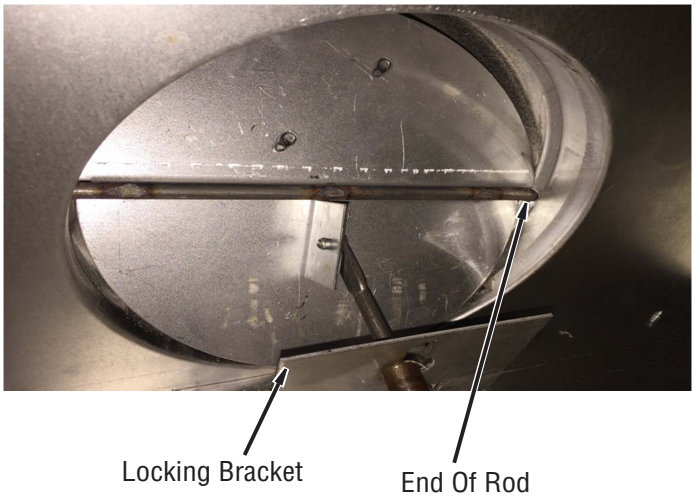

Figure 2 - Removing Damper Plate

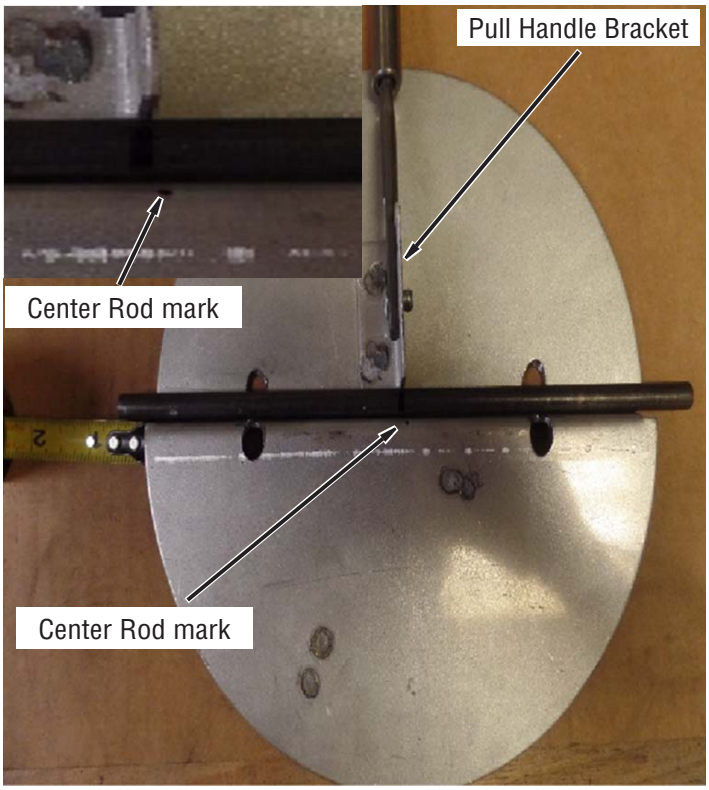

Figure 3 - Placing New Rod

INSTALLING THE NEW BLADE

NOTICE: FOR EASIER INSTALLATION ANOTHER PERSON IS RECOMMENDED.

1. Holding the damper blade with the weights (facing you at a vertical position) slide it up between the rod holes. Then close the blade assembly by pushing up on the side of blade you are holding (one with the weights), see Figures 4 and 3.
2. While holding the new damper blade up in the closed position, slide the new rod thru damper can holes. Align the rod on the damper can using the marked rod, see Figures 4 and 5.

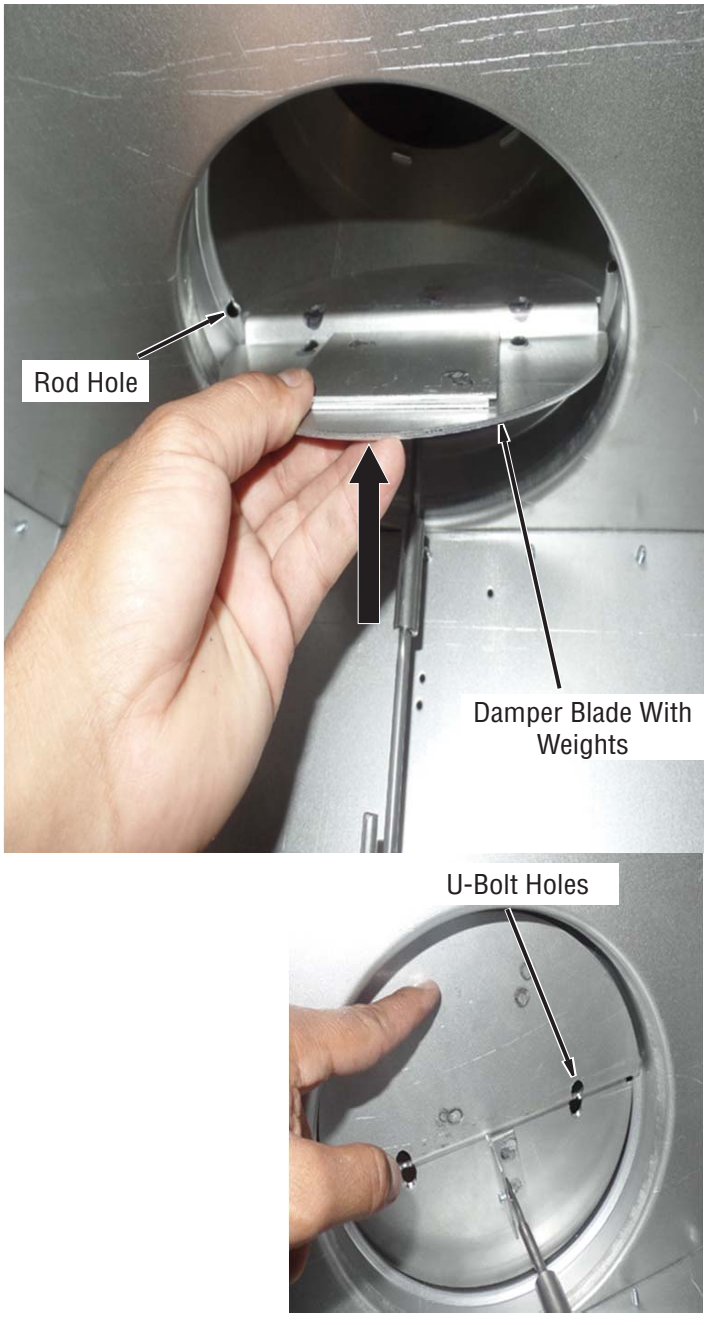

Figure 4 - Installing Damper Blade



Figure 5 - Placing Damper Rod

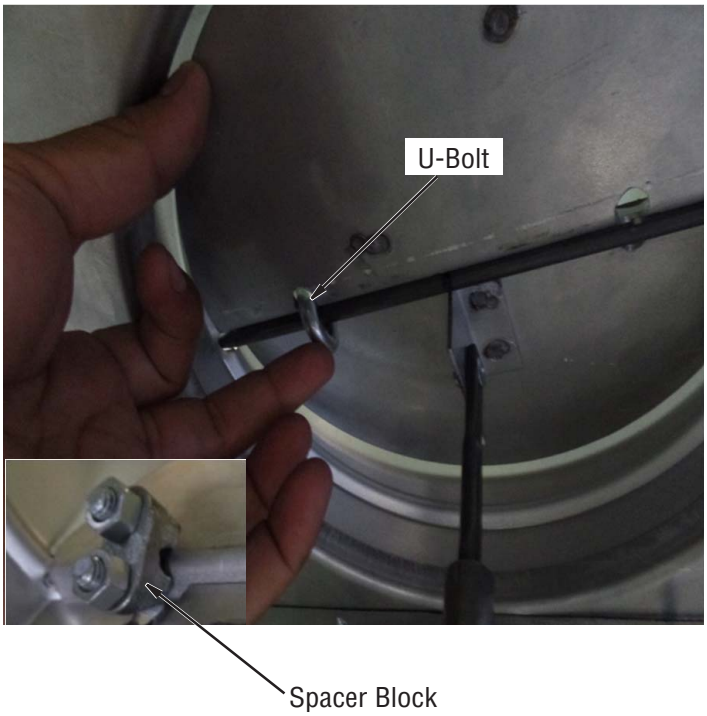

Figure 6 - Attaching U-Bolts

TIGHTENING THE BLADE

1. While holding the blade while it is centered, attach two U-bolt screws thru the pre-drilled holes on the damper plate. Holding the U-bolt firm against the rod and plate, rotate (open) the damper plate to install spacer block and hex nuts (see Figure 6).

   NOTE: DO NOT FULLY TIGHTEN THE HEX NUTS. CLOSE THE DAMPER BLADE AND ENSURE THE MARK IS STILL CENTERED ON THE DAMPER HANDLE BRACKET. IF IT IS, THEN CAREFULLY OPEN BLADE AND FULLY TIGHTEN HEX NUTS.

2. Attach the locking bracket as shown. Pull the rod and lock in key hole. If it does not lock, the bracket must be pushed up until the locking sleeve clears the key hole (see Figure 7).

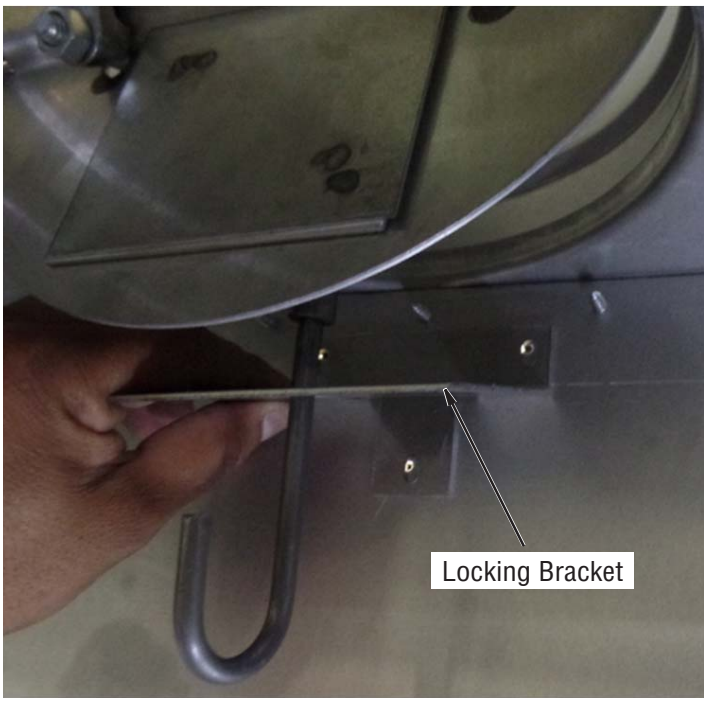

Figure 7 - Attaching Locking Bracket

NOTE: DIAGRAMS & ILLUSTRATIONS ARE NOT TO SCALE

Innovative Hearth Products reserves the right to make changes at any time, without notice, in design, materials, specifications, prices and also to discontinue colors, styles and products. Consult your local distributor for fireplace code information.

Printed in U.S.A. © 2016 Innovative Hearth Products LLC

P/N 900794-00 Rev. B 04/2017

INNOVATIVE HEARTH PRODUCTS

1508 Elm Hill Pike, Suite 108 • Nashville, TN 37210