INNOVATIVE HEARTH PRODUCTS

P/N 900867-00 Rev. NC 10/2017

HEARTH PRODUCTS
KITS AND ACCESSORIES

WHITE REFRACTORY KIT INSTALLATION INSTRUCTIONS

For more information, visit IHP.us.com

CATALOG NO.	DESCRIPTION	FOR USE WITH MODELS	KIT CONTENTS
F3526	36” WS Refractory Set	**WRT2036WS WRT2036WSI WCT2036WS WCT2036WSI**	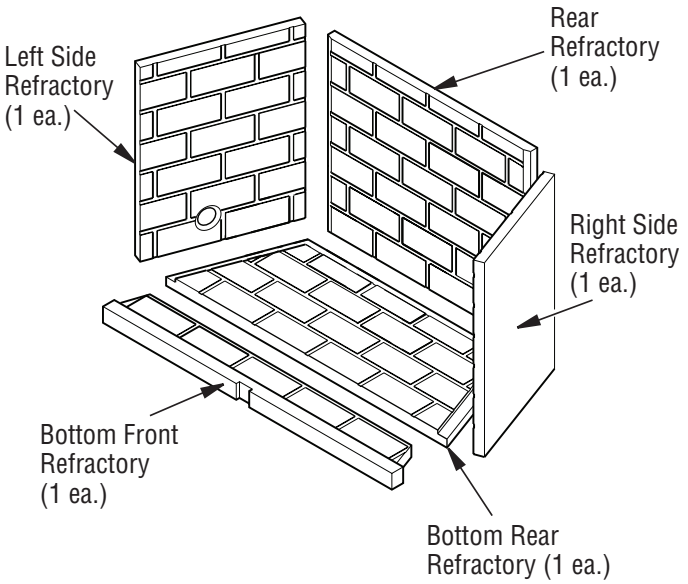
F3527	42” WS Refractory Set	**WRT2042WS WRT2042WSI WCT2042WS WCT2042WSI**	

TOOLS NEEDED

5/16" Hex Nut Screwdriver

GENERAL INFORMATION

Read this instruction sheet in its entirety before beginning the installation.

If you encounter any problems, need clarification of these instructions or are not qualified to properly install this kit, contact you local distributor or dealer.

Refractory panels may be heavy for some individuals. If this is the case, please request help from someone else.

ALL WARNINGS AND PRECAUTIONS IN THE INSTALLATION AND OPERATION MANUAL PROVIDED WITH THE FIREPLACE APPLY TO THESE INSTRUCTIONS.

TURN OFF THE FIREPLACE AND ALLOW IT TO COMPLETELY COOL BEFORE PROCEEDING.

UNPACKING NEW REFRACTORY KIT

1. Open both ends of carton, split lengthwise and spread carton out near your work area.
2. Arrange panels on top of packing and identify each piece in order of assembly.
3. Check all items for any shipping damage. If damaged, contact your authorized dealer of this product. Be sure to have your kit model number when you contact your dealer.

NOTE: DIAGRAMS & ILLUSTRATIONS ARE NOT TO SCALE

REMOVING/INSTALLING REFRACTORIES

All Models

1. Remove both glass door panels (when equipped) by following the instructions shown in Figure 1.
2. Remove 2 screws retaining the screen assemblies and slide screen rods out of mounting holes located behind facial opening (see Figure 2).
3. Remove 2 cotter Pins retaining the grate then remove the grate. Retain pins for later reinstallation.
4. Remove front brick access panel by lifting and angling out of fireplace opening (see Figure 2).
5. Remove 2 hex screws holding side brick retainers located near top of firebox on each side. Retain screws and brackets for later reinstallation (see Figure 3).
6. Remove side refractory panels by angling out one side panel first, followed by rear panel, and then remaining side panel. This will prevent rear panel from dropping and possibly causing injury (see Figure 3).
7. Remove bottom rear refractory panel and grate retaining brackets. Retain brackets for later reinstallation.
8. Remove any debris from firebox with a vacuum cleaner. Proceed to install the new kit by following these steps in reverse.

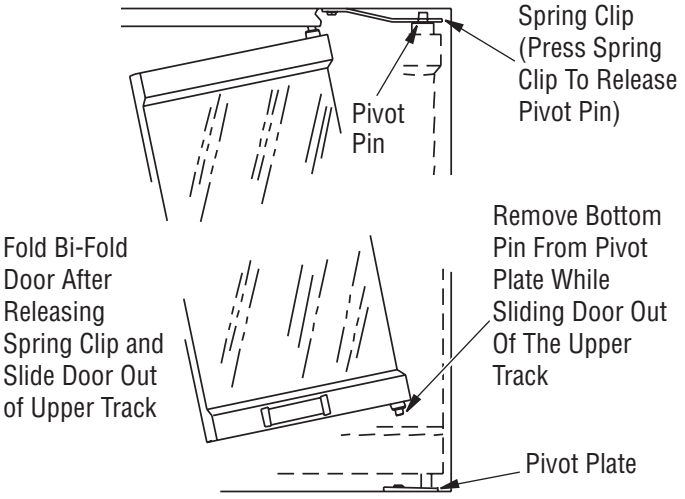

Figure 1 - Removing Glass Doors

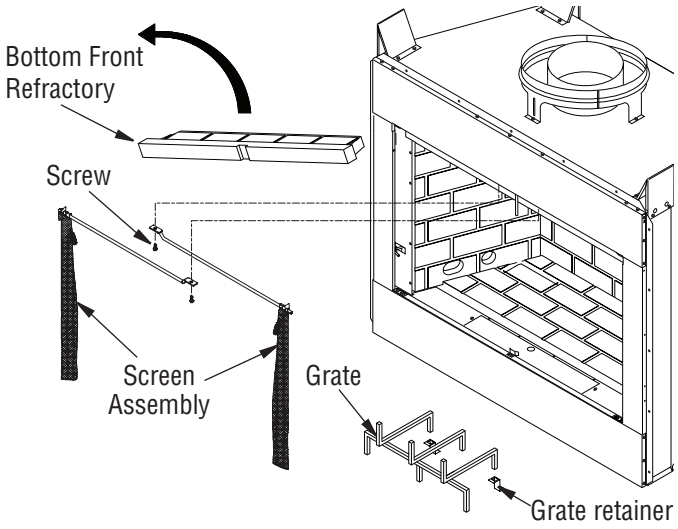

Figure 2 - Removing Screen Assembly, Bottom Front Refractory and Grate.

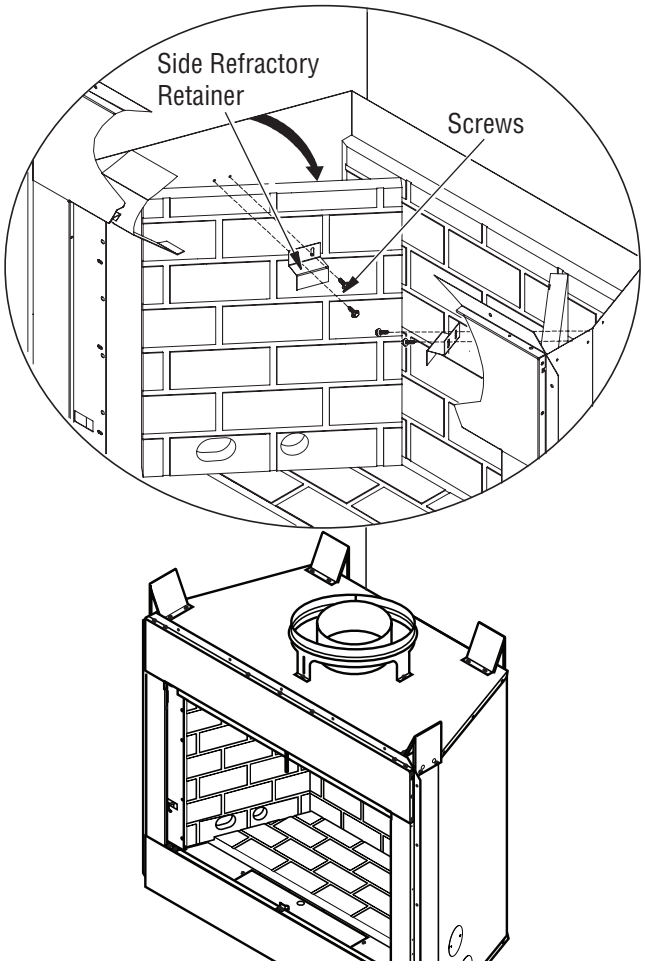

Figure 3 - Removing Side Brick Panels

NOTE: DIAGRAMS AND ILLUSTRATIONS ARE NOT TO SCALE.

IHP reserves the right to make changes at any time, without notice, in design, materials, specifications, and prices, and also to discontinue colors, styles, and products.
Consult your local distributor for fireplace code information.

Printed in U.S.A. © 2017 Innovative Hearth Products
P/N 900867-00 REV. NC 10/2017

INNOVATIVE HEARTH PRODUCTS
1508 Elm Hill Pike, suite 108 • Nashville, TN 37210