WCT4820WS

EPA Wood Burning Fireplaces Specifications

Cat.#	Model	Description
F1793	WCT4820WS	EPA Wood-Burning fireplace

PRODUCT REFERENCE INFORMATION	
Weight	385 lbs
Height	36”
Width	36”
Depth	24-1/2”
Firebox W x H x D measured in front	22” x 11-3/4” x 12”

FRAMING DIMENSIONS Fireplace Opening Width		
A	36-3/8”	924 mm
B	37”	940 mm
C	30-1/8”	765 mm
D	13-1/2”	343 mm
E	77”	1956 mm
F	38-1/2”	978 mm
G	*24-1/2”	603 mm
J	54-1/2”	1383 mm

* Total depth is 25 inches including the back spacer minus 1/2 inch for drywall to be flush with the facing.

Framing Dimensions

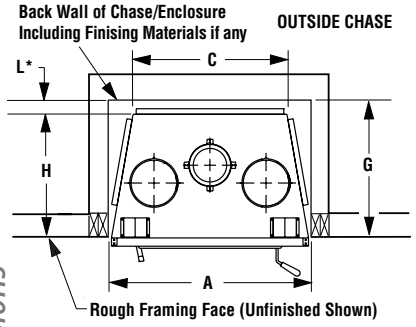

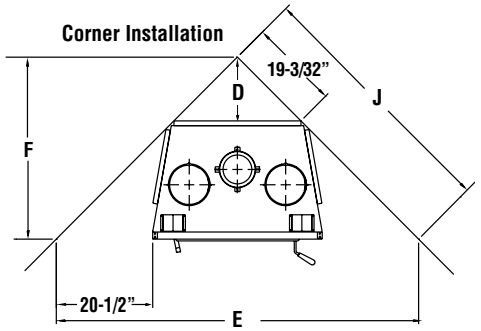

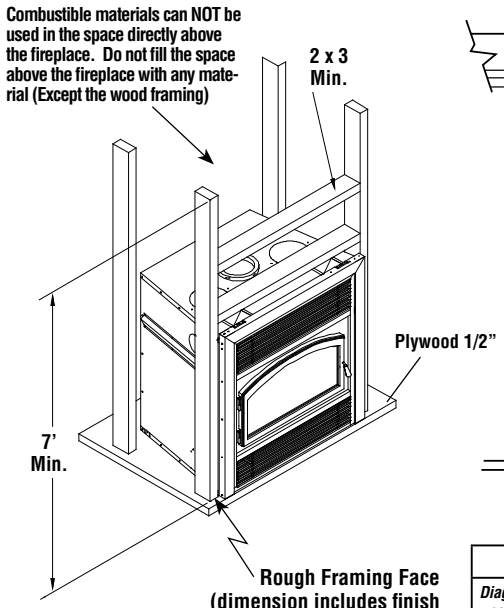

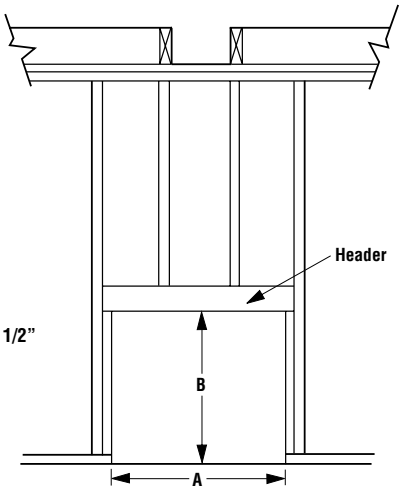

Notes
Diagrams, illustrations and photographs are not to scale – consult installation instructions. Product designs, materials, dimensions, specifications, colors and prices are subject to change or discontinuance without notice.
All framing dimensions calculated for 1/2" dry wall at the fireplace face. If sheathing the chase or finishing with other thickness materials, calculations will need to be made.
** The fireplace must not be in contact with any insulation or loose filling material. Cover the insulation with drywall panels around the fireplace.*

Listing Information

PFS C US

Report No. 14-180

Listed to ULC-S610 & UL-127

EPA certification test emission value 3.7 g/hr per 2015 standard

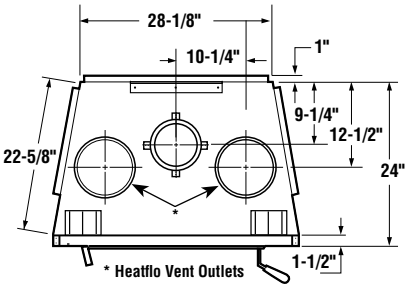

Fireplace Dimensions

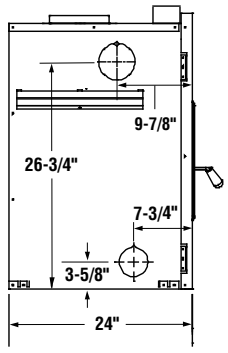

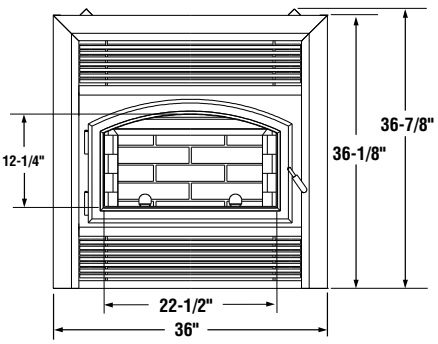

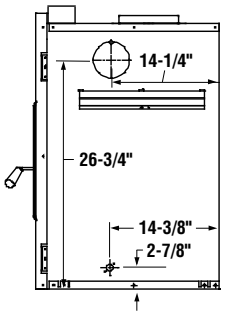

INSTALLATION ACCESSORIES

Fireplace Model

- **6” diameter chimney - United States** Model IHP Snap-Pak, including:
  - Chimney lengths
  - Elbows *(where necessary)*
  - Associated components as per these installation instructions
- **6” diameter chimney - Canada** Models ASHT® & S2100 manufactured by Security Chimneys® or DuraTech Canada (DTC) manufactured by DuraVent only, including:
  - Chimney lengths
  - Elbows *(where necessary)*
  - Associated components as per these installation instructions & instructions provided by the venting manufacturer
- **Black Arch Door** - Required (Order Separately*)*
- **UZY5 Blower Kit** (included)
- **VRUW Blower Speed Control** (included)
- **Outside Air Kit** (Included)
- **Heatflo Convection Kit** (optional)
- **Forced Air Kit** (optional)

WCT4820WS

EPA Wood Burning Fireplaces Specifications

Typical Installations

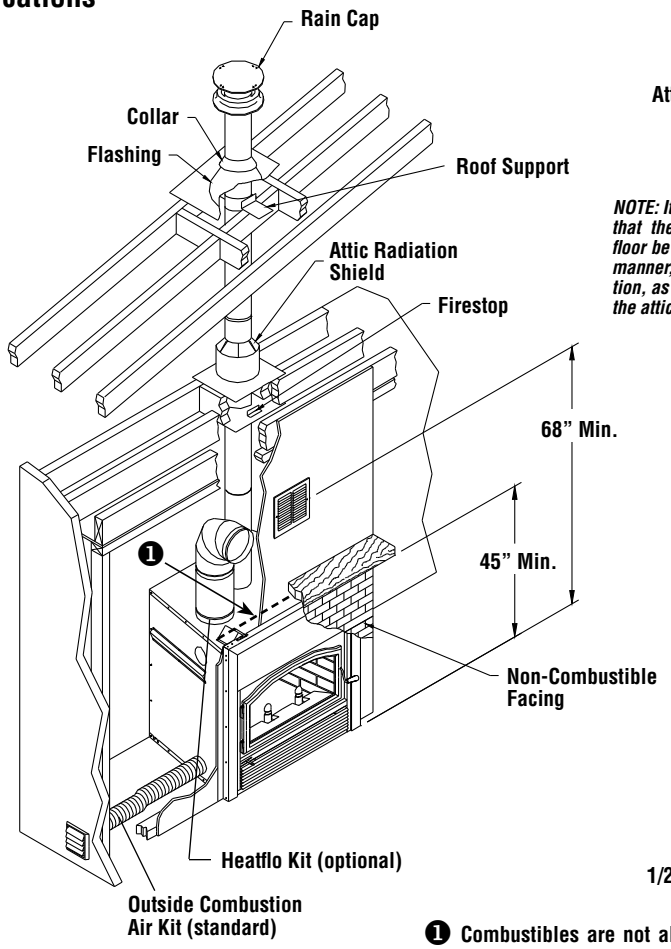

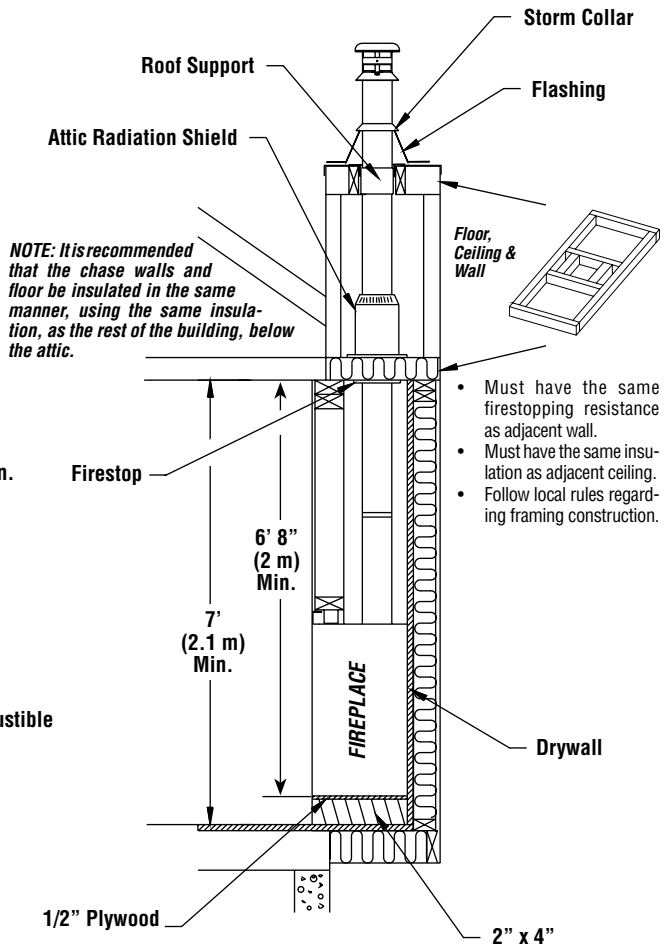

1 **Combustibles are not allowed below top spacers above the fireplace. Facing in front of fireplace must be non-combustible below this area.**

Combustible Clearances

CLEARANCE TO COMBUSTIBLES

The following clearances meet the minimum requirements for a safe installation:

Side wall: 17" (324 mm) measured from the fireplace side.

Ceiling: 6' 8" (2032 mm) measured from the base of the fireplace.

Fireplace enclosure:

Bottom: 0"
Side: 0" to standoff
Back: 0" to standoff

Top: Do not fill the space above the fireplace with any material (Except the wood framing)

Chimney: 2" (50 mm)

Mantel: 45" (1143 mm) measured from the base of the fireplace.

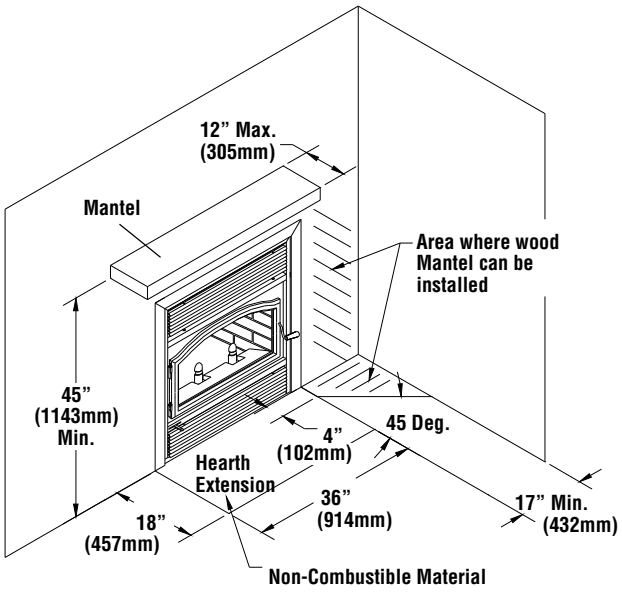

Printed in U.S.A. © 2019 Innovative Hearth Products
P/N 900998-01 REV. NC 07/2019

Superior FIREPLACES®