INSTALLATION AND OPERATION INSTRUCTIONS

WRT3920WS

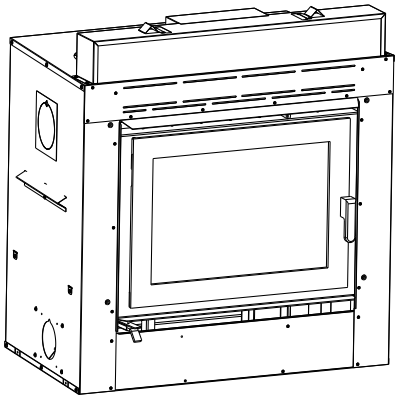

EPA Wood-Burning Fireplace
P/N 901001-00 REV. B 02/2022

MODELS

WRT3920WS

This installation manual will enable you to obtain a safe, efficient and dependable installation of your fireplace system. Please read and understand these instructions before beginning your installation.

Do not alter or modify the fireplace or its components under any circumstances. Any modification or alteration of the fireplace system, including but not limited to the fireplace, chimney components and accessories, may void the warranty, listings and approvals of this system and could result in an unsafe and potentially dangerous installation.

IHP wood-burning fireplaces are designed for use as a supplemental heater. They are not intended for continuous use as a primary heat source.

SAVE THESE INSTRUCTIONS FOR FUTURE REFERENCE

A French manual is available upon request. Order P/N 901001-02.

Ce manuel d'installation est disponible en francais, simplement en faire la demande. Numéro de la pièce 901001-02.

⚠ WARNING

- **Hot! Do not touch! The glass and surfaces of this appliance will be hot during operation and will retain heat for a while after shutting off the appliance. Severe burns may result.**
- **Carefully supervise children in the same room as appliance.**
- **If small children are present in the home, it is recommended that this appliance be fitted with an adjustable safety gate or barrier screen.**

⚠ WARNING

- **The fireplace cannot be operated without a door. Consult your dealer to select the correct replacement door.**
- **The fireplace is equipped with a blower, electrical connection must be made prior to fireplace installation**
- **Important! To assure proper alignment of glass door: Install this fireplace in a square and plumb condition, using shims as necessary at sides and/or bottom.**
- **Install the fireplace only as described in these instructions.**

⚠ WARNING

This product can expose you to chemicals including Carbon Black, which is known to the State of California to cause cancer, and Carbon Monoxide, which is known to the State of California to cause birth defects or other reproductive harm. For more information go to www.P65Warnings.ca.gov

PFS C US

Listed to standards:
ULC-S610 and UL-127
Report # 14-181
EPA Cert. No. 111-17

CONGRATULATIONS!

When you purchased your new fireplace, you joined the ranks of thousands of individuals whose answer to their home heating needs reflects their concern for aesthetics, efficiency and our environment. We extend our continued support to help you achieve the maximum benefit and enjoyment available from your new fireplace.

Thank you for selecting a IHP fireplace as the answer to your home supplemental heating needs.

TABLE OF CONTENTS

Introduction ..... Page 2
Parts Required ..... Page 2
Optional Equipment ..... Page 2
Safety Rules ..... Page 3
Locating the Name Plate ..... Page 3
Operating The Fireplace ..... Page 4
Catalytic Combustor ..... Page 4
Catalytic CAT bypass Gauge ..... Page 4
Combustion Control ..... Page 4
Starting And Maintaining A Fire ..... Page 6
Refueling For Best Performance ..... Page 6
Smoking – Causes And Troubleshooting ..... Page 6
Important Cautions ..... Page 6
Smoke Detector ..... Page 7
Carbon Monoxide Monitor ..... Page 7
Dealing With A Chimney Fire ..... Page 7
Achieving Clean Burns ..... Page 7
Fuel ..... Page 7
Maintaining Your Fireplace ..... Page 8
Catalytic Combustor ..... Page 8
Refractory Installation ..... Page 11
Disposing of Ashes ..... Page 11
Door Removal ..... Page 12
Door Adjustment ..... Page 12
Glass Care ..... Page 12
Fireplace Installation ..... Page 13
Optional Cast Facade Installation ..... Page 14
Hearth Extension Requirements ..... Page 14
Cold Climate Installations ..... Page 14
Framing Dimensions ..... Page 15
Nailing Flanges ..... Page 16
Facing ..... Page 16
Fireplace Blower ..... Page 17
Central Forced Air Kit ..... Page 18
Outside Air Kit ..... Page 19
Draft Requirements ..... Page 20
Chimney System ..... Page 20
Offset Chimney Installation ..... Page 22
Angled Wall Radiation Shield ..... Page 24
Chimney Support Installation ..... Page 25
Chimney Chase And Multiple Terminations ..... Page 25
Chimney Adaptor ..... Page 25
Masonry Application Instructions ..... Page 26
Installation Accessories ..... Page 27
Replacement Parts ..... Page 28
Specifications ..... Page 28
Clearance to Combustibles ..... Page 28
Chimney Components Lists ..... Page 29
Safety/Listing Label ..... Page 30
Warranty ..... Page 32
Product Reference Information ..... Page 34

THE FIREPLACE

INTRODUCTION

The WRT3920WS wood-burning fireplace is an energy efficient, heat circulating, closed combustion fireplace. You will receive a lifetime of comfort and enjoyment from your fireplace provided it is installed, maintained and operated properly.

- Please read these instructions and retain this manual for future reference.
- Before beginning the fireplace installation, consult the local authorities to obtain your building permit and check your local building codes. Install the fireplace only as described in these instructions and using only IHP components.
- This fireplace has been tested for CAN/ULC S610-M87 and ANSI/UL 127 under report number 3151759. It has also been tested for EPA 40 C.F.R Part 60, section 60.532(b). Certificate number 111-17.
- The fireplace is NOT intended for use with a gas log set. Do not use a fireplace insert or any other product with this fireplace unless it is specified by IHP for use with this appliance. Failure to follow these instructions will void the certification and the warranty of the fireplace and may result in an unsafe installation.
- These appliances are designed to provide supplemental heat to the immediate area only. Therefore, it is advisable to have an alternate heat source when installed in a dwelling.
- These appliances are NOT approved for Manufactured Home installations.

CAUTION: BURN UNTREATED WOOD ONLY. OTHER MATERIALS SUCH AS WOOD PRESERVATIVES, METAL FOILS, COAL, PLASTIC, GARBAGE, SULPHUR OR OIL MAY DAMAGE THE CATALYST.

CAUTION: DO NOT OPERATE WITHOUT THE CATALYTIC COMBUSTOR IN PLACE.

CAUTION: NEVER BURN WITH THE CAT-BYPASS OPENED EXCEPT FOR FIRE START-UP AND WHEN RELOADING THE STOVE.

PARTS REQUIRED

Fireplace Model WRT3920WS

- **6" diameter chimney** - United States Model IHP Snap-Pak, including:
  - Chimney lengths
  - Elbows (where necessary)
  - Associated components as per these installation instructions
- **6" diameter chimney - Canada** Models ASHT® & S2100 manufacture by Security Chimneys® or DuraTech Canada (DTC) manufactured by DuraVent only, including:
  - Chimney lengths
  - Elbows *(where necessary)*
  - Associated components as per these installation instructions and instructions provided by the venting manufacturer

  OR
- **7" diameter chimney** - Model ASHT and HT6103 manufactured by Security Chimneys® only.
  6" and 7" Chimneys Includes:
  - Chimney lengths
  - Elbows *(where necessary)*
  - Associated components as per these installation instructions
- **Decorative Door** (included in the fireplace)
- **Blower Kit** (Included w/Fireplace)
- **Outside Air Kit** (Included w/Fireplace)

OPTIONAL EQUIPMENT

Order Separately - See *Pages 27 through 30*

- **Additional Equipment (optional)**
  - AC Chimney Starter Section and AC Chimney
  - Chimney Adaptor 7 inch (6AW7) *(If you choose to use 7 inch ASHT or HT6103 chimney)*
  - Forced Air Kit
  - Cast Facade Kit
  - Blower Speed Control (VRUW)
  - Blower Thermodisc Heat Switch Control (VTU)

NOTE: DIAGRAMS & ILLUSTRATIONS ARE NOT TO SCALE.

IMPORTANT! GENERAL SAFETY PRECAUTIONS. READ AND UNDERSTAND THESE SAFETY RULES BEFORE YOUR FIRST FIRE.

⚠ WARNING

THE FIREPLACE MUST BE OPERATED WITH THE DOOR FULLY OPENED OR DOOR FULLY CLOSED. IF THE DOOR IS LEFT PARTLY OPENED, GAS AND FLAME MAY BE DRAWN OUT OF THE FIREPLACE OPENING, CREATING RISKS OF BOTH FIRE AND SMOKE.

⚠ WARNING

NEVER use gasoline, gasoline-type lantern fuel, kerosene, charcoal lighter fluid, naphtha, engine oil or similar liquids to start or "freshen up" a fire in this fireplace. Keep any flammable liquids a safe distance from the fireplace at all times.

⚠ WARNING

THIS FIREPLACE HAS NOT BEEN TESTED WITH AN UNVENTED GAS LOGS OR A FIREPLACE INSERT. TO REDUCE RISK OF FIRE OR INJURY, DO NOT INSTALL AN UNVENTED GAS LOG SET OR FIREPLACE INSERT OR OTHER PRODUCTS NOT SPECIFIED FOR USE WITH THIS FIREPLACE.

⚠ WARNING

Never leave children unattended when there is a fire burning in the fireplace.

⚠ WARNING

To avoid the risk of damaging fireplace materials and increasing the risk of fire, do not use the fireplace to cook or warm food.

⚠ WARNING

Use care when selecting window treatments for windows located near the fireplace. Avoid using combustible flowing window treatments such as curtains on nearby windows that are of sufficient length to be blown in front of an open flame when the window is opened.

Keep any combustible furniture, materials or decorative pillows at least 48" (1219 mm) from the front fireplace opening.

⚠ WARNING

Never leave your fireplace unattended while it is burning.

⚠ IMPORTANT

When burning wood, use SOLID NATURAL DRY WELL-SEASONED WOOD ONLY. Hardwoods are recommended (soft woods tend to burn very quickly).

- DO NOT burn treated wood, charcoal, coal, trash, cardboard, driftwood, woods dipped in tar, Christmas tree greens, pitch, pine tar, creosote, chemical chimney cleaners, flame colorants, polystyrene packaging, wood products with synthetic binders (i.e. plywood). Plywood, lumber and other misc. materials can produce abnormally high temperatures, sputtering and smoking fires and may contain hazardous chemicals to treat insects and fungus.
- Burning unapproved fuels can produce excessive temperatures, beyond the design capabilities of the fireplace and may produce excess sparks or may contain hazardous chemicals. Burning unapproved fuels can result in a chimney fire, a house fire, personal injury, death or loss of property.

⚠ WARNING

Be careful adding wood fuel to the fire or handling fireplace tools such as shovels, tongs or pokers.

⚠ WARNING

Never modify or alter your fireplace system in any way. To do so may create a potential fire hazard and void the limited warranty, listings and approvals of this system.

⚠ WARNING

The bottom refractory can be cracked by excessive abuse such as tossing heavy logs onto the grate or gouging with fireplace tools. Exercise caution when adding wood to your fireplace.

⚠ WARNING

Neither the manufacturer nor the seller warrants "smoke free" operation nor are we responsible for inadequate system draft caused by mechanical systems, general construction conditions, inadequate chimney heights, adverse wind conditions and/or unusual environmental factors or conditions beyond our control.

⚠ WARNING

Always ensure that the air inlet to the fireplace is free from debris and any other obstructions that can block the entrance of air.

LOCATING THE NAME PLATE

The name plate has been attached to a chain located inside the front opening below the door. To locate it, simply place your hand into the center of the opening and slide it to the right. Locate the chain and pull on it to access the name plate.

NOTE: DIAGRAMS & ILLUSTRATIONS ARE NOT TO SCALE.

OPERATING THE FIREPLACE

Fuel - USE SOLID NATURAL WOOD FUEL ONLY. This appliance is designed to burn dry seasoned natural wood only (see *Page 8* for a list of prohibited fuels). Failure to burn proper fuels only will void the certification and the warranty of the appliance. Hardwoods are preferred to softwoods since the energy content of wood is relative to its density. Hardwoods will result in a longer burning fire and less frequent refueling.

A moisture content of 15% to 20% (seasoned) is recommended. Wood that has been cut and split and let to dry under a cover for a period of one year will usually meet that criteria. The required drying time will vary depending on the climate. Wood that is packed tight together will take longer to dry. Seasoned wood is darker in color than wet wood and will have visible cracks in the grain on the ends. Excessively wet wood will be difficult to burn and will result in lower efficiency, increased creosoting and plugging of the catalytic combustor. Excessively dry wood will burn well but will also have higher emissions and shorter burning time.

DO NOT OVERFIRE THIS HEATER

Attempts to achieve heat output rates that exceed heater design specifications can result in permanent damage to the heater.

First Fires

The first five or six fires should be small fires of short duration (about 30 to 60 minutes). This will help cure the refractory bricks. During the first few fires of this appliance there may be some odor and smoke due to the curing of the paint, dust accumulation and burning off of lubricants used in the manufacturing process. It may set off a smoke alarm located in the same room. For this reason the room should be well ventilated for the first few fires.

Catalytic Combustor

This fireplace is equipped with a catalytic combustor. Unburned by-products of the wood fire are burned as they pass through the combustor resulting in less pollution, reduced creosote and higher efficiency. In order to have the catalyst working, temperatures of the flue gases entering the combustor have to be higher than 500° F (260° C). That is why the unit is equipped with a CAT bypass damper that allows the draft air to bypass the catalytic combustor. Opening the CAT bypass damper control increases the draft allowing the unit to achieve proper operating temperatures during a cold start-up. It also provides more draft to prevent smoke spillage when the door is opened.

Catalytic CAT Bypass Gauge

To determine when to close the CAT bypass, the unit is equipped with a gauge *(see **Figure 1**)*. Once you can see the gauge needle in the catalytic combustor operating range, you may push to close the CAT bypass lever, about 15-30 minutes after initial light-off.

When the catalyst light-off conditions are achieved, the combustor will keep on going until it runs out of smoke. Note that the catalyst does not need to be glowing to be working, it can work very well at temperatures well below the 538° C (1000° F) level at which it will begin to glow. The best way to see if the catalyst is active is to take a look at what is coming out of the chimney. If the catalytic combustor is working you will see some white water vapor coming out, compared to a more brown/gray smoke when the CAT bypass is opened. Do not burn any chemical chimney cleaner; it can make the catalyst inactive.

COMBUSTION CONTROLS

Primary Air Control

There is no flue damper in the fireplace. As is common with air tight stoves, the combustion air control sets the flow of air entering the firebox. This allows for a more precise control of the fire. The combustion air control is located below the door on the left side. The main source of air (primary air) entering the firebox can be diminished by moving the air combustion control from left to right. The primary air is fully opened when the air control is completely moved to the left.

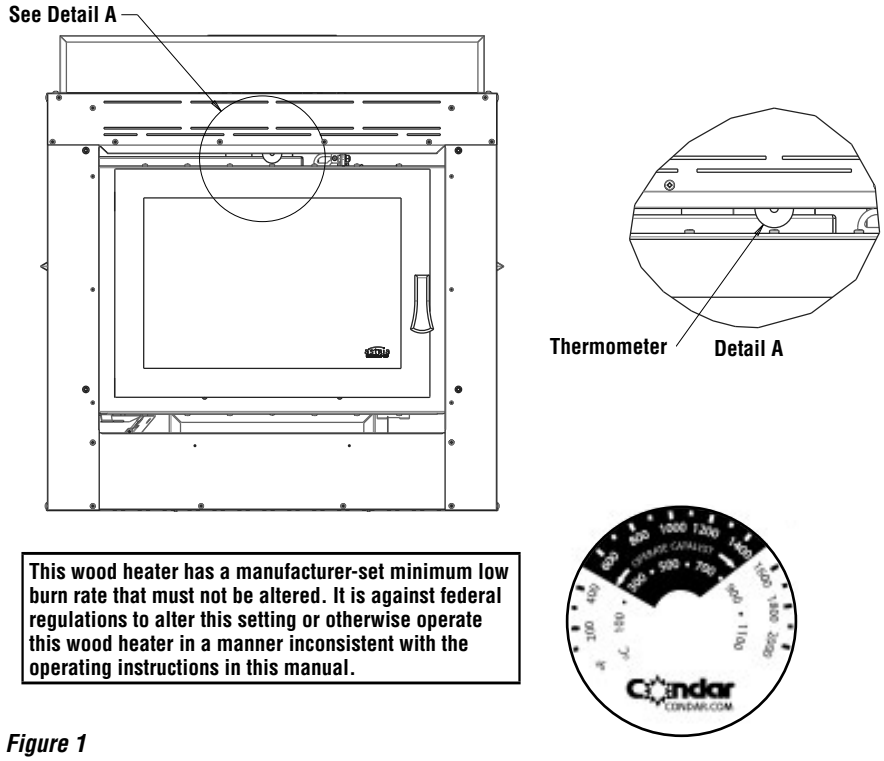

This wood heater has a manufacturer-set minimum low burn rate that must not be altered. It is against federal regulations to alter this setting or otherwise operate this wood heater in a manner inconsistent with the operating instructions in this manual.

Figure 1

This manual describes the installation and operation of the IHP model WRT3920WS catalytic equipped wood heater. This heater meets the 2020 U.S. Environmental Protection Agency's certified to comply with 2020 particulate emission standards using crib wood. Under specific test conditions this heater has been shown to deliver heat at rates ranging from 10,900 to 35,600 Btu/hr.

NOTE: DIAGRAMS & ILLUSTRATIONS ARE NOT TO SCALE.

The combustion air control should be in the closed position when the fireplace is not in use. This will minimize air leakage up the chimney. **The combustion air control and the CAT bypass damper control must be opened before opening the door to minimize the possibility of back draft coming into the room.**

Accelerated Combustion

The maximum heat output for the fireplace is achieved by burning with the door closed and the combustion air opened. By this method, the fireplace can produce the maximum BTU of heat per hour. However, it will be necessary to reload with wood every one or two hours. This is the least efficient method of burning the fireplace.

Use caution when firing with the combustion air control wide open. Only burn cord wood in this manner. Small dry pieces of softwood and construction scraps will burn very intensely using this method and may damage the firebox.

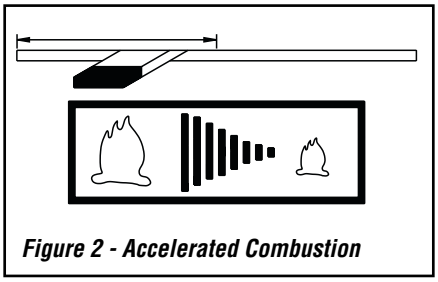

Figure 2 - Accelerated Combustion

Medium Combustion

This is the recommended mode of operating the fireplace and should be the one normally used since it will deposit the least amount of creosote on the glass and in the chimney. The combustion air control must be 3/4 closed. The precise setting will depend on many factors, including chimney length and the moisture content of the wood.

For instance, a long chimney will necessitate closing the damper more. To obtain the proper combustion, close the damper completely, then open it about 1/4" to 1/2" (6.4mm to 13mm). Two medium size pieces of wood should be burning on a bed of hot coals. The heat output will be approximately 25,000 BTU per hour and the loading time will be about every 3-4 hours. Softwoods may be burned using this method but the burn time will be substantially reduced.

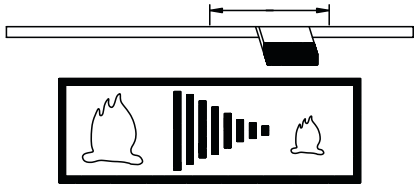

Figure 3 - Medium Combustion

Slow Combustion

When the air combustion control is completely closed, the fireplace is in a slow combustion phase. If the hearth is hot enough, slow combustion will not extinguish the fire, but there will be a noticeable change in the flame pattern. The flames will be slow and may appear dirty if the wood is too wet (moisture content of 20% and more). Do not allow the wood to burn without flame, since this will produce excessive creosote in the unit.

Creosote may accumulate on the glass door. This method of burning should be used only after operating the fireplace with the air control opened to produce a hot fire for about an hour or at medium pace for at least three (3) hours. Slow combustion can be used at night in order to reduce the heat output and to prolong the burn. The loading time will be between 6-8 hours.

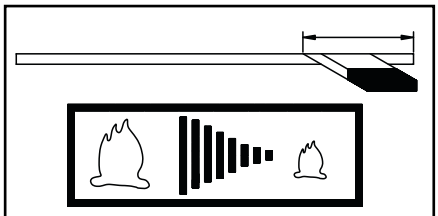

Figure 4 - Slow Combustion

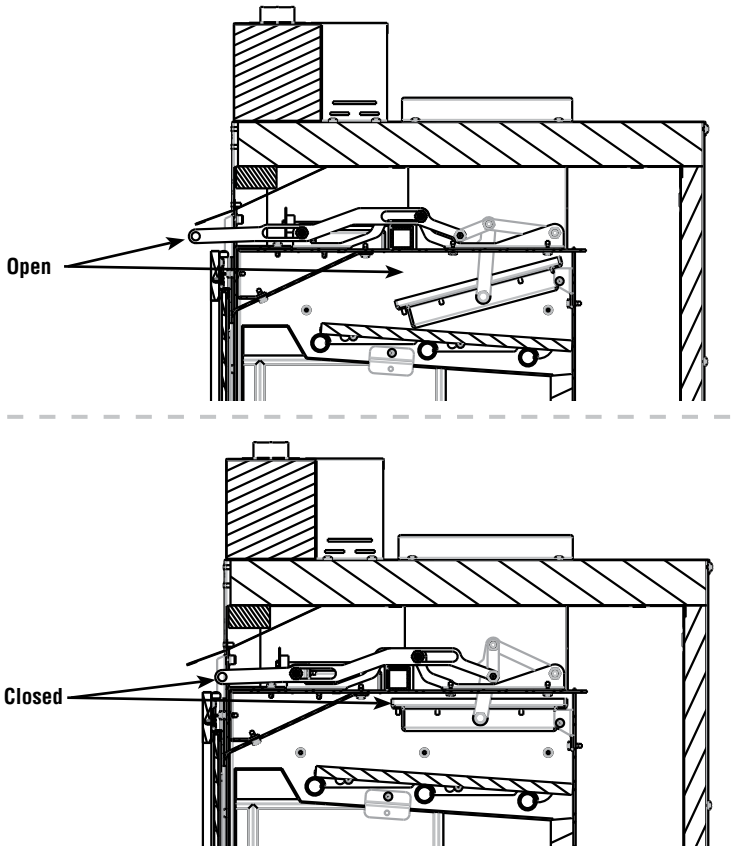

Figure 5 - CAT Bypass

NOTE: DIAGRAMS & ILLUSTRATIONS ARE NOT TO SCALE.

STARTING AND MAINTAINING A FIRE

Step 1. Place several crumpled up balls of newspaper in the firebox. Place small dry pieces of kindling on top of the paper, criss-crossing the kindling so that there are air spaces in between. The kindling should be placed at the center of the firebox so as to allow for sufficient air circulation.

Step 2. Adjust the primary air control into the OPEN position. Light the newspaper. Leave the door partially opened to facilitate the start-up.

Step 3. Once kindling fire is well established, cord wood can be added. You may set the primary air control to the desired level (see *Primary Air Combustion Control* section for proper operation of the air controls). Close the door and maintain an accelerated combustion air set up in order to achieve combustor light-off conditions.

Step 4. When the fire is burning well, and you can see the gauge needle in the catalytic combustor operating range, close the CAT bypass damper control by pushing the control rod in. It takes about 15–30 minutes with the CAT bypass opened to reach proper light-off temperatures for the catalytic combustor.

Step 5. Set the primary control to the desired burn level. The fireplace will automatically go to that level after the fire is fully established.

The unit will burn best with 2-3 pieces of cord wood spaced 1 to 2 inches apart and allowing air to get under the fuel. Criss-crossing or arranging the fuel so that air can get underneath will help the fire to get started easily. The unit should be operated with the air control fully open long enough to get the cord wood well ignited.

REFUELING FOR BEST PERFORMANCE

To refuel the fireplace at the end of a burn cycle when only hot embers remain and flames are gone (not enough heat to maintain catalyst operating temperatures):

Step 1. Open the CAT Bypass fully *(see **Figure 5**)*.
Step 2. Completely open the air control level. See ***Figure 2***.

REFUELING: During the refueling and rekindling of a cool fire, or a fire that has burned down to the charcoal phase, operate the stove at a medium to high firing rate for about 10 minutes to ensure that the catalyst reaches approximately 500°F.

Step 3. Open the door about 1" and wait 5 seconds until the air flow has stabilized. Then open the door completely, put the logs in and close the door.
Step 4. Set the air control to the desired burn level. Open the CAT bypass damper for 10 minutes before closing it. It will ensure sufficient temperatures for combustor light-off.

To refuel the fireplace when the unit is still hot (some burning fuel remaining or a glowing combustor)

A. Open the air control and the CAT bypass completely.
B. Open the door about 1" and wait 5 seconds until the air flow has stabilized. Load the fuel, close the door and CAT bypass (temperatures within the firebox should be enough to maintain catalytic operation).
C. Set the air control to the desired burn level.

NOTES:

- *For spectacular fire and optimization of the fireplace efficiency, we recommend that the wood load be placed as far back as possible.*
- *It may be necessary to turn off any blower(s) in operation during the refueling process in order to minimise smoking in the room. It is recommended to wait 15 to 30 minutes before turning the blower back on to ensure successful rekindling.*

SMOKING – CAUSES AND TROUBLESHOOTING

To reduce the likelihood of smoke coming into the room when opening the door, set the combustion air controls to the left ("Accelerated Combustion") and open the CAT bypass before opening the door. Your fireplace has been designed and tested to provide smoke free operation.

As the fire burns, air goes up the chimney. This air must be replaced through the outside air duct. When operating the fireplace, open a nearby window temporarily to check if there is adequate replacement air supply. Occasionally, there may be a small amount of smoking upon lighting the fire, until the chimney heats up but this should not last. If the fireplace continues to smoke it is probably for one of the following reasons:

A. The door is partially opened - When you open the door, open them completely.

B. Negative pressure in the house
As the fire burns, air goes up the chimney. This air must be replaced through leakage into the house or through the outside air duct (included with fireplace). When operating the fireplace, open a nearby window temporarily to check if there is adequate replacement air supply.

C. Fans operating (e.g.: range hood)
These fans draw air out of the house and may actually cause a negative pressure in the house. Turn off all fans and open a nearby window to determine if this is the cause of the problem.

D. Wet wood
Wet or tarred wood will smoulder and smoke instead of burning properly. Your dealer can help you determine if you have properly seasoned wood for burning.

E. Dirty or blocked chimney
Check to make sure the chimney is clear and clean. If dirty call a certified chimney sweep or use a properly sized chimney brush to clean.

F. Chimney Length
The minimum chimney height is twelve (12) feet (3.7 m) not including the fireplace height. The maximum chimney height is 30 ft (9 m). The chimney must extend at least three (3) feet (915 mm) above its point of contact with the roof and at least two (2) feet (610 mm) higher than any roof or wall within ten (10) feet (3 m) of it. When installed with one set of offsets, the minimum chimney height is fifteen (15) feet (4.6 m), and the maximum height is 33ft (10m). If four off-sets are used the maximum height is 35ft (10.7m). Additional height will increase draft and will decrease the tendency to smoke.

G. Poor chimney draft
With no fire, there should be sufficient draft to exhaust cigarette smoke introduced under the baffle. Chimneys installed against an outside wall without protection or a basement installation may generate back draft problems which will cause start-up problems. To prevent this, open a nearby window, roll up a piece of paper and light it. Then, hold it in the upper part of the firebox to warm up the chimney. Wait until the draft is sufficient, then start the fire.

H. Blower for forced air kit operating - Make sure that the blower is at the "off" position when you open the fireplace door for reloading.

IMPORTANT CAUTIONS

A. Do not block any hot air vents from the fireplace as this will cause the fireplace to overheat.
B. Never use gasoline, gasoline-type lantern fuel, kerosene, charcoal lighter fluid, or similar liquids to start or 'freshen up' a fire in this fireplace. Keep all such liquids well away from the fireplace while it is in use.
C. Do not burn coal. The sulphur in coal will corrode the firebox.
D. Do not burn driftwood which has been in the ocean or salt water. The salt will corrode the firebox and chimney.
E. Do not operate the unit with the door partly open since this may cause smoke to be drawn into the room.
F. Do not burn wood in the area in front of the andirons.
G. Do not abuse the unit by burning paper, or cardboard or construction material such as pressed wood, plywood or lumber. Wood protectors, metallic paper, coal, plastic, waste, sulphur and/or oil will damage the fireplace.
H. Do not allow the wood to smoulder or burn without flame, since this will produce excessive creosote in the unit as well as increased particulate emissions.

NOTE: DIAGRAMS & ILLUSTRATIONS ARE NOT TO SCALE.

SMOKE DETECTORS RECOMMENDED

Since there are always several potential sources of fire in any home, we recommend installing smoke detectors. If possible, install the smoke detector in a hallway adjacent to the room (to reduce the possibility of occasional false activation from the heat produced by these appliances). If your local code requires a smoke detector be installed within the same room, you must follow the requirements of your local code. Check with your local building department for requirements in your area.

CARBON MONOXIDE MONITOR RECOMMENDED

Carbon Monoxide Poisoning: Early signs of carbon monoxide poisoning are similar to the flu with headaches, dizziness and/or nausea. If you have these symptoms, obtain fresh air immediately. Some people are more affected by carbon monoxide than others, including pregnant women, people with heart or lung disease or anemia, those under the influence of alcohol, and those at high altitudes.

It is against federal regulations to operate wood heaters in a manner inconsistent with the operating instructions in the manual.

Dealing With a Chimney Fire

Regular chimney maintenance and inspection can prevent chimney fires. If you have a chimney fire, follow these steps:

1. Close the fireplace door and the combustion air controls.
2. Alert your family of the possible danger.
3. If you require assistance, alert your fire department.
4. If possible, use a dry chemical fire extinguisher, baking soda or sand to control the fire. Do not use water as it may cause a dangerous steam explosion.
5. Check outside to ensure that sparks and hot embers coming out of the chimney are not igniting the roof.
6. Do not use the fireplace again until your chimney and fireplace have been inspected by a qualified chimney sweep or a Fire Department Inspector.

ACHIEVING CLEAN BURNS

Check the exhaust after engaging the catalyst *(see **Figure 6**)*. Large amounts of smoke indicate an improper burn setting (either too high, or too low of a temperature to operate the catalyst). Adjust and recheck in 5 to 10 minutes.

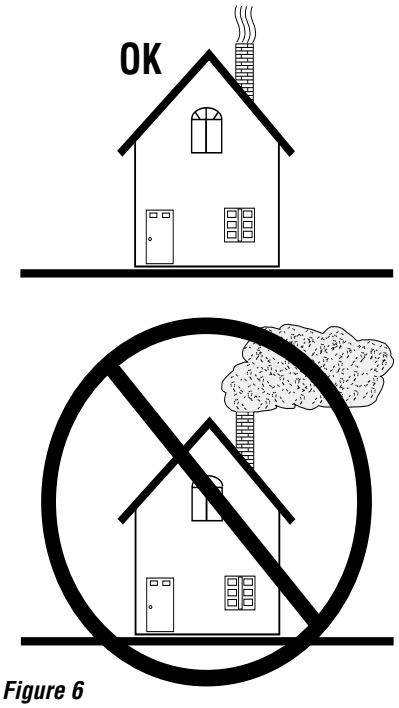

Figure 6

FUEL

WHAT DOES "WELL-SEASONED" MEAN?

When a tree is cut down, the wood is green, full of sap and moisture. This moisture content can exceed 80%, which must be reduced to less than 20%. Wood properly seasoned is then capable of generating the heat the stove was designed to provide.

Green wood does not burn easily. Attempting to burn green wood often results in a lot of smoke and very little fire. Time is the most important factor in seasoning wood. Ideally the moisture content should be reduced to 11-20%. ***NOTE: The use of a firewood moisture meter is recommended to ensure the firewood contains less than 20% moisture.***

Seasoning Guide
Softwoods - 6 months to 18 months
Hardwoods - 12 months to 24 months

Logs that are 5" diameter across or larger should be split in half, three pieces if over 8 inches, and four pieces when over a foot across. If a tree has been dead for 2 - 4 years it still needs to be cut, split, and seasoned for 6 to 24 months depending on the wood.

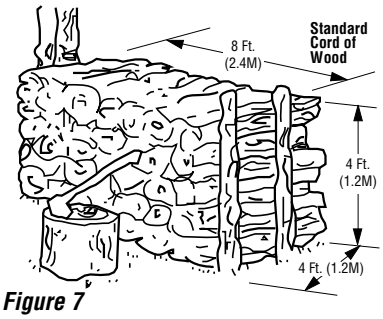

Figure 7

Prohibited Fuels

This heater is designed to burn natural wood only. Higher efficiencies and lower emissions generally result when burning air dried seasoned hardwoods, as compared to softwoods or to green or freshly cut hardwoods. DO NOT BURN:

- Garbage;
- Lawn clippings or yard waste;
- Materials containing rubber, including tires;
- Materials containing plastic;
- Waste petroleum products, paints or paint thinners, or asphalt products;
- Materials containing asbestos;
- Construction or demolition debris;
- Railroad ties or pressure-treated wood;
- Manure or animal remains;
- Salt water driftwood or other previously salt water saturated materials;
- Unseasoned wood;
- Christmas tree branches;
- Paper products, colored paper, cardboard, plywood, or particleboard;
- gasoline;
- naphtha;
- engine oil;
- flammable liquids;
- solvents;
- grease; or
- coal

The prohibition against burning these materials does not prohibit the use of fire starters made from paper, cardboard, saw dust, wax and similar substances for the purpose of starting a fire in an affected wood heater.

Burning these materials may result in release of toxic fumes or render the heater ineffective and cause smoke. Intense firing with these materials may overheat the fireplace, causing damage to the unit, a fire or even possibly igniting a chimney fire if the chimney is creosoted. Burning unapproved fuel, resulting in excessive pollutants being emitted, may be prohibited and subject to a fine or other penalty by the authority having jurisdiction in your area.

NOTE: DIAGRAMS & ILLUSTRATIONS ARE NOT TO SCALE.

MAINTAINING YOUR FIREPLACE

Have your product inspected at least once a year by a qualified service technician to ensure gaskets, air tubes, baffles, and venting are in good repair to ensure proper performance. Have degraded items replaced by a qualified service technician.

This wood heater needs periodic inspection and repair for proper operation. Consult the owner's manual for further information. It is against federal regulations to operate this wood heater in a manner inconsistent with the operating in this manual.

Creosote - Formation and Need for Removal
When wood is burned slowly, it produces tar and other organic vapors, which combine with expelled moisture to form creosote. The creosote vapors condense in the relatively cool chimney flue of a slow-burning fire. As a result, creosote residue accumulates on the flue lining. When ignited this creosote makes an extremely hot fire.

The chimney shall be inspected at least twice a year during the heating season to determine when a creosote buildup has occurred.

When creosote has accumulated it shall be removed to reduce the risk of a chimney fire.

When the creosote accumulation is large, a creosote fire in the chimney can damage the chimney and overheat the surrounding wood framing. Creosote formation in a chimney can be minimized by making sure there is always visible flame burning, avoid smouldering fires and by proper refuelling techniques.

Chimney Maintenance

Regular chimney inspection and maintenance combined with proper operation will prevent chimney fires. Keep your chimney clean. Do not allow more than 1/16" (1.6 mm) creosote build up in your chimney.
The amount of creosote will depend on variables such as frequency of use and type of fire. We recommend that you:

A. Initially inspect the chimney system weekly. From this, you will learn how often it will be necessary to clean your chimney.
B. Have your chimney cleaned by a qualified chimney sweep. If you wish to clean it yourself, we recommend using a stiff plastic or non-metallic brush. If a metal brush is used, its size should be slightly smaller than the flue to avoid damaging the chimney. Do not use a brush that will scratch the stainless steel interior of the chimney.
C. Do not expect chemical cleaners to keep your chimney clean. The rain cap can be removed for inspection and/or cleaning of the chimney.

Before performing chimney sweep, open the CAT bypass and remove the combustor. Remove dust accumulation after chimney sweep and put the combustor back in place.

CATALYTIC COMBUSTOR

This fireplace is designed with a catalytic combustor which will reduce pollution emissions and creosote build up while improving thermal efficiency. In order to optimize and maintain the combustor performance, it is important to visually check the combustor at least 3 times during the heating season to determine if physical degradation has occurred.

Catalytic combustors require little maintenance. Cleaning the combustor once a year, preferably when your flue system is serviced, is sufficient for most users.

⚠ WARNING

To prevent damage to your combustor, do not:
- **Drop the combustor (which is fragile compared to the rest of the unit – so handle with care)**
- **Run water or compressed air through the combustor**
- **Try to clean the combustor with any sharp tool**

The combustor supplied with this heater is an Innovative Hearth Products Combustor. Consult the catalytic combustor warranty also supplied with this wood heater. Warranty claims should be addressed to:
Innovative Hearth Products
1769 East Lawrence Street,
Russelville, AL 35654
Phone: 800-655-2008

The packaging of the combustor must be robust enough to protect against any shipping damage that may occur.

Catalyst Monitoring

It is important to periodically monitor the operation of the catalytic combustor to ensure that it is functioning properly and to determine when it needs to be replaced. A non-functioning combustor will result in a loss of heating efficiency, and an increase in creosote and emissions. Following is a list of items that should be checked on a periodic basis:

- Combustors should be visually inspected at least three times during the heating season to determine if physical degradation has occurred. Actual removal of the combustor is not recommended unless more detailed inspection is warranted because of decreased performance.
  If any of these conditions exists, refer to Catalyst Troubleshooting section of this owner's manual.

- This catalytic heater is equipped with a temperature probe to monitor catalyst operation. Properly functioning combustors typically maintain temperatures in excess of 500°F, and often reach temperatures in excess of 1,000°F. If catalyst temperatures are not in excess of 500°F, refer to Catalyst Troubleshooting section of this owner's manual.

- You can get an indication of whether the catalyst is working by comparing the amount of smoke leaving the chimney when the smoke is going through the combustor and catalyst light-off has been achieved, to the amount of smoke leaving the chimney when the smoke is not routed through the combustor (CAT bypass mode).

Cleaning Procedure *(see Figure 8A)*:

Tools required: (2) 9/16" wrenches, #2 square drive bit/driver

With catalyst bypass in closed position, remove (2) baffle boards from firebox.

1. Using (2) 9/16" wrenches, loosen and remove the bolt and nut that connects the linkage arm to the catalyst bypass box
2. Loosen (3) square drive screws mounting bypass assembly hinge bracket to back of firebox.
3. In an upward and forward pulling motion, remove assembly from mount and drop between the front and middle burn tube.
4. Installation is reverse of disassembly.

***NOTE**: Ensure bypass assembly is sealed to ceiling of firebox upon reinstallation. Adjustment can be made by loosening (3) mounting screws and sliding the hinge bracket up or down to create better seal and then retightening.*

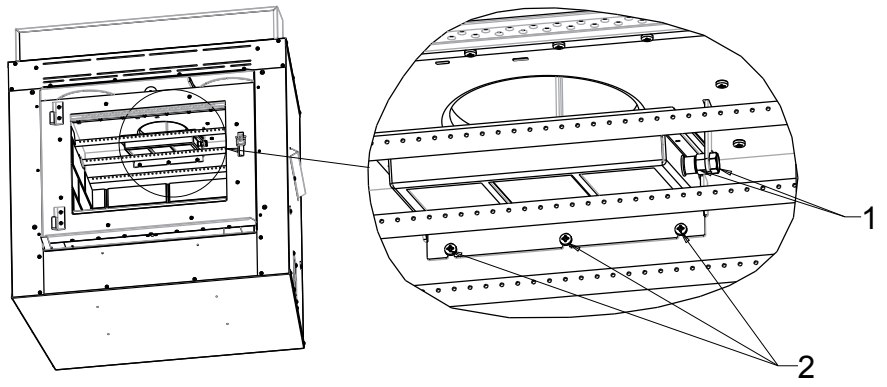

Figure 8A - Cleaning Procedure

Catalyst Bypass linkage replacement *(see Figure 8B)*:

Tools required: (2) 9/16" wrenches, #2 square drive bit/driver
With catalyst bypass in closed position, remove (2) baffle boards from firebox. Place catalyst bypass in open position.

1. Using (2) 9/16" wrenches, loosen and remove the bolt and nut that connects the linkage arm to the catalyst bypass box
2. On ceiling of firebox, adjacent to linkage arm, locate and remove (2) square drive screws.
3. Outside of unit, just left of bypass engagement lever, remove (1) square drive screw.

Linkage assembly is now free to remove from above the firebox. Lift linkage assembly up, while turning clockwise until linkage arm is removed from slot in firebox. Assembly can now be removed while on its side.

Installation is reverse of disassembly.

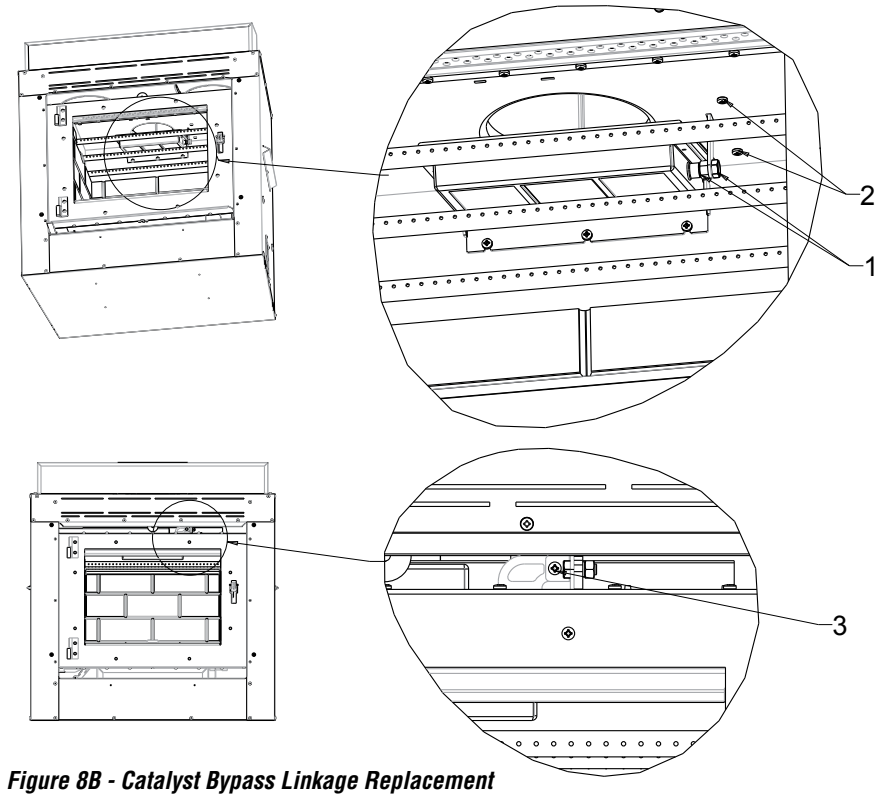

Figure 8B - Catalyst Bypass Linkage Replacement

NOTE: DIAGRAMS & ILLUSTRATIONS ARE NOT TO SCALE.

CATALYTIC COMBUSTOR TROUBLESHOOTING GUIDE

Problem	Condition	Solution
Ash Build-up on Combustor Surface	Normal	Ash, a fluffy light gray powder, and soot, accumulate on the combustor surfaces in normal use. Ashes accumulate as a result of the smoke being burned within the combustor and carried out of the firebox by the chimney draft. Soot is the result of previous creosote deposits having been burned off or foreign materials being burned in the firebox. This is normal and will be eliminated during the next burn.
Combustor Clogging	Creosote	Combustor should be cleaned *(see **Page 11**)*. Do not use air pressure or sharp objects to clean combustor.
Broken Combustor	Crack or Break	The combustor is manufactured from a ceramic material and therefore can crack or break. However, the combustor will still function if cracked. If combustor is broken into pieces and dis-lodged from the housing, it will need to be replaced.
Combustor Malfunction	Not Working	The combustor should last a minimum of 10,000 hours of operation. The combustor will lose catalytic capability over time. When you see continuous smoke coming from the chimney, the combustor should be cleaned. If the smoking persists, the combustor should be replaced.
Combustor Problem	Thermal Erosion	This combustor does NOT experience thermal erosion. “Not applicable.” Applies to honeycomb combustors only.
Combustor Problem	Thermal Cracking	This combustor does NOT experience thermal cracking. “Not applicable.” Applies to honeycomb combustors only.
Combustor Problem	Combustor Peeling	This combustor does NOT experience combustor peeling. “Not applicable.” Applies to honeycomb combustors only.
Reduced Combustor Performance	Combustor Clogging or Fatigue	Signs of combustor fatigue include reduced heat output and sluggish performance. Inspect and clean combustor. Replacement may be required. Monitor performance and smoke coming from chimney.
Combustor not glowing	Late stage of burn	Combustor does not need to be glowing to be working. Check smoke exiting chimney to help determine if combustor is working properly.
Appliance burning too hot or fast	Doors are not properly closed.	Close doors securely. Check door gasket.
	Excessive draft	Adjust primary air control to lower setting.
Back-puffing or sudden internal ignitions	Operating technique	Open bypass and primary air control before opening to reload and keep it open a few minutes after reloading.
	Burn rate too low	Open air damper to allow for hotter burn.
	Chimney down draft	In high wind areas, a specially designed wind cap may be necessary.
	Combustor or louvered housing plugged	Clean combustor / louvered housing of accumulated fly ash.
Appliance Smokes	Operating technique	Open bypass and air damper prior to reloading appliance.
	Blocked Chimney	Examine chimney and vent pipe for blockage and creosote accumulations. Check spark arrestor screen on your cap, if you have one.
	Blocked outside air duct	Check the outside air inlet for blockage caused by snow, debris, or insects.

NOTE: DIAGRAMS & ILLUSTRATIONS ARE NOT TO SCALE.



Healthy Combustor - Unused



Combustor Problem - Broken Combustor



Combustor Problem - Ash, a fluffy light grey powder, and soot, accumulate on the combustor surfaces in normal use. In extreme situations combustor can become clogged and should be cleaned.



Combustor Problem - Cracked Combustor

Figure 9

REFRACTORY REPLACEMENT

1. Bottom Refractory
2. Front Refractories
3. Left Side Refractory
4. Right Side Refractory
5. Back Refractory
6. Left Ceramic Baffle
7. Right Ceramic Baffle

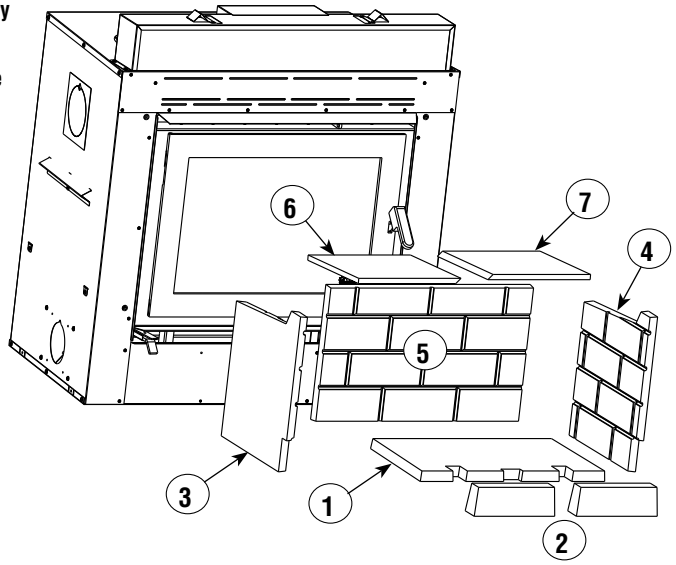

Figure 10

The intense heat of the fire will normally cause hairline cracks in the refractory. These cracks can be minimized by proper curing as described in "First Fires". They will not normally diminish the effectiveness of the refractory. If large cracks develop, then the refractory should be replaced. To replace the refractory bricks, follow these steps (see ***Figure 10***):

1. Remove the bottom refractory
2. Remove the front refractories
3. Remove the left side refractory
4. Remove the right side refractory
5. Remove the back refractory
6. Remove the front ceramic baffle
7. Remove the rear ceramic baffle

To install the new refractories, follow the above steps in reverse.

DISPOSING OF ASHES

Whenever ashes get 3 to 4 inches deep in your firebox, and when the fire has burned down and cooled, remove excess ashes. Leave an ash bed approximately 1 inch deep on the firebox bottom to help maintain a hot charcoal bed.

Remove ashes only when the fire is out and the ashes are cold (24 to 48 hours after the fire is out).

Do not leave the ashes in the house as they give off carbon monoxide and other toxic gases.

⚠ WARNING

Disposal of Ashes: Ashes should be placed in a steel container with a tight fitting lid and moved outdoors immediately. The closed container of ashes should be placed on a non-combustible floor or on the ground well away from all combustible materials, pending final disposal. If the ashes are disposed of by burial in soil or otherwise locally dispersed, they should be retained in the closed container until all cinders have thoroughly cooled.

NOTE: DIAGRAMS & ILLUSTRATIONS ARE NOT TO SCALE.

DOOR REMOVAL

To remove the door, simply pull the door up from the hinges (see ***Figure 11***). The door adjustment has been set at the factory. If the fit is still not perfect, you can adjust the door using the hinge screws.

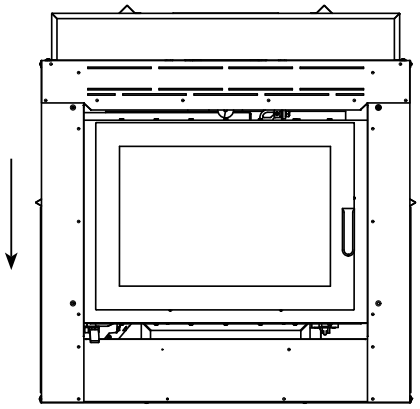

Figure 11 - Door Installation

DOOR ADJUSTMENT

The door may need to be adjusted to be completely airtight. The gaskets' air-tightness can be adjusted using two adjustment screws located on the right side of the fireplace facade (An Allen key #1/8 – not supplied - will be necessary for this adjustment).

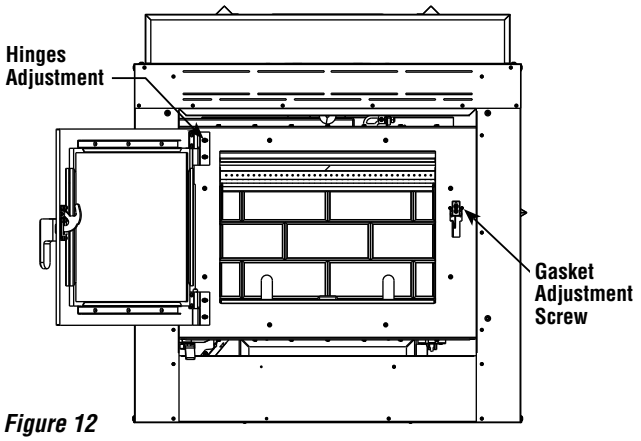

Figure 12

⚠ WARNING

- **Use only a IHP glass door, specifically designed for the fireplace.**
- **The fireplace cannot be operated without door. Consult your dealer to select the correct replacement door.**
- **Important! To assure proper alignment of glass door: Install this fireplace in a square and plumb condition, using shims as necessary at sides and/or bottom.**

Checking Door Seal

A one-inch strip of paper may be used to perform a test of the integrity of the door seal. Close the door on the paper in at least eight points. It is normal to feel only a slight amount of friction. The door gasket does not need to be "tight" in all areas, since a small amount of leakage is not hazardous or detrimental to the performance of your fireplace.

GLASS CARE

Glass Replacement

The glass used for the fireplace is a high temperature ceramic glass (1,400° F / 760° C). If the glass breaks, it must be replaced with an identical ceramic glass. Tempered glass or ordinary glass will not withstand the high temperatures of the fireplace. Replacement glass should be purchased from a IHP dealer (see "Replacement Parts", ***Page 28***).

DO NOT OPERATE THE UNIT WITH CRACKED OR BROKEN GLASS.

Glass Cleaning

The fireplace is designed to keep the glass clean under normal operating conditions. If the fireplace is operated continuously with the combustion air controls closed, the glass will tend to get dirty unless the fuel, firebox and glass are maintained at hot temperatures (see "Refueling For Best Performance"). To clean the glass, there are a number of specially designed cleaners. Your IHP dealer can recommend a suitable cleaner which is available in your area. Regular household glass cleaners will not clean creosote. **Do not use abrasives such as steel pads, steel wool or oven cleaner as they will scratch the glass.**

DO NOT USE CHEMICAL GLASS CLEANERS ON PAINTED SURFACES AS IT MAY CAUSE THE PAINT TO PEEL.

CAUTION : DO NOT ALLOW WINDOW CLEANER TO GET IN CONTACT WITH DOOR GASKET OR PAINT ON FACADE OR DOOR. ONCE CLOSED, CONTACT OF GLASS CLEANER WITH THE FIREPLACE FACADE CAN PROVOKE PAINT PEELING OFF.

Gasket Replacement

Remove the door from the unit (see ***Page 12***) and lay it on a clean unabrasive surface. To replace the gasket, first remove all of the old gasket and gasket cement. Make sure that the surface is totally clean before applying new cement (a high temperature silicone caulking rated at 500° F [260° C], is suitable) or adhesion problems may result. Apply gasket cement to the gasket channel and install the new gasket. This replacement part is available from your IHP dealer in the following dimensions:

Gasket	Length*	Dimensions	Part No.
Around Glass	69 (1753)	1 x 3/16 (25 x 4.8)	PR-SR1685H
On Door Frame	73 (1854)	3/4 dia (19.5)	PR-SR1823O

Table 1 ****NOTE: Inches (millimeters)***

NOTE: DIAGRAMS & ILLUSTRATIONS ARE NOT TO SCALE.

FIREPLACE INSTALLATION

Locating The Fireplace

The best location to install your fireplace is determined by considering the location of windows, doors, and the traffic flow in the room where the fireplace is located, allowing space in front of the unit for the hearth extension and the mantel, and taking into consideration the location of the hot air ducts (optional), outside air kit (included with fireplace) and chimney. If possible, you should choose a location where the chimney will pass through the house without cutting floor or roof joists (see fireplace dimensions ***Page 15***).

Usually, no additional floor support is needed for the fireplace. The adequacy of the floor can be checked by first estimating the weight of the fireplace system. Weights are given on ***Page 28***. Note the floor construction and consult your local building code to determine if additional support is needed.

This fireplace may be installed directly on the floor or on a raised base (for proper guidelines, refer to "Hearth Extension Requirements") and a minimum of 6'8" (2 m) measured from the base of the appliance to the ceiling is required.

When selecting the location, the chimney outlet position and the direction of the wind are important factor affecting the chimney performance. To allow a maximum draft and to reduce wind turbulence, the chimney must:

- Penetrate the highest part of the roof.
- Be installed as far as possible of roof offsets, trees or any other obstructions that may cause wind turbulence and back drafts in the chimney.
- The least amount of offsets (elbows) possible. ***NOTE:*** *A maximum of 2 offsets is allowed.*

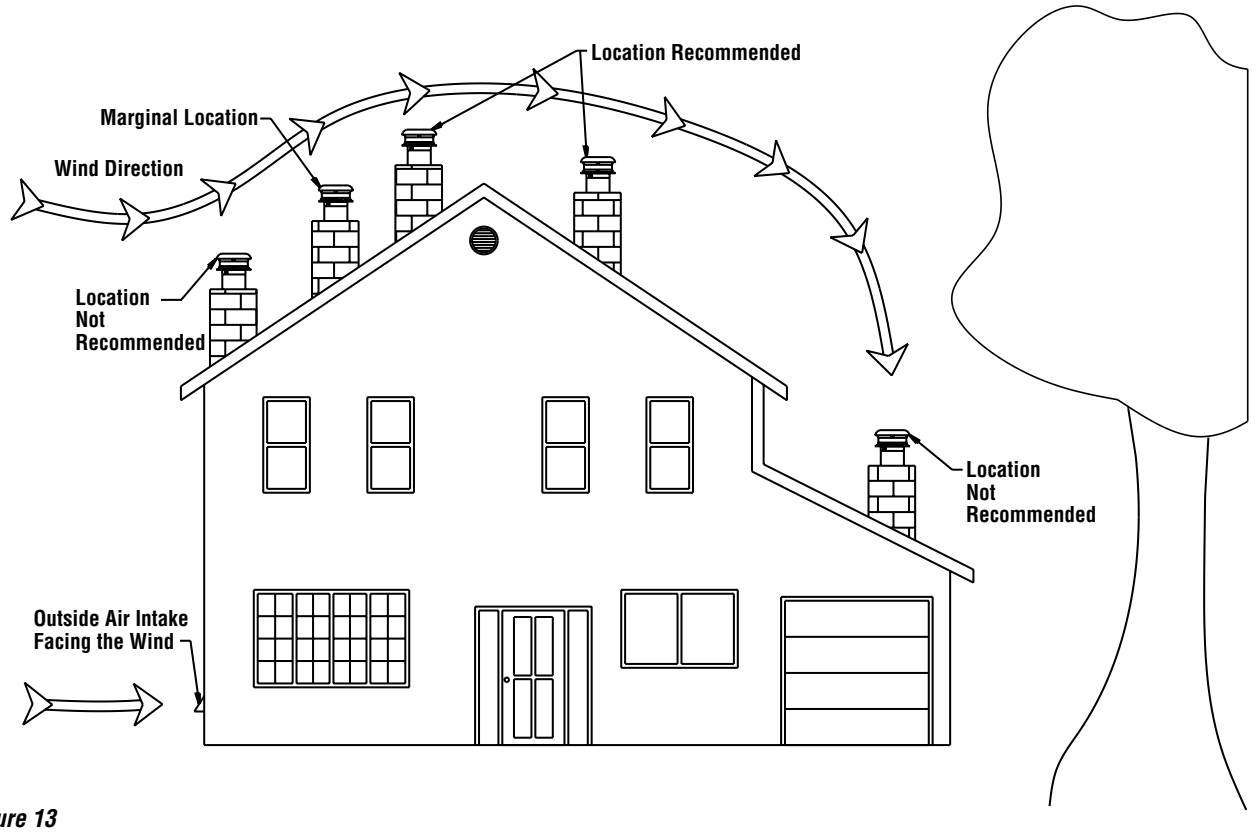

Figure 13

NOTE: DIAGRAMS & ILLUSTRATIONS ARE NOT TO SCALE.

Optional Cast Facade installation

Install the Facade per instructions provided in Facade Kit (ordered separately - see ***Page 27***).

Framing, Facing And Mantel

The construction of the framing, facing, and mantel must be in accordance with the standards and the following illustrations (***Figures 14 and 15***):

A. Frame the fireplace using 2" x 3" or heavier lumber.

B. WARNING: Combustible materials cannot be used in the space directly above the fireplace, except for the studs above the facade that support the facing and mantel. This area must remain empty for a height of 6'8" (2,032 mm) measured from the base of the appliance.

C. Frame the fireplace with vertical studs at the sides of the fireplace running from floor to ceiling (see ***Figure 16***). If combustible facing is to be used, position the studs back, from the front edge of the fireplace (a space that is the thickness of the facing material, so that the facing can be installed flush with the fireplace facing). Frame headers between the vertical studs only as follows:

- Place 2" x 3" or 2" x 4" headers, only along the upper part of the front, side and back faces (some codes may require a 2" x 6" on an outside bearing wall). Do not put wood or any combustible material within the area above the fireplace except on the front facing.
- Place headers only as required to support the facing and mantel.

D. WARNING: The fireplace must not be in contact with any insulation or loose filling material. Cover the insulation with drywall panels around the fireplace.

HEARTH EXTENSION REQUIREMENTS

The fireplace may be installed directly on a combustible floor. The supplied safety metal strip must be positioned as follows: One half under the front of the fireplace and the other half must extend on the floor over which the hearth extension will be built (see ***Figure 14***).

* The safety metal strip must cover the entire width of the fireplace

The combustible floor in front of the fireplace must be covered with at least a 1/2 inch of non-combustible material (tile, marble, stone, etc). See ***Figure 15***.

COLD CLIMATE INSTALLATIONS

Climates where temperatures will fall below 32° F (0° C).

The heating performance of the appliance will vary depending upon the level of insulation, house design, how the appliance is operated, etc.

If this fireplace is being installed in a cold climate, it is especially important to seal all cracks around the fireplace and wherever cold air could enter the room with noncombustible material.

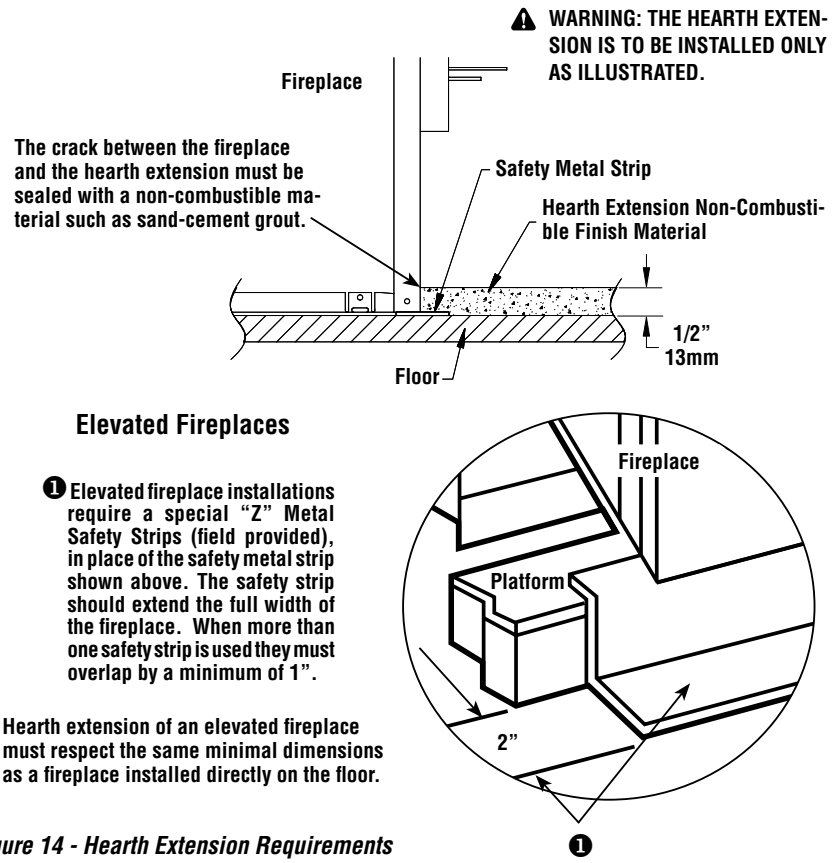

Figure 14 - Hearth Extension Requirements

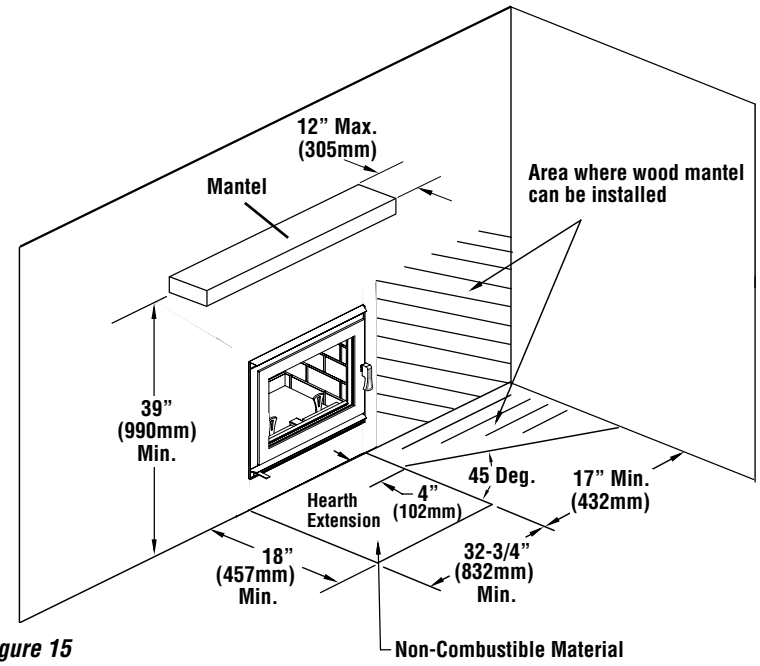

Figure 15

Also, the outside air inlet duct should be wrapped with noncombustible insulation to minimize the formation of condensation.

Do not place insulation materials directly against the chimney sections. We recommend that you use the insulated wall radiation shield since it will maintain the home's thermal barrier. AC chimney is NOT recommended in very cold climates (in areas with temperatures below 32°F (-0°C).

NOTE: DIAGRAMS & ILLUSTRATIONS ARE NOT TO SCALE.

FRAMING DIMENSIONS		
A	36”	915 mm
B	37-3/4”	959 mm
C	31-3/8”	797 mm
D	14-7/8”	378 mm
E	74-3/8”	1889 mm
F	37-1/4”	946 mm
G	*22”	559 mm
J	52-5/8”	1337 mm
K	8”	203 mm

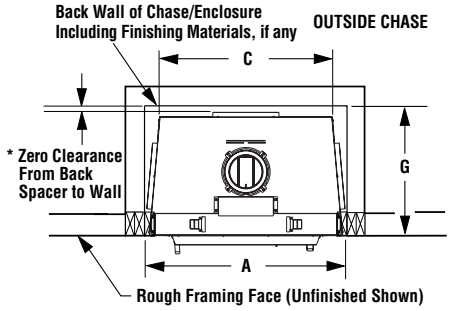

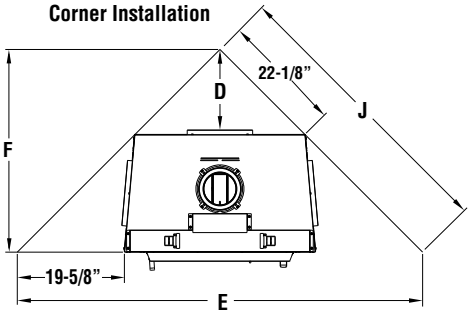

Combustible materials can NOT be used in the space directly above the fireplace. Do not fill the space above the fireplace with any material (Except the wood framing)

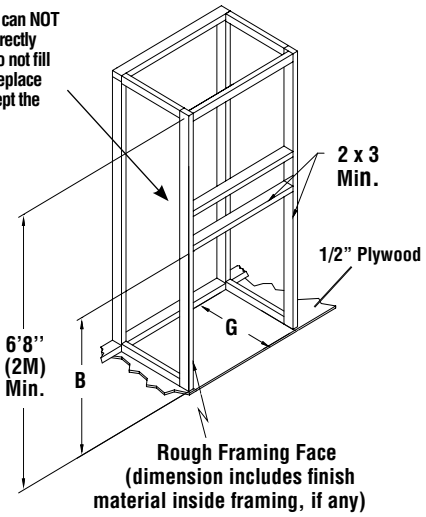

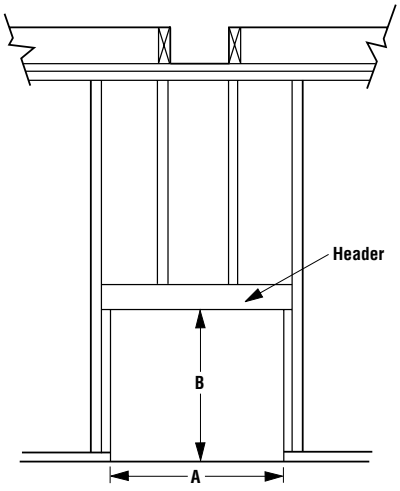

* Total depth is 22-1/2 inches (572mm) including the back standoff minus 1/2 inch (13mm) for drywall to be flush with the facing.

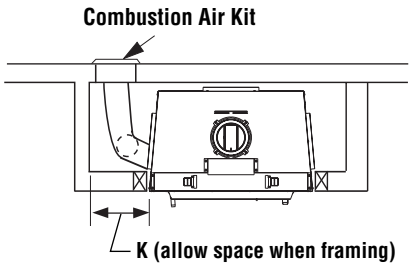

NOTES
Diagrams, illustrations and photographs are not to scale - consult installation instructions. Product designs, materials, dimensions, specifications, colors and prices are subject to change or discontinuance without notice.
All framing dimensions calculated for 1/2” dry wall at the fireplace face. If sheathing the chase or finishing with other thickness materials, calculations will need to be made.
** The fireplace must not be in contact with any insulation or loose filling material. Cover the insulation with drywall panels around the fireplace.*

WARNING: IF YOU ARE INSTALLING THE CAST FACADE PLEASE REFER TO THE INSTALLATION SHEET PROVIDED WITH THE CAST FACADE TO PLAN YOUR INSTALLATION.

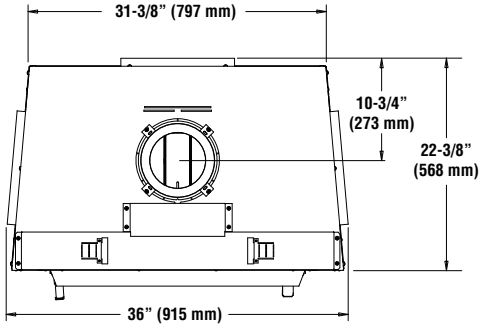

Top View

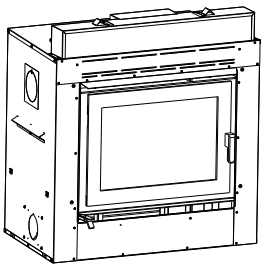

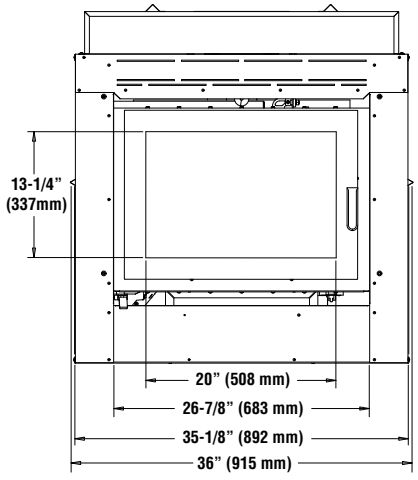

Front View

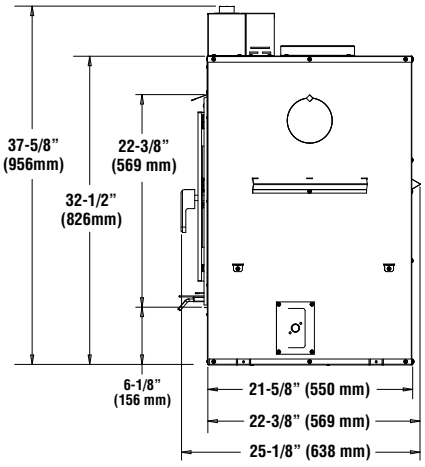

Right Side View

Figure 16 - Framing Dimensions

NOTE: DIAGRAMS & ILLUSTRATIONS ARE NOT TO SCALE.

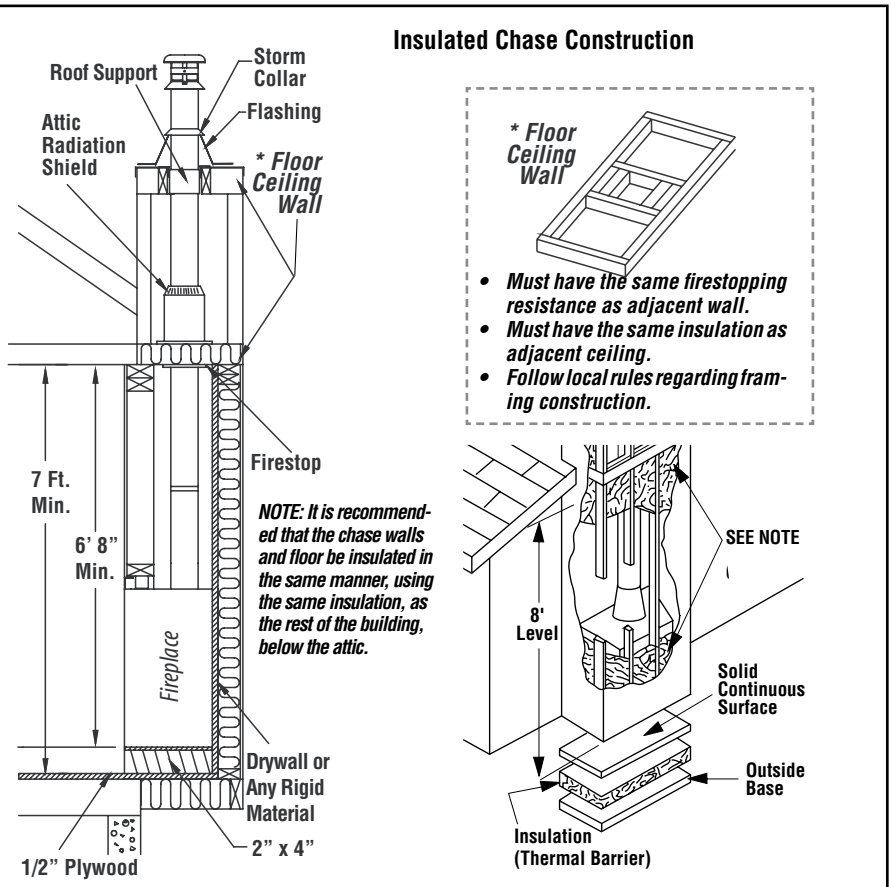

Figure 17

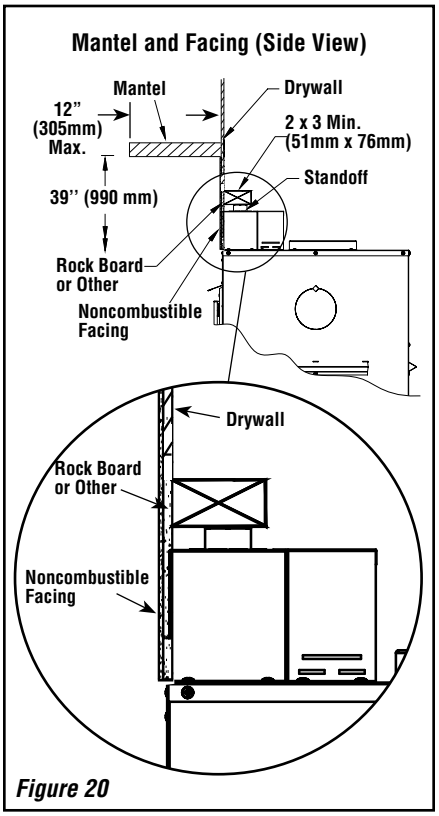

Figure 20

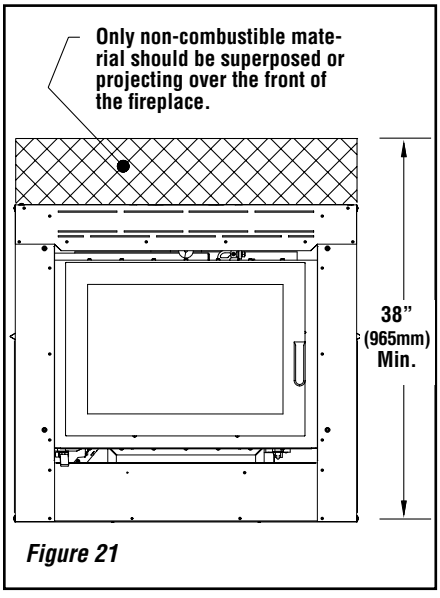

Figure 21

Nailing Flanges

Four nailing flanges are provided to secure the fireplace to the floor *(see **Figure 18**)*. Bend the nailing flanges down so that each flange is flush with the floor, then using nails or screws, secure the fireplace to the floor (2 places each side). The heads of the screws or nails must be large enough to completely cover the holes in the nailing flanges.

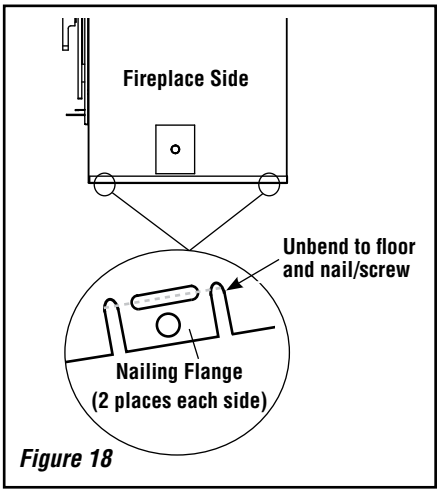

Figure 18

Mantel and Facing

The mantel must be installed at least 39" (990 mm) above the base of the fireplace *(**Figures 19-22**)*.

Facing

1. Combustible material must be installed flush with the fireplace. It may not project in front of and on the fireplace (i.e. the steel facade of the fireplace) *(**Figure 19**)*.
2. Non-combustible materials such as brick, stone or ceramic tile may project in front of and onto the fireplace facing up to the tiling flange *(**Figure 19**)*.

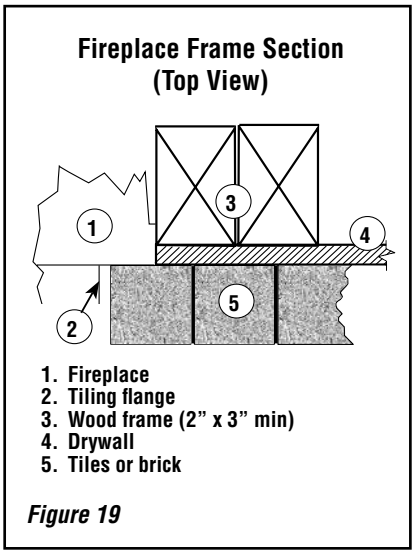

Figure 19

NOTE: DIAGRAMS & ILLUSTRATIONS ARE NOT TO SCALE.

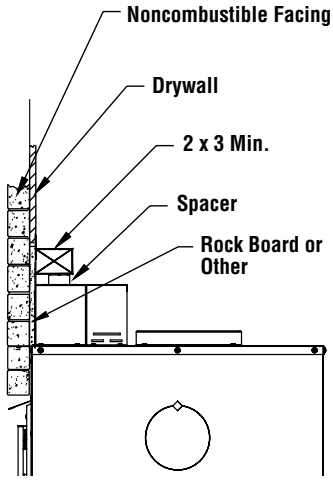

Figure 22

FIREPLACE BLOWER

The fireplace is equipped with a blower. It is located in the bottom of the fireplace towards the back. It uses 120V and must be connected to the main electrical circuit by a qualified electrician prior to enclosing the fireplace.

For connection, use the electrical box supplied with the unit located on the bottom right side of the fireplace. To access the electrical box remove the four screws, pull out the plate and box and install the electrical receptacle.

A wall on/off switch must be installed to control the blower. An optional heat switch and variable speed control are available (see ***Page 28***).

If installed, the heat activated switch must be connected to the blower main cable and the magnets must be stuck under the fireplaces firebox accessible through the side electrical box access plate.

If a repair must be done after the fireplace is installed an access plate is located under the bottom refractory. Remove the bottom refractory, unscrew the access plate, clean black cement sealing the access plate and do the repair.

NOTE: DIAGRAMS & ILLUSTRATIONS ARE NOT TO SCALE.

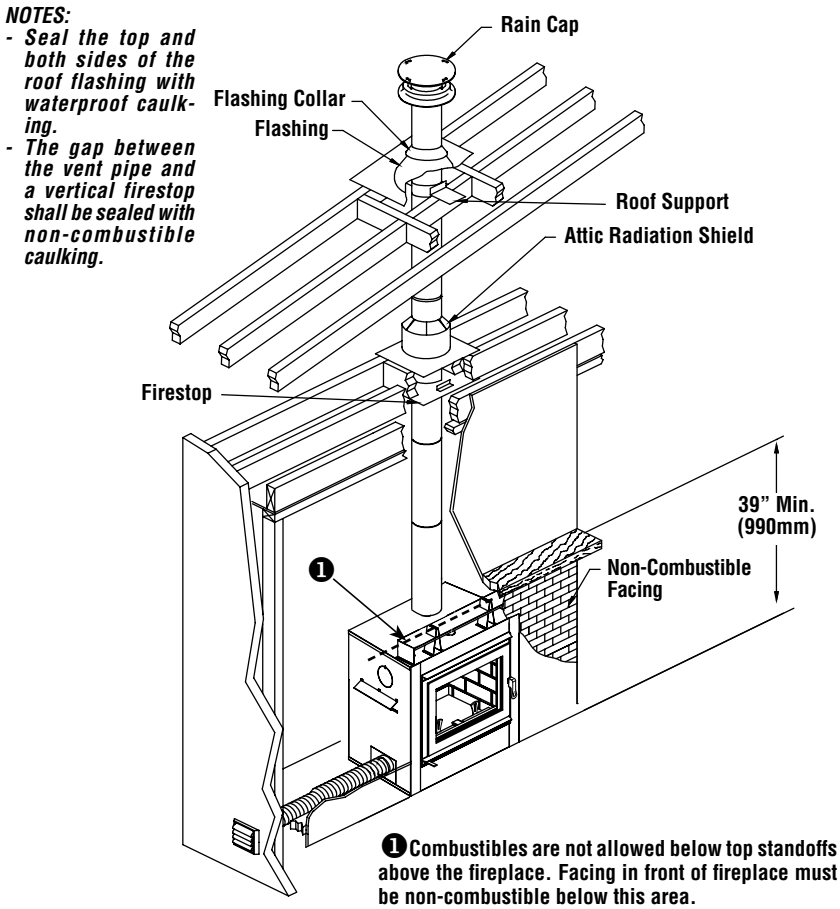

Figure 23

The duct system must be installed respecting the following:

1. Remove the plates closing up the 8" dia. holes on top of the fireplace. Then, cut the insulation in order to obtain two 8" dia. openings. Fix the adaptors on the fireplace openings by turning clockwise (***Figures 24 and 25***).
2. Maintain at least a 2" (50 mm) clearance between the ducts and any combustible material; the required hole size is 13" x 13" (330 mm x 330 mm).

   Exception #1: For the grills, the framing can be 10-3/4" x 10-3/4" (275 mm x 275 mm) to provide the clearance as required by the integral spacers on the double outlet duct system.
3. The maximum number of elbows in a run of duct is two.
4. Maintain at least 6-1/2" (160 mm) clearance from the outlet grill framing to a combustible ceiling, side wall, mantel or floor.
5. When traversing a combustible wall or floor, a firestop must be installed at the wall or floor penetration. The hole size must be 13" x 13" (330 mm x 330 mm)
6. Do not connect the hot air ducts to a central heating system. Malfunction of the heating system's blower will cause the fireplace to overheat. A furnace duct is only single wall and not double wall as is required for the fireplace hot air exhaust.
7. Use only IHP grills and components as described in this manual. Other grills or registers, for example, may be too restrictive and may overheat the fireplace or ceiling.
8. Do not use insulated flexible ducts as they will overheat.
9. Do not use tees or any other components than the ones specifically listed here.
10. Never allow the ducting to pitch down as hot air will be trapped creating a fire hazard. **Never route the ducting downwards.**
11. The hot air outlet grills must be installed with the louvers pointing downwards in order to prevent overheating adjacent ceilings.

CENTRAL FORCED AIR KIT

NOTE: Not tested under EPA certification. If installed, this appliance no longer qualifies for EPA certification.

The knock-outs provided on the back and on the sides of the fireplace allow the connection of insulated flexible pipe which enables you to heat adjacent rooms up to 50 feet from the fireplace hot air outlet.

The ducting system must be installed as described below:

A) Remove knock-out plate and cut insulation the adaptor at the back and/or the side of the fireplace. Fix the adaptor by twist-locking it to the fireplace. You can use more than one outlet on the fireplace *(see **Figure 24**)*.
B) Attach the 5" flexible pipe, using the collars provided. **Important: Make sure that the plastic wrapping around the flexible pipe will not be in contact with the fireplace.**
C) Route the flexible pipe to the chosen location. The ducting system can be installed either in an upper room or in a lower room.
D) Attach the flexible pipe to the blower, using the collars *(**Figure 25**)*.
E) Fix the back draft damper to the blower outlet.
F) Attach a flexible pipe to the fan / flexible pipe adapter (square to round) and stretch it up to the location where the heat is required.
G) At that point, the flexible pipe can be attached to any air distribution grill.
H) Install the blower heating and cooling thermostat (HCTW) in that part of the house to be heated by the hot air duct. The thermostat can be switched to a cooling thermostat and installed in the same room as the unit. This thermostat will turn on the blower when the room where the fireplace is located becomes too hot.

This option requires electricity. Make sure that the connections to the blower have been made according to the local codes and comply with their requirements (see instruction provided with the thermostat). For more information regarding central forced and ducting, refer to the BISFWK-1 installation sheet provided with the kit.

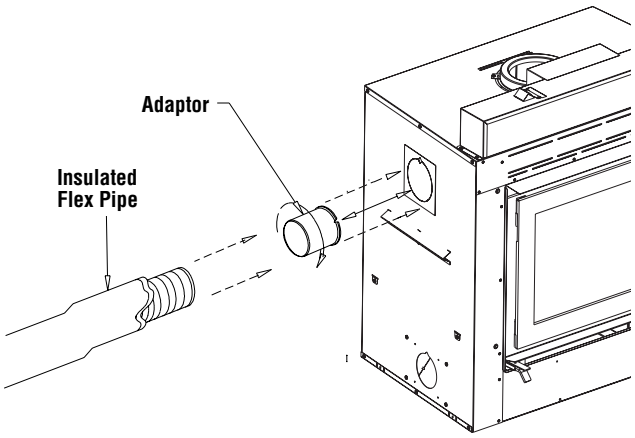

Figure 24

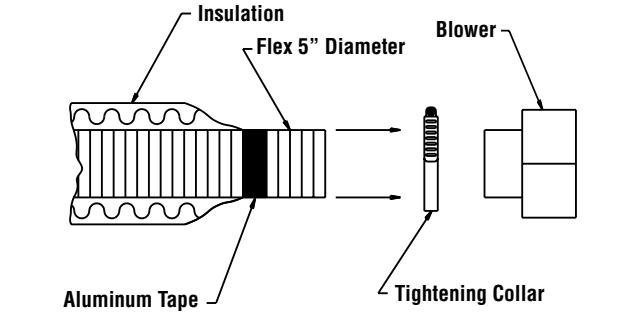

Figure 25

OUTSIDE AIR KIT

It is mandatory to install an outside air connection to the fireplace. The following components are required and are included with the fireplace:

- Outside air kit (includes 4 inch flex that goes up to ten (10) feet long)
- 4" Adaptor for fireplace connection

Outside Air Installation

The outside air assembly may be installed according to the following requirements:

A) Duct length should be kept to a minimum. The maximum length of a 4" interior diameter (100 mm) insulated flexible duct is 20 feet (6.1 m). The duct can be extended to a maximum of 40 feet (12 m) using a 6" interior diameter (150 mm) insulated flexible duct (See note below).

B) The air intake register must not be installed more than ten (10) feet (3050 mm) above the base of the fireplace.

C) The fresh air must come from outside the house. The air intake must not draw air from the attic, basement or garage.

D) The air intake should be installed where it is not likely to be blocked by snow or exposed to extreme wind and away from automobile exhaust fumes, gas meters and other vents.

E) The duct and register may be installed above or below floor level.

NOTE: *We recommend not to exceed 20 feet of 4" flexible pipe. If you require a longer length we recommend that you use a 5" diameter flexible pipe for the complete run up to 30 feet and a 6" diameter pipe for a run of up to 40 feet.*

Make a 4-1/4" (110 mm) hole in the outside wall of the house at the chosen location. From outside, place the outside air register in the hole (open side down) and fasten the register to the wall with screws as shown (see ***Figure 26***). Slip the pipe into the insulated sleeve. Place the insulated pipe over the register tube and over the fireplace's outside air connector (see ***Figure 27***). At each end, carefully pull back the insulation and plastic cover exposing the flexible pipe. Using the aluminium tape provided, wrap the tape around the joint between the flexible pipe and the air inlets. Carefully push the insulation and plastic cover back over the pipe. Using aluminium tape, fasten the plastic cover in place.

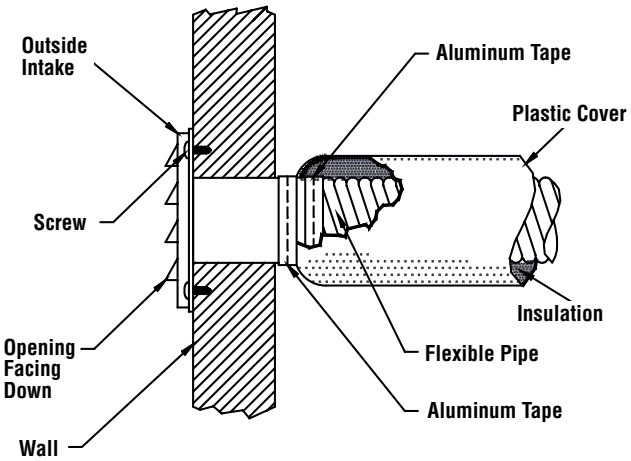

Figure 26 - Outside Connection

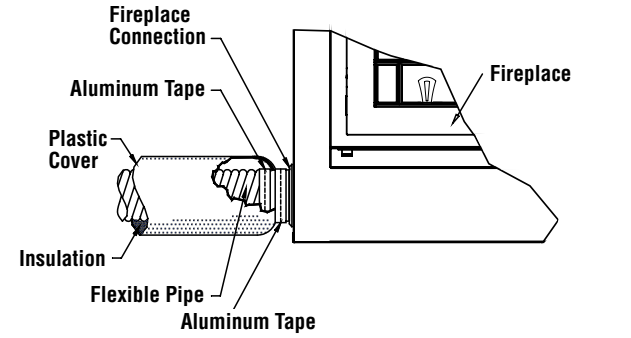

Figure 27 - Outside Air Connection To The Fireplace

NOTE: DIAGRAMS & ILLUSTRATIONS ARE NOT TO SCALE.

DRAFT REQUIREMENTS

Draft is the force which moves air from the appliance up through the chimney. The amount of draft in your chimney depends on the length of the chimney, local geography, nearby obstructions and other factors. Too much draft may cause excessive temperatures in the appliance and may damage the catalytic combustor. Inadequate draft may cause backpuffing into the room and `plugging' of the chimney or the catalyst.

Inadequate draft will cause the appliance to leak smoke into the room through appliance and chimney connector joints.

An uncontrollable burn or excessive temperature indicates excessive draft.

THE CHIMNEY SYSTEM (UNITED STATES & CANADA)

Chimney Installation Notes

1. This appliance may be installed only with IHP 6" Snap-Pak chimney in the United States or Security Chimney models ASHT & S2100 or DuraVent model DuraTech Canada (DTC) in Canada. The 6" & 7" Security systems are approved in Canada with the use of an adaptor.
2. If possible, install an interior chimney as it will provide better performance. In areas with continuous temperatures below -18° C (0° F), the use of an exterior chimney increases the likelihood of operating problems such as low draft, high rate of creosoting, and poor start-up characteristics. Exterior chimneys are also prone to down-draft and flow reversal. Installations, which are located on lower floors in the house-such as in a basement, in combination with an outside chimney, are especially prone to flow reversal.
3. A chimney venting a fireplace shall not vent any other appliance.
4. The minimum chimney height is twelve (12) feet (3.7 m) above the unit; the maximum is 30 ft (9 m). Add 3 ft (0.9m) for one set of offsets and 5ft (1.5m) for two sets. To compensate for altitude, add 18" (450 mm) to the chimney for every 2,000 feet (600 m) above sea level.
5. **All chimney installations must include at least one support.** Reducing the amount of chimney weight on the fireplace will help avoid the noise created when the fireplace expands. This can be achieved by having the chimney supported by the supports. The maximum chimney length that can be supported by the fireplace is nine (9) feet (2.75 m).
6. The chimney must extend at least three (3) feet (915 mm) above its point of contact with the roof and at least two (2) feet (610 mm) higher than any wall, roof or building within ten (10) feet (3m) of it ***(Figure 33)***.
7. If the chimney extends higher than five (5) feet (1,500 mm) above its point of contact with the roof, it must be secured using a roof brace.
8. A rain cap must be installed on top of the chimney. Failure to install a rain cap may cause corrosion problems.
9. Cut and frame square holes in all floors, ceilings, and roof that the chimney will go through to provide a 2" (50 mm) clearance between the chimney and any combustible materials. Do not fill this 2" space with insulation or any other combustible material.
10. Portions of the chimney which may extend through accessible spaces must be enclosed to avoid contact with combustible materials or damage to the chimney.
11. When offsets are used, the pipe may not penetrate a ceiling or floor unless it is running vertical (no 30° offsets).

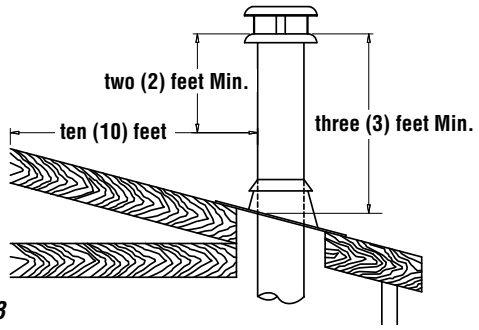

Figure 33

NOTE: *2" clearance to combustibles around chimney components required.*

NOTE: *Blown or fill type insulation materials must not be in contact with the fireplace or in the enclosure frame as described in "Enclosure" section.*

NOTE: *Local codes may not require firestopping at the ceiling levels for outside chase installations. However, it is recommended for safety and the reduction of heat loss.*

UNITED STATES ONLY CHIMNEY INSTALLATION INSTRUCTIONS USING IHP SNAP PAK (SP)

UNITED STATES APPROVED VENTING SYSTEMS:

6" diameter chimney: Model IHP Snap-Pak, including:
- Chimney lengths
- Elbows *(where necessary)*
- Associated components as per these installation instructions

INSTALLATION THROUGH FLAT CEILING(S)

1. Using framing lumber equal to ceiling joist size, frame ceiling opening as shown in ***Figure 34*** and ***Table 3***.

Chimney Flue Diameter	
	6"
A	**12-7/16"**
B	**12-7/16"**

Table 3

If the area above the ceiling is an attic, go to step 5.

2. Install SNAP-PAK chimney sections starting at the top of the appliance. Leave the first section loose until the installation is complete to allow the chimney to be rotated, easing the installation of any offsets if they are used. Secure subsequent sections by pushing together until stop-locked *(see **Figure 35**)*.
3. **If IHP Elbows are to be used because the chimney is to be offset, refer to "Installation of Elbows" section.** Directly above the Center of the flue in the ceiling support, mark the ceiling. A plumb bob is normally used to find the center. Cut an opening in the ceiling using ***Figure 34*** and ***Table 3***.
4. At each ceiling penetration, a firestop (SPFS) is required. Insert the SPFS into the joist area prepared in ***Figure 34***.

NOTE: When the chimney extends between floors-which can be occupied-the chimney must be enclosed to prevent contact. As previously noted, 2" minimum clearance to combustibles is to be maintained at all times.

5. The first chimney section through the joist area into attic is to be approximately two (2) feet. If the pipe sections in the attic are not enclosed, an insulation shield (SPIS) must be installed. Lower the insulation shield (SPIS) over the SP pipe until the SPIS flange is resting on the joist. Secure the SPIS in place by nailing the flange to the joist. See ***Figure 36***. If the section within the attic area is to be chase enclosed, the SPIS is not required.

   WARNING: Do not place any type of insulation in the required clearance spaces surrounding the chimney.
6. Continue the chimney to the roof. See "Flashing Installation"and "Termination" sections.

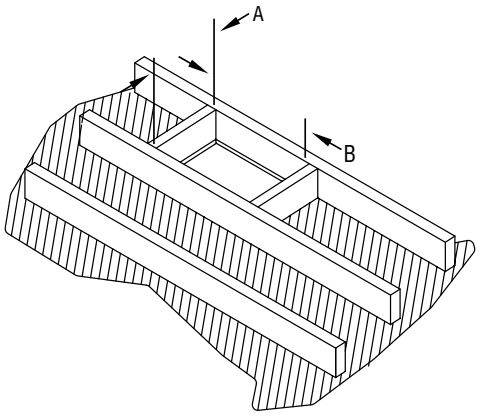

Framing lumber of equal size to the joist should be used.

Figure 34

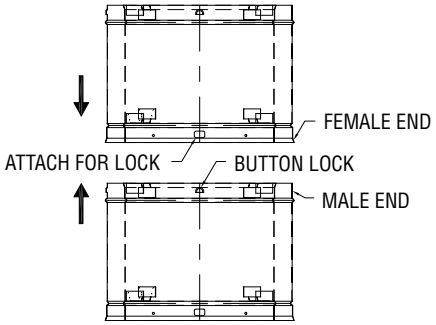

Figure 35

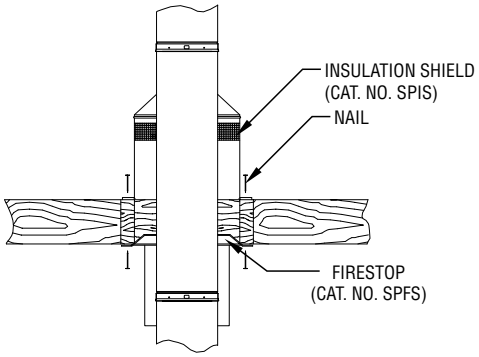

Figure 36

INSTALLATION THROUGH A SIDE WALL

1. It is recomended that exterior mounted chimneys be enclosed below the roof line in geographical areas experiencing sustained low ambient temperatures to help reduce or limit condensation, creosote buildup and poor draft.
2. Locate the area where the chimney section is to penetrate the vertical wall studs. Cut and frame an opening so that the flue is centered between the vertical wall studs. Frame opening per ***Figure 37*** and ***Table 4***.

Chimney Flue Diameter	
	6”
A	**12-7/16”**
B	**13”**

Table 4

3. A 2-piece wall firestop (SPWF) must be installed in the framed opening from outside. The stainless portion is first installed from th outside of the opening. Push the remaining half through the opening from the inside until the plate is flush with stud. Use four (4) # 10 x 2-1/2” wood screws to attach opening *(see **Figure 38**)*. Seal the outside plate with RTV sealant or similar.

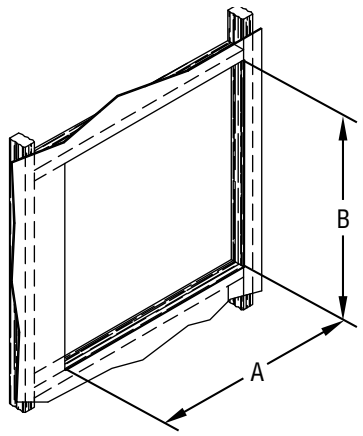

Figure 37

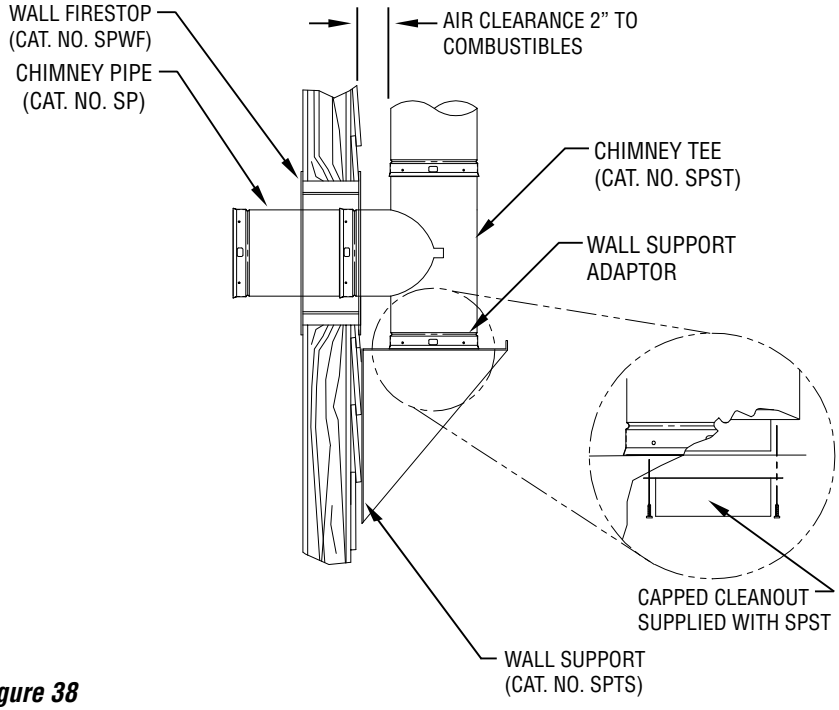

Figure 38

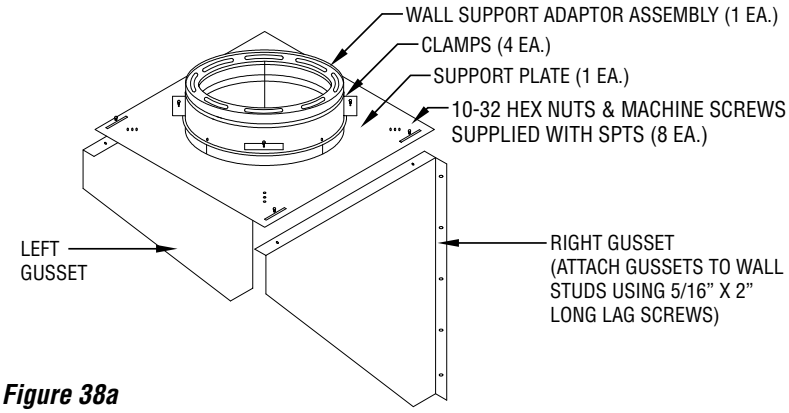

Figure 38a

4. Remove the wall support adaptor pieces from the SPTS box and attach the adaptor to the bottom of the tee by inserting it into the bottom of the tee and push to lock.
5. Push the side portion of the tee into the opening in the wall firestop.
6. Assemble the right and left gussets to the support plate using the hardware provided.
7. Attach wall support plate to wall support adaptor using 4 clamps provided. Do not tighten. *(See **Figure 38a**).*
8. Align the wall support with the wall and secure it to the wall studs using 5/16” x 2” lag screws (not provided). **DO NOT SECURE TO SIDING.** For masonry walls, use 5/16” x 2” masonry lag bolts.
9. Install the tee cap to the bottom of the wall support adaptor with a minimum of two (2) #10 x 1/2” sheet metal screws.
10. Position the tee and the adaptor on wall support to maintain 2” clearance to combustibles. AT THIS POINT TIGHTEN CLAMPS.
11. Slide IHP chimney pipe into top of tee. Align male and female ends. Push down on pipe sections until locked. As sections are added, it will be necessary to secure them to the outside wall with bands (SPWB) at eight foot intervals and 2” from combustibles. Wall Bands (SPWB) are secured to the chimney by placing band around the chimney and tightening clamping bolt. The assembly is anchored to the wall studs (not the siding) with 5/8” x 2” lag bolts. To complete the chimney installation, see “Flashing Installation” and “Termination” sections.

NOTE: DIAGRAMS & ILLUSTRATIONS ARE NOT TO SCALE.

ELBOW INSTALLATION

1. IHP provides a 15˚ (SPSE15) and 30˚ (SPSE30) Elbow to allow chimneys to avoid framing members or roof peaks. A maximum of 30˚ from the vertical is allowed, and a total of four elbows (two pair) for each chimney installation. Maintain 2" clearance to combustibles.
2. Attach the elbow(s) to the chimney pipe or other support part and push to lock. Using the offset chart, add chimney sections between the elbows. A support band (SPSB) is required at the upper elbow of the pair to support the load, as shown in ***Figure 39***. Attach the upper elbow to bring the chimney back to vertical.

Offset combinations: see *Table 5* and illustration, *Figure 40*.

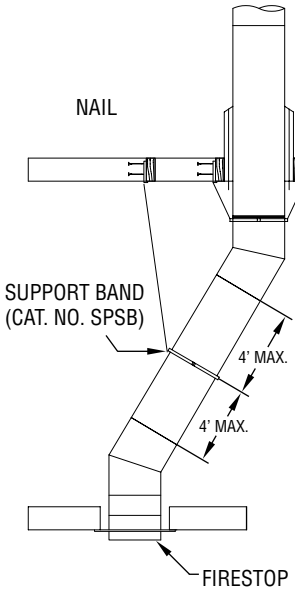

Figure 39

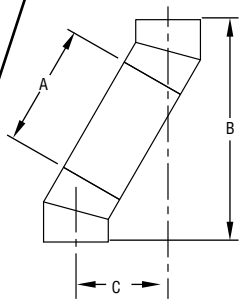

Figure 40

6" DIAMETER CENTER LINE OFFSET TABLE					
A		**15° Angle**		**30° Angle**	
Length	No. Pcs.	B	C	B	C
0	0	18-7/16"	2-1/4"	20-3/16"	5"
6"	1	22-13/16"	3-3/8"	24-1/16"	7-1/4"
12"	1	28-5/8"	4-15/16"	29-1/4"	10-1/4"
18"	1	34-3/8"	6-1/2"	34-7/16"	13-1/4"
24"	1	40-3/16"	8-1/16"	39-5/8"	16-1/4"
30"	2	44-1/2"	9-1/4"	43-1/2"	18-1/2"
36"	1	51-3/4"	11-3/16"	50-1/16"	22-1/4"
42	2	56-1/8"	12-3/8"	53-15/16"	24-1/2"
48"*	1	63-3/8"	14-1/4"	60-7/16"	28-1/4"
54"*	2	67-3/4"	15-7/16"	64-3/8"	30-1/2"
60"*	2	73-1/2"	17"	69-1/2"	33-1/2"
66"*	2	79-11/16"	18-1/2"	74-3/4"	36-1/2"
72"*	2	85-1/2"	20-1/16"	79-15/16"	39-1/2"
78"*	3	89-7/16"	21-1/4"	83-13/16"	41-3/4"
84"*	2	96-11/16"	23-3/16"	90-5/16"	45-1/2"
90"*	3	102-3/8"	24-3/8"	94-3/16"	47-1/2"
96"*	2	108-1/4"	26-5/16"	100-11/16"	51-1/2"

Table 5

FLASHING INSTALLATION

1. Continue the SP chimney to the roof. Cut the roof opening, centered over the chimney. A 2 inch-airspace around the chimney is required as it penetrates the roof. The size of hole in the roof will vary depending on the roof pitch.
2. Install the next SP chimney section through the roof. See ***Figure 41***.

***NOTE**: If your roof is already shingled, be sure to slide the upper edge under the shingles to prevent leakage.*

3. Install a bead of caulk around the pipe at the top edge of the flashing. Wrap the storm collar around the pipe and imbed the edge in the caulk to prevent leakage around the pipe.
4. Continue to install pipe sections until the proper termination height is reached. See termination section.

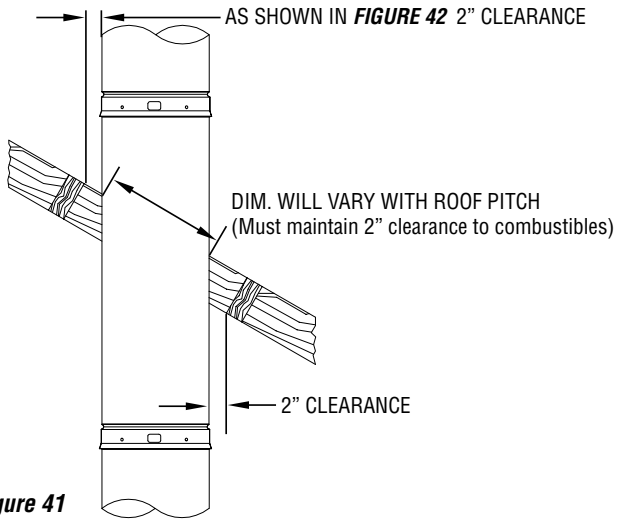

Figure 41

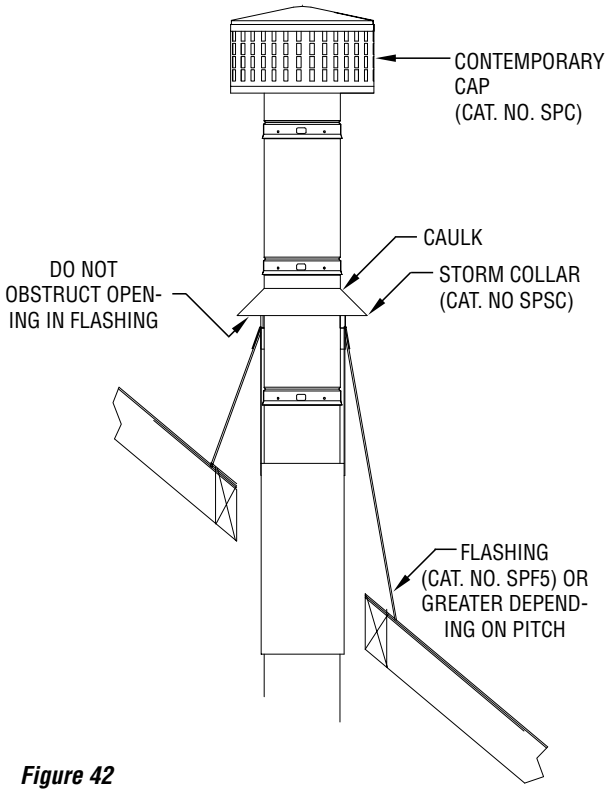

Figure 42

NOTE: DIAGRAMS & ILLUSTRATIONS ARE NOT TO SCALE.

TERMINATION

Many building codes specify a minimum chimney heights above the roof top. These specifications are summarized in what is known as the "Ten Foot Rule". This rule states:

If the horizontal distance from the side of the chimney to the peak of the roof is 10 feet or less, the top of the chimney must be at least 2 feet above the peak of the roof, but never less than 3 feet in overall height above the highest point where it passes through the roof ***(Figure 43)***.

If the horizontal distance from the side of the chimney to the peak of the roof is more than 10 feet, a chimney height reference point is established on the surface of the roof a distance of 10 feet from the side of the chimney in a horizontal plane. The top of the chimney must be at least 2 feet above this reference point, but never less than 3 feet in height above the highest point where it passes through the roof ***(Figure 44)***.

These chimney heights are necessary in the interest of safety and do not ensure smoke free operation. Trees, buildings, adjoining roof lines, adverse wind conditions-etc., may create a need for a taller chimney, should smoking occur.

Additional support is required above the roof if the chimney height exceeds four (4) feet.

Select the proper support for your application-using either a roof brace ***(Figure 45)***, or a support band with guy wires ***(Figure 46)***

SP ROOF BRACE INSTALLATION

1. Assemble the attachment support band (SPSB) around the chimney, and clamp it in place at the desired height using the nut and bolt provided.
2. Loosely attach the support legs to the bolts on the attachment band using hardware provided.
3. Position the support legs as shown in ***Figure 45***. The length of the support legs can be adjusted by loosening the bolt on the leg clamp.
4. Secure legs to roof using screws provided. Seal screw holes to prevent roof leaks.
5. Tighten all hardware.

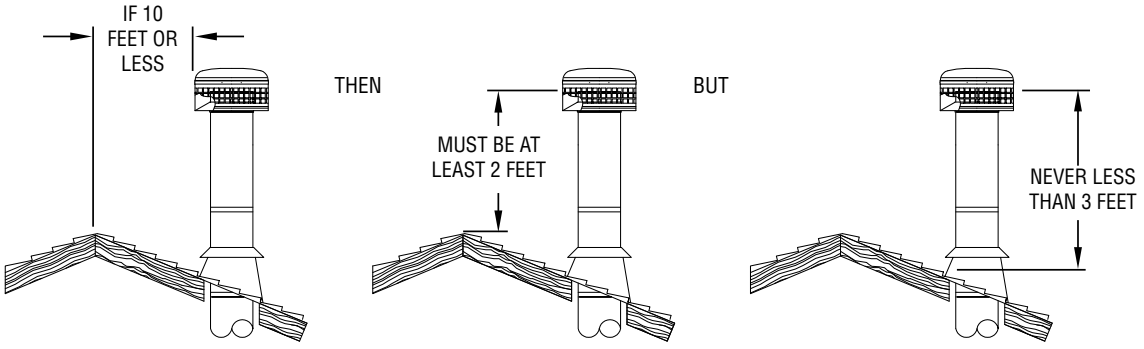

Figure 43

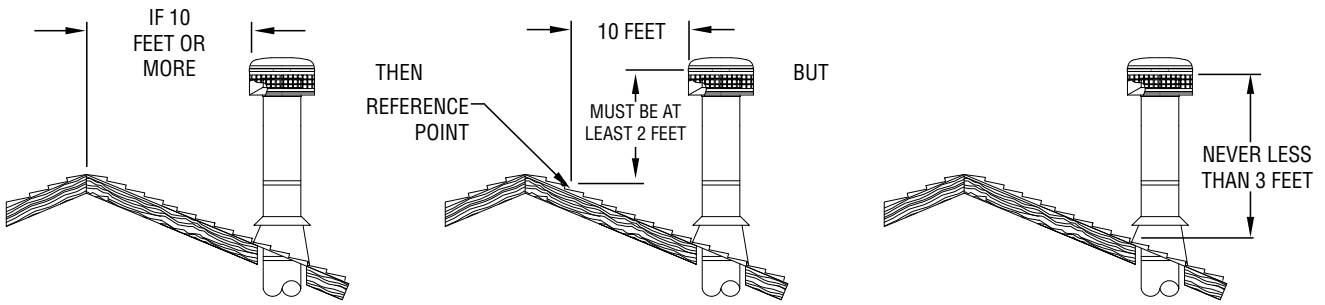

Figure 44

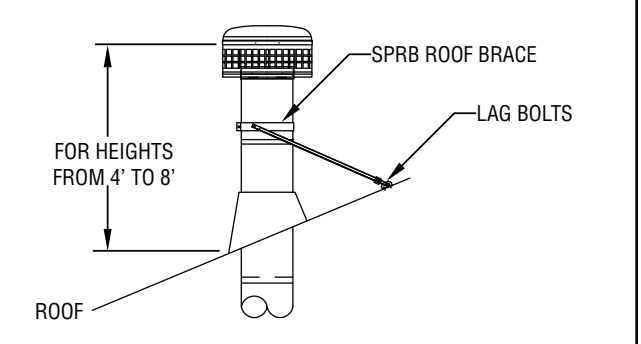

Figure 45

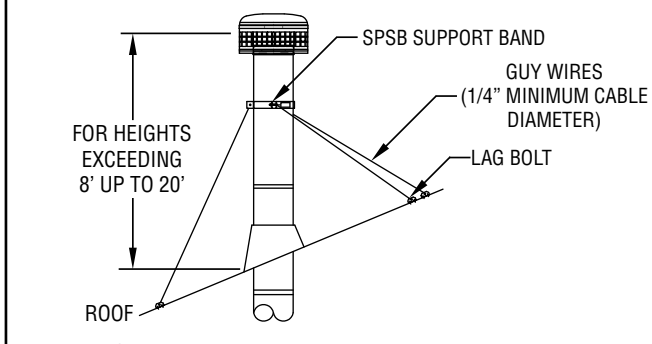

Figure 46

NOTE: DIAGRAMS & ILLUSTRATIONS ARE NOT TO SCALE.

CANADA ONLY CHIMNEY INSTALLATION INSTRUCTIONS USING SECURITY CHIMNEYS ASHT

CANADA APPROVED VENTING SYSTEMS:

6" diameter chimney - Canada

Models ASHT® & S2100 manufacture by Security Chimneys® or DuraTech Canada (DTC) manufactured by DuraVent only, including:

- Chimney lengths
- Elbows *(where necessary)*
- Associated components as per these installation instructions and instructions provided by the venting Manufacturer

Reference the installation instructions provided by venting manufacturer.

CHIMNEY ADAPTOR-CANADA ONLY

The fireplace is normally supplied with a chimney adaptor suitable for use with IHP SnapPak venting. In Canada, the use of Security Chimneys ASHT adaptor is required (Security part number 6IHP1* or 6IHP2**).

* One inch wall

** Two inch wall

Chimney Adaptor* - Canada only

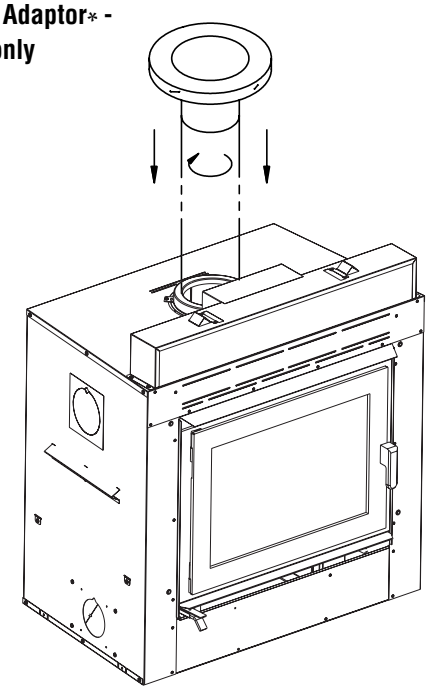

Figure 47

CHIMNEY CHASE AND MULTIPLE TERMINATIONS

For the purpose of this manual, a chimney chase is considered a part of the chimney system rather than part of a building. The termination must be placed a minimum of 18" (460 mm) above the chase.

For installations where more than one chimney is located in the same chase or within the same area, we suggest that their terminations be separated by at least 16" (410 mm) horizontally, and 18" (460 mm) vertically. This separation is to prevent smoke migrating from one chimney to another (see ***Figure 48***).

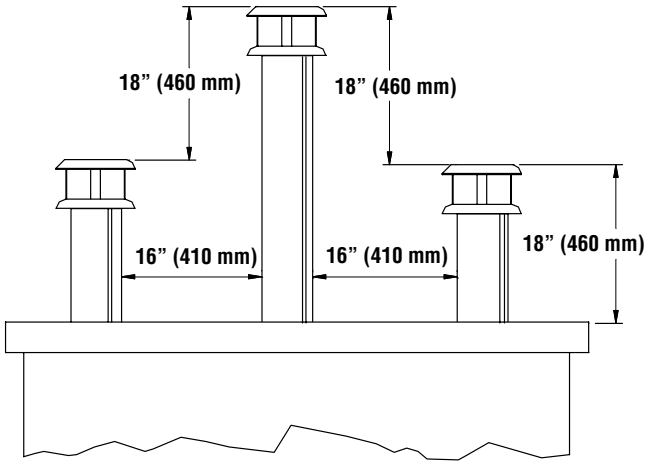

Figure 48

NOTE: DIAGRAMS & ILLUSTRATIONS ARE NOT TO SCALE.

INSTALLATION INSTRUCTIONS FOR MASONRY APPLICATIONS FOR BOTH UNITED STATES AND CANADA

WARNING: Before starting the installation, the masonry chimney must be inspected by a qualified chimney sweep.

The following requirements must be followed:

1. The chimney must be absolutely clear of any soot residue or creosote. Check for cracks, loose or missing bricks that could inhibit correct installation of the liner.
2. The clearance to combustible must be a minimum of 1" between the outside of the masonry and any wood framing or loose insulation.
3. The chimney must be built in accordance with the current building code.
4. No other appliance can be connected to the same chimney.
5. The clearances to combustible for these fireplace connectors are 2" on the side and bottom and 16" at the top.
6. The connector parts are not necessary if the connection between the insulated length and the stainless steel liner is done within the masonry chimney.

Installation:

Rigid stainless liner or stainless flex must be used and listed to UL-1777 for US applications and ULC-S635 for existing masonry or ULC-S640M for new masonry applications in Canada. The steel rigid or flex liner must be rated at 2100º F (1100º C).

Follow these steps:

1. Position the fireplace in its location. Temporarily install the 30° insulated elbow on the top of the fireplace and, using a level, mark with an oval the location where the flue liner will enter the masonry chimney.
2. In the middle of the oval, drill a hole in the masonry chimney at 30º.
3. Increase the size of the hole until a 30º liner elbow can be easily slipped through.
4. Slide the liner down from the top of the masonry chimney until you reach the hole level.
5. Slip through the hole a 30º liner elbow and connect it to the liner.
6. Add a small liner section to the other end of the liner elbow which will allow the liner to extend at least 12" (measured at the top of the liner) from the masonry chimney.
7. Seal the opening around the liner with high temperature refractory cement.
8. The next steps must be done in the following order:

See typical installation illustrated below *(Figure 49)*.

A. Select the insulated pipe length that will fit between the 30° insulated elbow on top of the appliance and the exposed liner so that it will slide at least 2" over the liner section (You may need to cut the liner for a better fit).
B. Take that section and attach the pipe to the insulated liner connector and slide it over the liner. Make sure you have enough opening to be able to install the elbow without difficulty.
C. Install the 30º elbow on the fireplace.
D. Slide the length section back down on the elbow and twist lock the two together.
E. Pull the cover down over the length and install the insulation pad over the liner; be careful to cover the liner completely.
F. Slide back the cover over the insulation and fix it in place using the 3 metal screws supplied.

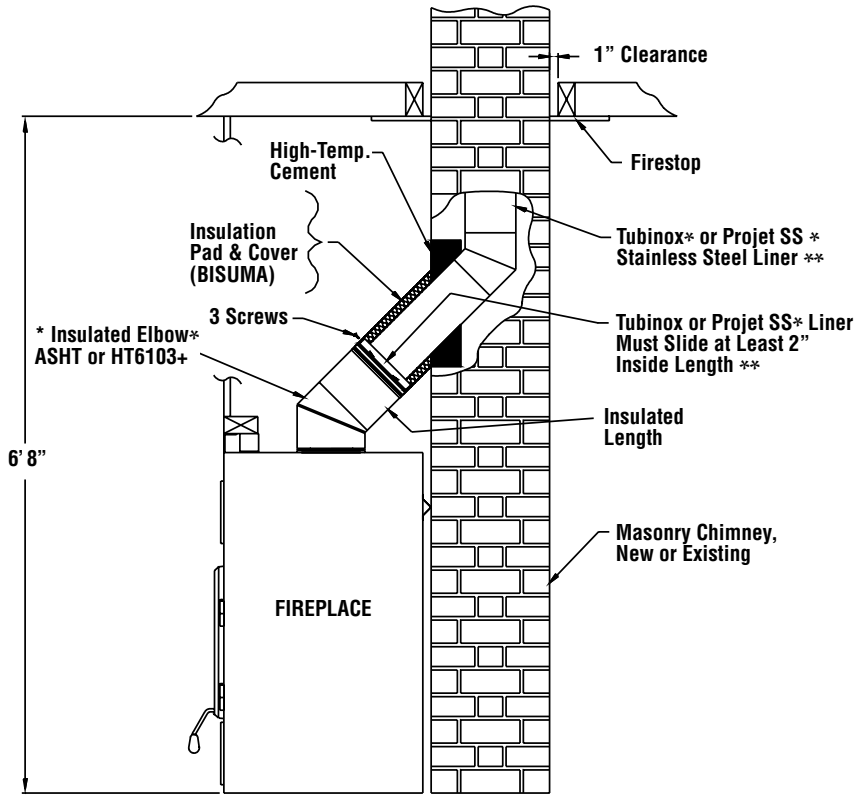

Figure 49

NOTE: DIAGRAMS & ILLUSTRATIONS ARE NOT TO SCALE.

OPTIONAL INSTALLATION ACCESSORIES

Installation Accessories	
Description	**Cat./ Part No.**
Outside Air Kit (Included with Fireplace)	
Outside Air Coupler To Connect Outside Air (UZI) To Fireplace, UZIAD	UZIAD
Outside Air Ducting - includes 4" insulated flex x 10' long, UZI	UZI

Central Forced Air Kit Accessories	
Central Forced Air Kit, Central forced air kit including: blower (BISZY), flex adaptor (BISAF), 2 clamps, variable speed control (VRUW), thermo-disk (VTU), fan to flexible pipe adapter (BISAVF), back draft damper (BISBD), aluminium tape, BISFWK-1	BISFWK-1
Flexible pipe 5" I.D. x 15 ft. Long, 5FLEX15	5FLEX15
Flexible pipe 5" I.D. x 30 ft. Long, 5FLEX25	5FLEX25
Heating and cooling thermostat, 24V, HCTW	HCTW

Cast Surround Kit	
Description	**Cat./ Part No.**
Cast Surround Kit, CSK	H7303
Cast Surround Decorative Keystone, CSK-DK	H7757

(CZ) Add Door Catch Assy (done 2-23-22)

REPLACEMENT PARTS LIST

WRT3920WS Replacement Parts	
Description	**Part/Cat. No.**
Andiron (2 pieces)	PR-SR2897
Bottom refractory	PR-SR2825
Back refractory	PR-SR2826
Left side refractory	PR-SR2828
Right side refractory	PR-SR2827
Front refractory (2 pieces)	PR-SR2829
Secondary air tubes (set of three)	F3540
Fireplace Ashlip	F3551
Fireplace Front Bottom	F3550
Top Front Insulation Protector	F3554
Gasket, Catalyst	F3552
Catalyst Replacement Cartridge	F3543
By-Pass Handle	F3541
Baffle ceramic (set of 2)	F3545
Fireplace left side	F3546
Fireplace right side	F3547
Fireplace top	F3548
Fireplace back	F3549
Top flex protector	PR-SR2877
Door wooden handle	F3618
Door locking mechanism	PR-SR2855
Door hinges	PR-SR1933
Door Catch Assy w/ Hardware	F4828
Ceramic glass	PR-SR2899
Gasket, glass	PR-SR1685H
Gasket, door	PR-SR1823O
Replacement Blower Kit	F3544
Door, complete black	F3619
Touch-up Paint, Aerosol, Black Metallic SBMB6309	H8159
Blower 250 CFM for central forced air kit, BISZY	BISZY
Blower variable speed control with decorative wall plate for (BISZY), VRUW	VRUW
Thermo-disk, on/off blower control (for BISZY), VTU	VTU
Blower to flexible pipe adaptor, BISAVF	BISAVF
Backdraft damper, BISBD	BISBD
Fireplace to Flex adaptor and 2 clamps, BISAF	BISAF
WRT3920WS Metal Fab Collar and Sleeve	F4190

Contact an IHP dealer to obtain any of these parts. Never use substitute materials not approved by IHP. Use of non-approved parts can result in poor performance and safety hazards.

SPECIFICATIONS

Cat. No.	Model	Description
F3557	WRT3920WS	WRT3920WS EPA Wood-Burning Fireplace

Model	Emission Rate	Heat Output	EPA Estimated Efficiency
WRT3920WS	1.8 grams/hr	8,700-25,700 btu/hr	63%

Product Reference Information	
Weight	215 lbs
Height	37-5/8”
Width	32-3/4”
Depth	22-1/2”
Firebox W x H x D - measured in front	19-1/2” x 13-1/4” x 12”
Chimney Weight ASHT* (6” dia)	6.25 lb per linear foot
Chimney Weight AC* (6” dia.)	3.25 lb per linear foot
Chimney weight S-2100+* (6” dia.)	10.8 lb per linear foot

CLEARANCE TO COMBUSTIBLES

The following clearances meet the minimum requirements for a safe installation;

Side wall: 17” (324 mm) measured from the fireplace side

Ceiling: 6’ 8” (2,032 mm) measured from the base of the fireplace

Fireplace enclosure:

Bottom: 0”
Side: 0” to standoff
Back: 0” to standoff
Top: Do not fill the space above the fireplace with any material (Except the wood framing. See ***Page 15, Figure 16***)

Chimney: 2” (50mm)

Mantel: 39” (990mm) measured from the base of the fireplace.

SECURITY CHIMNEYS® AND DURAVENT® - PARTS AND COMPONENTS LISTS

The components listed below must be ordered from Security Chimneys® or DuraVent®. Contact your Security Chimneys or DuraVent Distributor or Dealer for ordering information.

Security Chimneys®
2125 Monterey, Laval, Quebec
Canada, H7L 3T6
securitychimneys.com

450-973-9999
1-800-361-4909 (USA)
1-800-667-3387 (Canada)

M&G DuraVent
877 Cotting Court, Vacaville,
California, 95688
duravent.com

1-800-835-4429

Secure Temp ASHT 1" High Temp. Insulated Stainless Steel Chimney
6" I.D. and 8" O.D., Double-Wall Stainless Steel, Listed to CAN/UCL-S604, UL-103HT and CAN/ULC S629

Description	Part/Cat. No.
Lengths and Misc. Chimney Components	
8" length, 6" Dia.	6L8
12" length, 6" Dia.	6L12
18" length, 6" Dia.	6L18
24" length, 6" Dia.	6L24
36" length, 6" Dia.	6L36
48" length, 6" Dia.	6L48
Adjustable Length 12", 6" Dia.	6LA
15º elbow, 6" Dia.	6E15
30º elbow, 6" Dia.	6E30
Rain Termination Cap, 6" Dia.	6CC
Spark Arrester Screen (universal spark arrester band)	PE
Wall Band	BM
Supports	
Offset Support	SO
Roof Support	ST
Roof Brace	BS2
Firestops	
Firestop	6BF
Radiation Shield	6RS
Insulated Attic Radiation Shield	6RSA2
Insulated Wall Radiation Shield	6RSM
Insulated Wall Radiation Shield, 30º	6RSMI30
Uninsulated Wall Radiation Shield, 30º	6RSM30
Attic Radiation Shield	ACRSA
Roof Flashings	
Flat Roof Flashing	6FR
1/12 - 7/12 (5º - 30º)	6FAR
8/12 - 12/12 (30º - 45º)	6FBR
Storm Collar	6FC
Chimney Adaptors	
Chimney Adaptor, 6" (S2100, HT6000)	6UCA
Chimney Adaptor, 6 to 7" (ASHT, HT6103)	6AW7

DuraTech DTC 1" High Temp. Insulated Stainless Steel Chimney
6" I.D. and 8" O.D., Double-Wall Stainless Steel, Listed to CAN/UCL-S604, UL-103HT and CAN/ULC S629

Description	Part/Cat. No.
Lengths and Misc. Chimney Components	
8" length, 6" Dia.	6DTC-08SS
12" length, 6" Dia.	6DTC-12SS
18" length, 6" Dia.	6DTC-18SS
24" length, 6" Dia.	6DTC-24SS
36" length, 6" Dia.	6DTC-36SS
48" length, 6" Dia.	6DTC-48SS
Adjustable Length 12", 6" Dia.	6DTC-12TASS
15º elbow, 6" Dia.	6DTC-E15SS
30º elbow, 6" Dia.	6DTC-E30SS
Rain Termination Cap, 6" Dia.	6DTC-VC
Spark Arrester Screen (universal spark arrester band)	DTC-SA
Wall Band	DTC-WSU
Supports	
Offset Support	DTC-RESU
Roof Support	DTC-RS
Roof Brace	DTC-XRB
Firestops	
Firestop	6DTC-FS
Radiation Shield	6DTC-FRS
Insulated Attic Radiation Shield	6DTC-ISI
Insulated Wall Radiation Shield	6DTC-WTI
Insulated Wall Radiation Shield, 30º	6DTC-WRSI30
Uninsulated Wall Radiation Shield, 30º	6DTC-WRSI45
Attic Radiation Shield	6DTC-ISIA
Roof Flashings	
Flat Roof Flashing	6DTC-FF
1/12 - 7/12 (5º - 30º)	6DTC-F7
8/12 - 12/12 (30º - 45º)	6DTC-F12
Storm Collar	6DTC-SC

PFS C US

Report No. / Rapport nº
14-181

LISTED FACTORY BUILT FIREPLACE
FOYER PRÉFABRIQUE HOMOLOGUÉ

Superior FIREPLACES®

Manufactured by / Fabriqué par:
INNOVATIVE HEARTH PRODUCTS
1502 14th St. NW
Auburn, WA 98001 USA

Serial No.
Numéro de série

Conforms to / Conforme au : UL STD 127
Certified to / Certifié au : ULC STD S610

Model / Modèle: WRT3920WS

Certification test emission value 1.8 g/hr per 2020 standard
Valeur d'émission du test d'homologation 1,8 g/h selon la norme 2020

CLEARANCES TO COMBUSTIBLES:

SIDE WALL (FROM DOOR EDGE)	24 in. (610 mm)
MANTEL (ABOVE FIREPLACE'S BASE)	39 in. (990 mm)
BACK WALL (FROM SPACERS)	0 in. (0 mm)
ABOVE THE FIREPLACE (FROM THE BASE OF THE FIREPLACE)	6 ft. 8 in. (2032 mm)
CHIMNEY	2 in. (51 mm)

DÉGAGEMENTS AUX COMBUSTIBLES:

MUR LATÉRAL (DE L'OUVERTURE DE LA PORTE)	24 po. (610 mm)
LINTEAU (AU-DESSUS DE LA BASE DU FOYER)	39 po. (990 mm)
MUR ARRIÈRE ET CÔTÉ DU FOYER (DES ESPACEURS)	0 po. (0 mm)
AU-DESSUS DU FOYER (À PARTIR DE LA BASE DU FOYER)	6 pi. 8 po. (2032 mm)
CHEMINÉE	2 po. (51 mm)

INSTALL WITH MINIMUM CLEARANCES TO WALL AS SHOWN IN INCHES.

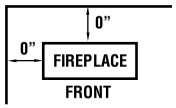

SIDEWALL - BACKWALL INSTALLATION

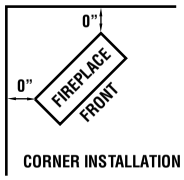

CORNER INSTALLATION

FLOOR PROTECTOR MINIMUM DISTANCE FROM OPENING IN INCHES

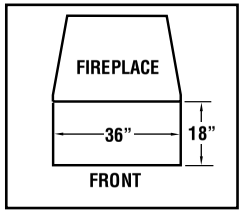

HEARTH EXTENSION MATERIAL :
- 3/8 " THICKNESS NON COMBUSTIBLE MATERIAL
- OR EQUIVALENT

U.S. ENVIRONMENTAL PROTECTION AGENCY
Certified to comply with 2020 particulate emission standards using crib wood.

DATE OF MFG. 1 2 3 4 5 6 7 8 9 10 11 12
2022-23-24-25-26-27-28

P/N 900842-01, REV. 0, 02/2018

- USE WOOD FUEL ONLY
- NON COMBUSTIBLE HEARTH EXTENSION MUST BE INSTALLED AT FRONT OF UNIT EXTENDING 18 in. (457 mm) AT FRONT AND 36 in. (914 mm) WIDE MINIMUM.
- THIS FIREPLACE HAS NOT BEEN TESTED WITH UNVENTED GAS LOG SET. TO REDUCE RISK OF FIRE OR INJURY DO NOT INSTALL AN UNVENTED GAS LOG SET INTO THE FIREPLACE.
- ELECTRICAL RATING: 120 V, 60 Hz
- CHIMNEY TYPE: USE ONLY WITH LISTED 6 in. DIAMETER CHIMNEY, CERTIFIED MODEL ASHT+, S-2100+, HT6000+, HT6103+, AC OR 7 in. ASHT, HT6103.
- CAN BE CONNECTED TO A MASONRY CHIMNEY AS DESCRIBED IN THE INSTALLATION INSTRUCTIONS.
- COMPONENTS USED WITH THE FIREPLACE MUST BE LISTED. SEE LIST IN THE INSTALLATION INSTRUCTIONS.
- REPLACE GLASS WITH CERAMIC GLASS 5 mm THICK.
- FOR SAFE OPERATION INSTALL IN ACCORDANCE WITH THE MANUFACTURER'S INSTRUCTIONS.
- CAUTION: COMBUSTION AIR OPENING MUST NOT BE OBSTRUCTED.
- DO NOT OVERFIRE THE FIREPLACE.
- OPERATE THE FIREPLACE WITH DOOR FULLY OPEN OR FULLY CLOSED ONLY.
- DO NOT USE A FIREPLACE INSERT OR OTHER PRODUCTS NOT SPECIFIED FOR USE WITH THIS PRODUCT
- POUR USAGE AVEC LE BOIS SEULEMENT
- UN TABLIER NON COMBUSTIBLE DOIT ÊTRE INSTALLÉ À L'AVANT DU FOYER . DIMENSION MINIMALE DE 18 po. (457 mm) PAR 36 po. (914 mm) DE LARGE.
- CE FOYER N'EST PAS HOMOLOGUÉ POUR ÊTRE UTILISÉ AVEC UN ENSEMBLE DE BÛCHES À GAZ SANS CONDUIT D'ÉVACUATION. AFIN DE RÉDUIRE LES RISQUES D'INCENDIE OU DE BLESSURES, N'INSTALLEZ PAS DE BÛCHES À GAZ SANS CONDUIT D'ÉVACUATION À L'INTÉRIEUR DE CE FOYER.
- ALIMENTATION ÉLECTRIQUE: 120V, 60 Hz
- UTILISER SEULEMENT AVEC UNE CHEMINÉE 6 po. (150 mm) DE DIAMÈTRE, MODÈLE ASHT+, S2100+, HT6000+, HT6103+ OU AC HOMOLOGUÉE OU 7 po. (175mm) ASHT, HT6103.
- PEUT ÊTRE RACCORDÉ SUR UNE CHEMINÉE DE MAÇONNERIE TEL QUE DÉCRIT DANS LE MANUEL D'INSTALLATION.
- LES COMPOSANTES UTILISÉES AVEC LE FOYER DOIVENT ÊTRE HOMOLOGUÉES. VOIR LA LISTE DANS LE MANUEL D'INSTALLATION.
- REMPLACER LA VITRE AVEC UN VERRE CÉRAMIQUE DE 5mm D'ÉPAISSEUR.
- POUR UNE UTILISATION SÉCURITAIRE, INSTALLER CONFORMÉMENT AUX DIRECTIVES DU FABRICANT.
- ATTENTION: NE PAS OBSTRUER LES ARRIVÉES D'AIR COMBURANT.
- NE PAS FAIRE SURCHAUFFER LE FOYER.
- LA PORTE DU FOYER DOIT DEMEURER TOTALEMENT OUVERTE OU TOTALEMENT FERMÉE LORSQUE LE FOYER FONCTIONNE.
- NE PAS UTILISER DE POÊLE ENCASTRABLE OU D'AUTRES PRODUITS NON SPÉCIFIÉS COMME ÉTANT UTILISABLES AVEC CE PRODUIT.
- CONTACT YOUR LOCAL BUILDING OR FIRE OFFICIALS ABOUT RESTRICTIONS AND INSTALLATION INSPECTIONS IN YOUR AREA.
- CONTACTEZ LES RESPONSABLES DE VOTRE REGION A PROPOS DES RESTRICTIONS ET INSPECTIONS D'INSTALLATION.
- SEE IHP INSTALLATION AND OPERATING INSTRUCTIONS FOR THIS MODEL.
- INSTALL AND USE ONLY IN ACCORDANCE WITH THE MANUFACTURER'S INSTRUCTIONS AND LOCAL BUILDING CODES.
- SPECIAL METHODS ARE REQUIRED WHEN PASSING THROUGH A WALL OR CEILING. SEE INSTRUCTIONS AND BUILDING CODES.
- PREVENT CREOSOTE FIRE: INSPECT CHIMNEY CONNECTOR AND CHIMNEY FLUE MONTHLY AND CLEAN IF NECESSARY.
- DO NOT OVERFIRE. IF DOME OR CHIMNEY CONNECTOR GLOWS YOU ARE OVERFIRING.
- KEEP FURNISHINGS AND OTHER COMBUSTIBLE MATERIALS A CONSIDERABLE DISTANCE AWAY FROM APPLIANCE.
- MAINTENIR LES MEUBLES ET AUTRES OBJETS À UNE DISTANCE SÉCURITAIRE DU FOYER.
- THIS WOOD HEATER NEEDS PERIODIC INSPECTION AND REPAIR FOR PROPER OPERATION. CONSULT THE OWNER'S MANUAL FOR FURTHER INFORMATION. IT IS AGAINST FEDERAL REGULATIONS TO OPERATE THIS WOOD HEATER IN A MANNER INCONSISTENT WITH THE OPERATING INSTRUCTIONS IN THE OWNER'S MANUAL.
- CET APPAREIL DE CHAUFFAGE AU BOIS DOIT ÊTRE INSPECTE ET ENTRETENU PÉRIODIQUEMENT POUR FONCTIONNER CORRECTEMENT. VOIR LE MANUEL DU PROPRIÉTAIRE POUR PLUS D'INFORMATION. L'UTILISATION DE CET APPAREIL DE CHAUFFAGE AU BOIS DE MANIÈRE INCOMPATIBLE AVEC LES INSTRUCTIONS DU MANUEL DU PROPRIÉTAIRE CONSTITUE UNE INFRACTION AUX RÉGULATIONS FÉDÉRALES.

NOTES

Limited Three Year Warranty - Innovative Hearth Products Combustor

THE WARRANTY

Innovative Hearth Products Limited Three Year Warranty ("IHP") warrants your Catalyst ("Product") to be free from defects in materials and workmanship at the time of manufacture. After installation, if the Product is found to be defective in materials or workmanship during the Limited Three Year Warranty period and while the Product remains at the site of the original installation, IHP will, at its option, repair or replace the covered component. If repair or replacement is not commercially practical, IHP will, at its option, refund the purchase price or wholesale price of the IHP product, whichever is applicable. IHP will also pay IHP prevailing labor rates, as determined in its sole discretion, incurred in repairing or replacing such components. THERE ARE EXCLUSIONS AND LIMITATIONS to this Limited Three Year Warranty as described herein.

COVERAGE COMMENCEMENT DATE

Warranty coverage begins on the date of purchase. In the case of new home construction, warranty coverage begins on the date of first occupancy of the dwelling or six months after the sale of the Product by an independent IHP dealer, whichever occurs earlier. The warranty shall commence no later than 24 months following the date of product shipment from IHP, regardless of the installation or occupancy date.

EXCLUSIONS AND LIMITATIONS

This Limited Three Year Warranty applies only if the Product is installed in the United States or Canada and only if operated and maintained in accordance with the printed instructions accompanying the Product and in compliance with all applicable installation and building codes and good trade practices.
This warranty is non-transferable and extends to the original owner only. The Product must be purchased through a listed supplier of IHP and proof of purchase must be provided.

Labor coverage – Prevailing IHP labor rates apply for the warranty period of the Product.

Whenever practicable, IHP will provide replacement parts, if available, for a period of 10 years from the last date of manufacture of the product.

IHP will not be responsible for:

(a) damages caused by normal wear and tear, accident, riot, fire, flood or acts of God;
(b) damages caused by abuse, negligence, misuse, or unauthorized alteration or repair of the Product affecting its stability or performance. (The Product must be subject to normal use with approved fuels listed in the Operation Manual provided with the product. Fuel products with abnormal burning characteristics, including but not limited to fuel such as driftwood, coal or plywood and wood products using a binder may burn at excessive temperatures and may cause damage to the Product or may cause it to function improperly; IHP stoves, inserts and high efficiency EPA fireplaces are approved for burning dry seasoned wood only);
(c) damages caused by failing to provide proper maintenance and service in accordance with the instructions provided with the Product;
(d) damages, repairs or inefficiency resulting from faulty installation or application of the Product.

IHP is not responsible for inadequate system draft caused by air conditioning and heating systems, mechanical ventilation systems, or general construction conditions which may generate negative air pressure in the room in which the appliance is installed. Additionally IHP assumes no responsibility for smoking conditions caused by inadequate chimney height, adjoining trees or buildings, adverse wind conditions or unusual environmental factors and conditions. Certain IHP Products are listed for use with Security Chimneys International, Ltd. chimney systems only. Use of chimney components other than that specified in the Product manual will void the Product warranty.

LIMITATION ON LIABILITY

It is expressly agreed and understood that IHP's sole obligation and the purchaser's exclusive remedy under this warranty, under any other warranty, expressed or implied, or in contract, tort or otherwise, shall be limited to replacement, repair, or refund, as specified herein.

In no event shall IHP be liable for any incidental or consequential damages caused by defects in the Product, whether such damage occurs or is discovered before or after replacement or repair, and whether such damage is caused by IHP's negligence. IHP has not made and does not make any representation or warranty of fitness for a particular use or purpose, and there is no implied condition of fitness for a particular use or purpose.

IHP makes no expressed warranties except as stated in this Limited Three Year Warranty. The duration of any implied warranty is limited to the duration of this expressed warranty.

No one is authorized to change this Limited Three Year Warranty or to create for IHP any other obligation or liability in connection with the Product. Some states and provinces do not allow the exclusion or limitation of incidental or consequential damages, so the above limitations or exclusions may not apply to you. The provisions of this Limited Three Year Warranty are in addition to and not a modification of or subtraction from any statutory warranties and other rights and remedies provided by law.

INVESTIGATION OF CLAIMS AGAINST WARRANTY

IHP reserves the right to investigate any and all claims against this Limited Three Year Warranty and to decide, in its sole discretion, upon the method of settlement.

To receive the benefits and advantages described in this Limited Three Year Warranty, the appliance must be installed and repaired by a licensed contractor approved by IHP.

Contact IHP at the address provided herein to obtain a listing of approved dealers/distributors. **IHP shall in no event be responsible for any warranty work done by a contractor that is not approved without first obtaining IHP's prior written consent.**

HOW TO REGISTER A CLAIM AGAINST WARRANTY

In order for any claim under this warranty to be valid, you must contact the IHP dealer/distributor from which you purchased the product. If you cannot locate the dealer/distributor, then you must notify IHP in writing. IHP must be notified of the claimed defect in writing within 90 days of the date of failure. Notices should be directed to the IHP Warranty Department at 1769 East Lawrence Street; Russellville, AL 35654 or visit our website at WWW.IHP.US.COM.

Printed in U.S.A. © 2018 Innovative Hearth Products
P/N 900943-00, Rev. NC, 10/2018
Innovative Hearth Products
1769 East Lawrence Street • Russellville, AL 35654

Innovative Hearth Products
Superior® Brand Wood-Burning Fireplace
20 Year Limited Warranty

THE WARRANTY

Innovative Hearth Products ("IHP") 20 Year Limited Warranty warrants your Superior® Brand wood burning fireplace ("Product") to be free from defects in materials and workmanship at the time of manufacture. The Product body, firebox and ceramic glass carry the 20 Year Limited Warranty. Ceramic glass carries the 20 Year Limited Warranty against thermal breakage only. After installation, if covered components manufactured by IHP are found to be defective in materials or workmanship during the 20 Year Limited Warranty period and while the Product remains at the site of the original installation, IHP will, at its option, repair or replace the covered components. If repair or replacement is not commercially practical, IHP will, at its option, refund the purchase price or wholesale price of the IHP product, whichever is applicable. IHP will also pay IHP prevailing labor rates, as determined in its sole discretion, incurred in repairing or replacing such components for up to five years. THERE ARE EXCLUSIONS AND LIMITATIONS to this 20 Year Limited Warranty as described herein.

COVERAGE COMMENCEMENT DATE

Warranty coverage begins on the date of purchase. In the case of new home construction, warranty coverage begins on the date of first occupancy of the dwelling or six months after the sale of the Product by an independent IHP dealer/distributor, whichever occurs earlier. The warranty shall commence no later than 24 months following the date of product shipment from IHP, regardless of the installation or occupancy date.

EXCLUSIONS AND LIMITATIONS

This 20 Year Limited Warranty applies only if the Product is installed in the United States or Canada and only if operated and maintained in accordance with the printed instructions accompanying the Product and in compliance with all applicable installation and building codes and good trade practices.

This warranty is non-transferable and extends to the original owner only. The Product must be purchased through a listed supplier of IHP and proof of purchase must be provided. The Product body and firebox carry the 20 Year Limited Warranty from the date of installation. Vent components, trim components, paint and applied stains are excluded from this 20 Year Limited Warranty. The following do not carry a 20 Year Limited Warranty but are warranted as follows:

Air tubes, baffles and brick retainers – Repair or replacement for one year from the date of installation
Cast iron parts – Replacement for one year from date of installation
Catalyst – Carries a separate warranty. Refer to the warranty certificate provided for that part
Electrical components – Repair or replacement for one year from the date of installation
Fireplace screens, refractory and side shields (metal or refractory) – Repair or replacement for two years from date of installation. Excludes hairline cracks.
Fuel grates –These parts are considered consumable accessories and therefore are not warranted, with the exception of defects in material or workmanship which are covered for 90 days from the date of installation
Gaskets – Replacement for one year from date of installation
Gold & nickel plating – Replacement for two years from date of installation. Excludes tarnishing
Optional glass doors – Repair or replacement for 90 days from the date of installation
Refractory & screens – Replacement for two years from date of installation. Excludes hairline cracks
Removable air tubes – Repair or replacement for seven years from date of installation. IHP prevailing labor rates for years one through five.
Labor coverage – Prevailing IHP labor rates apply for the warranty period of the component.

Parts not otherwise listed carry a 90 day warranty from the date of installation.

Whenever practicable, IHP will provide replacement parts, if available, for a period of 10 years from the last date of manufacture of the Product.

IHP will not be responsible for: (a) damages caused by normal wear and tear, accident, riot, fire, flood or acts of God; (b) damages caused by abuse, negligence, misuse, or unauthorized alteration or repair of the Product affecting its stability or performance. (The Product must be subject to normal use with approved fuels listed in the Operation Manual provided with the product. This includes burning such fireplace fuels as wood and natural or propane gas. Fuel products with abnormal burning characteristics, including but not limited to fuel such as driftwood, coal or plywood and wood products using a binder may burn at excessive temperatures and may cause damage to the Product or may cause it to function improperly.); (c) damages caused by failing to provide proper maintenance and service in accordance with the instructions provided with the Product; (d) damages, repairs or inefficiency resulting from faulty installation or application of the Product.

Coverage of this 20 Year Limited Warranty is conditional upon use of an adequate fuel grate on factory-built fireplaces only, when applicable.
IHP is not responsible for inadequate fireplace system draft caused by air conditioning and heating systems, mechanical ventilation systems, or general construction conditions which may generate negative air pressure in the room in which the appliance is installed. Additionally IHP assumes no responsibility for smoking conditions caused by inadequate chimney height, adjoining trees or buildings, adverse wind conditions or unusual environmental factors and conditions. Certain IHP Products are listed for use with Security Chimneys International, Ltd. or IHP chimney systems only. Use of chimney components other than that specified in the Product manual will void the Product warranty.

This 20 Year Limited Warranty covers only parts and labor as provided herein. In no case shall IHP be responsible for materials, components or construction which are not manufactured or supplied by IHP or for the labor necessary to install, repair or remove such materials, components or construction. Additional utility bills incurred due to any malfunction or defect in equipment are not covered by this 20 Year Limited Warranty. All replacement or repair components will be shipped F.O.B. from the nearest stocking IHP factory.

LIMITATION ON LIABILITY

It is expressly agreed and understood that IHP's sole obligation and the purchaser's exclusive remedy under this warranty, under any other warranty, expressed or implied, or in contract, tort or otherwise, shall be limited to replacement, repair, or refund, as specified herein.

In no event shall IHP be liable for any incidental or consequential damages caused by defects in the Product, whether such damage occurs or is discovered before or after replacement or repair, and whether such damage is caused by IHP's negligence. IHP has not made and does not make any representation or warranty of fitness for a particular use or purpose, and there is no implied condition of fitness for a particular use or purpose.

IHP makes no expressed warranties except as stated in this 20 Year Limited Warranty. The duration of any implied warranty is limited to the duration of this expressed warranty.

No one is authorized to change this 20 Year Limited Warranty or to create for IHP any other obligation or liability in connection with the Product. Some states and provinces do not allow the exclusion or limitation of incidental or consequential damages, so the above limitations or exclusions may not apply to you. The provisions of this 20 Year Limited Warranty are in addition to and not a modification of or subtraction from any statutory warranties and other rights and remedies provided by law.

INVESTIGATION OF CLAIMS AGAINST WARRANTY

IHP reserves the right to investigate any and all claims against this 20 Year Limited Warranty and to decide, in its sole discretion, upon the method of settlement.

To receive the benefits and advantages described in this 20 Year Limited Warranty, the appliance must be installed and repaired by a licensed contractor approved by IHP.

Contact IHP at the address provided herein to obtain a listing of approved dealers/distributors. **IHP shall in no event be responsible for any warranty work done by a contractor that is not approved without first obtaining IHP's prior written consent.**

HOW TO REGISTER A CLAIM AGAINST WARRANTY

In order for any claim under this warranty to be valid, you must contact the IHP dealer/distributor from which you purchased the product. If you cannot locate the dealer/distributor, then you must notify IHP in writing. IHP must be notified of the claimed defect in writing within 90 days of the date of failure. Notices should be directed to the IHP Warranty Department at 1769 East Lawrence Street; Russellville, AL 35654 or visit our website at WWW.SUPERIORFIREPLACES.US.COM.

Printed in U.S.A. © 2013 Innovative Hearth Products
P/N 900224-00, Rev. B 02/2018

Innovative Hearth Products
1769 East Lawrence Street • Russellville, AL 35654

WARRANTY

Your fireplace is covered by a limited warranty. Please read the warranty to be familiar with its coverage.

Retain this manual. File it with your other documents for future reference.

PRODUCT REFERENCE INFORMATION

We recommend that you record the following important information about your fireplace. Please contact your IHP dealer for any questions or concerns.

REPLACEMENT PARTS

See ***Page 28*** for a complete replacement parts list. Use only parts supplied from the manufacturer.

Normally, all parts should be ordered through your IHP distributor or dealer. Parts will be shipped at prevailing prices at time of order.

When ordering repair parts, always give the following information:

1. The model number of the appliance.
2. The serial number of the appliance.
3. The part number.
4. The description of the part.
5. The quantity required.
6. The installation date of the appliance.

If you encounter any problems or have any questions concerning the installation or application of this system, please contact your dealer.

IHP
1769 East Lawrence Street
Russellville, AL 35654
Visit us at SuperiorFireplaces.us.com

Model Number _____

Serial Number _____

Date Installed _____

Dealer's Name _____

Dealer's Phone Number _____

NATIONAL FIREPLACE INSTITUTE NFI CERTIFIED www.nficertified.org

We recommend that our woodburning hearth products be installed and serviced by professionals who are certified in the U.S. by the National Fireplace Institute® (NFI) as NFI Woodburning Specialists or who are certified in Canada by Wood Energy Technical Training (WETT).

Wood Energy Technical Training www.wettinc.ca

Innovative Hearth Products (IHP) reserves the right to make changes at any time, without notice, in design, materials, specifications, prices and also to discontinue colors, styles and products. Consult your local distributor for fireplace code information.

INNOVATIVE HEARTH PRODUCTS

Printed in U.S.A. © 2019 Innovative Hearth Products

P901001-00