TEST REPORT

TEST OF A NON-CATALYTIC WOOD HEATER FOR EMISSIONS AND EFFICIENCY

PER EPA METHODS ALT-125, ASTM E2515, ASTM E3053 and CSA B415.1,

Client:

Innovative Hearth Products

1502 14th Street NW

Auburn WA 98001

USA

Model Name: S160AGL, S160TGL, C160AGL, C160TGL, T160GL and WXS2016

Attention: Rafael Sanchez

TESTED BY:

Services Polytests inc.

695-B Gaudette

St-jean-sur-Richelieu, QC, J3B 7S7

TEST DATES: May 23rd to May 29th 2018

REPORT DATE: June 20th 2018

Project number: PI-20165

All services undertaken are subject to the following general policy: Reports are submitted for exclusive use of the clients to whom they are addressed. Their significance is subject to the adequacy and representative character of the samples and to the comprehensiveness of the tests, examinations or surveys made. This document may not be reproduced except in its entirety without the written permission from Services Polytests Services Polytests have not been involved in any R&D design consulting regarding this unit as requested by the NSPS..

Tested:
Maxime Martin

written by:
Danick Power, P. Eng

Verified by third party certifier (PFS):

SUMMARY

1 Introduction 3
1.1 General 3
1.2 Test unit information 3
1.3 Results 4
1.4 Pretest information 4
2 Summary of test results 4
2.1 Model identification 4
2.2 Laboratory information 4
2.3 Test condition Summary 5
2.4 Test run results summary 6
2.5 Weighted average summary 7
2.6 Weighted average Final results 7
2.7 Test facility conditions 7
2.8 Dilution tunnel flow rate measurements and sampling data (ASTM E2515) 8
2.9 Dilution tunnel dual train precision 8
3 Process description 9
3.1 Discussion 9
3.2 Unit dimensions 9
3.3 Air supply system 10
3.4 operation during test 11
3.5 Start-up operation 12
3.6 Sampling locations 12
3.7 Drawings 12
3.8 Emissions efficiency testing equipment list 12
4 Sampling methods 12
4.1 Particulate sampling 12
5 Quality assurance 12
5.1 Instrument calibration 12
5.1.1 Gas meters 12
5.1.2 SCALES 12
5.1.3 Gas analyzers 12
5.2 Test method procedures 13
5.2.1 Leak check procedures 13

5.2.2 Tunnel velocity flow measurement 13

5.2.3 Pm sampling proportionality (ASTM E2515) 13

List of appendix

APPENDIX 1: Raw data, forms and results

APPENDIX 2: Proportionality results

APPENDIX 3: Calibration data

APPENDIX 4: Unit pre-burn

APPENDIX 5: Participants

APPENDIX 6: Drawings and specifications

APPENDIX 7: Manual & Label

APPENDIX 8: Photographs of test set up

APPENDIX 9: Test load photographs

APPENDIX 10: Laboratory Operating Procedures

APPENDIX 11: Sample calculations

APPENDIX 12: Volume calculations

APPENDIX 13: Operating instruction

APPENDIX 14: Drawing Air flow pattern

APPENDIX 15: Application for wood stove program

1 INTRODUCTION

1.1 GENERAL

Laboratory

- Location: Services Polytests Inc., 695-B Gaudette St-jean-sur-Richelieu QC, Canada J3B 7S7
- Elevation: 100 feet above sea level

Test program

- Purpose: unit qualification NSPS 2020 cord wood
- Test dates: May 23rd to 29th 2018
- Test methods used:
    - Particulate emissions: ASTM E3053-17 ; ASTM E2515-11 methods ALT-125 as referred into 40 CFR Part 60 Subpart AAA
    - Efficiency: CSA B415.1-10

1.2 TEST UNIT INFORMATION

General

- Manufacturer: Innovative Hearth products
- Product type: wood heater
- Combustion system: non-catalytic
- Unit tested: S160AGL, S160TGL, C160AGL, C160TGL, T160GL and WXS2016

Particularities

- 'S' prefix indicates a stove variant
- 'C' prefix indicates a converter (insert) variant
- 'T' prefix refers to the brand name Tahoma
- 'W' prefix refers to wood
- 'X' prefix refers to an internal nomenclature, open faced
- 20 refers to an internal brand series, in this case Merit-1
- 16 refers to the box size 1.6 ft^3
- 'A' suffix indicates an arched door
- 'T' suffix indicates a traditional door
- 'GL' suffix indicates Green Line series, to differentiate from pre-2020 models of similar nomenclatures

In Summary:

All six models are built from the same firebox configuration. All primary and secondary airflows are exactly the same at that point where they enter the unit. The viewing area is the same for both door configurations. Optional stove pedestal/leg accessories are provided as are optional blowers.

1.3 RESULTS

Emission results obtained

- Weighted Average Emissions Rate: 2.1 g/hr
- Weighted Average Overall Efficiency: 70.0 %

Conformity: NSPS Phase 2020

1.4 PRETEST INFORMATION

Unit condition: The unit was received by carrier in April 2018 in good condition. The 50hrs of aging was made by Polytests Services.

Set up

- Venting system type: diameter 6-inch steel pipe and insulated chimney
- System height from floor: 15 feet
- Particularities: Optional convection fan can be provided with the heater

2 SUMMARY OF TEST RESULTS

2.1 MODEL IDENTIFICATION

Model name number	S160AGL
Manufacturer	**Innovative Hearth Products**
address	1502 14th Street NW Auburn WA 98001 USA
appliance category	Wood heater
Usable Firebox Volume - ft3	1,51
Catalytic/Non-Cat	Non-Cat
convection air fan (no, standard, Optional)	optional

2.2 LABORATORY INFORMATION

Testing laboratory	Polytests Services inc.
address	695-B Gaudette, St-jean-sur-richelieu, J3B 7S7 Qc, Canada
ISO/ Accreditation info	17025
Dates tested	May 7, 2018
Test Methods / Standard	ALT-125
Dilution Tunnel Inside diameter - in	8
Filter diameter	47 mm
Filter material	PTFE Pall

2.3 TEST CONDITION SUMMARY

Model Name(s) / number(s)	IRON STRIKE					
Usable firebox Volume-ft3	1,51					
Convection Air Fan (No, Standard, Optional)	optional					
Test runs #	1.1	1.2	2	3	4	5
Date tested	May 23rd 2018	May 23rd 2018	May 24th 2018	May 25th 2018	May 28th 2018	May 29th 2018
test run category (L,M,H)	H	M	M	L	M	M
average barometric pressure – in Hg	29,80	29,80	29,91	29,60	29,75	29,85
Max observe Ambient temp. °F	80,81	81,76	83,01	82,30	82,04	82,52
Min observe Ambient Temp °F	76,42	79,61	80,25	79,90	78,85	79,73
Max observe Filter temp °F	89,60	89,35	88,24	89,29	89,13	88,91
Run air settings						
Primary (measured up from minimum)	full open	full closed	full closed	full closed	medium setting	medium setting
Secondary (measured up from minimum)	fix	fix	fix	fix	fix	fix
Convection air setting	on	on	on	on	on	on
Test fuel load						
Cordwood fuel species	Oak	Oak	Oak	Oak	Oak	Oak
specific Gravity (from Table 1)	0,66	0,66	0,66	0,66	0,66	0,66
Higher heating value - Btu/lb (from Annex A1)	8690	8690	8690	8690	8690	8690
Nom. Test fuel piece length - in	16	16	16	16	16	16
Number of test fuel pieces	4	5	5	5	5	5
Test fuel Weight						
Kindling - as fired lb.	2,87	NA	NA	NA	NA	NA
Kindling Wt. - as % of test fuel load	18,5%	NA	NA	NA	NA	NA
Kindling Moisture % Db	9,1	NA	NA	NA	NA	NA
Kindling Kg DB	1,19	NA	NA	NA	NA	NA
SU Fuel Wt- as fired lb	4,36	NA	NA	NA	NA	NA
SU Fuel wt. - as % of test fuel load	28,1%	NA	NA	NA	NA	NA
SU Fuel moisture - % DB	20,0	NA	NA	NA	NA	NA
SU fuel- Kg DB	1,65	NA	NA	NA	NA	NA
Test Fuel Load - As Fired lb	15,53	18,70	17,23	17,24	17,69	18,17
Ave. Test Fuel Load MC % DB	24,25	21,58	22,77	20,02	20,35	21,10
Test Fuel Load - kg DB	5,67	6,98	6,36	6,51	6,67	6,81
Test fuel Loading density lb./ft3	10,29	12,39	11,41	11,42	11,71	12,03

Residual SU fuel wt. - as fired lb.	2,6	NA	NA	NA	NA	NA
Residual SU fuel wt.- as % of test fuel load	16,7%	NA	NA	NA	NA	NA
Test run duration - minutes	102	349	321	340	318	239
Test run duration - h	1,70	5,82	5,35	5,67	5,30	3,98
Test fuel load wt at the end of the test - as fired lb	1,4	0	0	0	0	0
total fuel burned kg Db	6,70	6,98	6,36	6,51	6,67	6,81
% test fuel load wt at end of the test	9,0%	0,0%	0,0%	0,0%	0,0%	0,0%

2.4 TEST RUN RESULTS SUMMARY

Model name / number	IRON STRIKE					
Usable Firebox volume	1,51					
Convection air Fan (no, Standard, option)	optional					
Test runs nu.	1,1	1,2	2	3	4	5
Date tested	May 23rd 2018	May 23rd 2018	May 24th 2018	May 25th 2018	May 28th 2018	May 29th 2018
Test run category	H	M	M	L	M	M
Burn rate - Kg/hr DB	3,47	1,20	1,19	1,15	1,26	1,71
Burn rate as % of low to high Midpoint	NA	34,5%	34%	33,1%	36%	49%
Burn duration - h	1,70	5,82	5,35	5.7	5,30	4.0
Heat output btu/hr	42 574	16 496	15 822	15 999	NA	22 363
Average Dilution Tunnel Flow Rate - dscfm	273,6	290,6	281,8	285,8	297,5	276,8
Average Sample Flow Rates - dscfm						
Train 1	0,1636	0,1627	0,1640	0,1630	0,1626	0,1613
train 2	0,1691	0,1668	0,1699	0,1693	0,1674	0,1659
Total PM Emissions - g						
Train 1 g	9,71	4,55	38,43	7,01	33,50	8,41
train 2 g	8,73	4,07	37,72	6,75	33,77	7,50
Average	9,22	4,31	38,07	6,88	33,63	7,95
PM emission train precision %	5,30%	5,66%	0,94%	1,89%	0,39%	5,72%
PM emission g/kg	1,38	0,62	5,98	1,06	5,04	1,17
PM emission rate g/h	5,43	0,74	7,12	1,21	6,35	2,00
Total Co Emission g	153,9	467,6	572,6	341,5	NA	348,9
Co emission Rate g/h	106,1	80,4	107,0	60,3	NA	87,6
1st hour emission rate g/h	8.2	4.64	4.12	6.31	4.57	7.5
Overall Efficiency - CSA B415,1						
% HHV Basis	64,15%	71,72%	69,37%	72,93%	NA	68,26%
% LHV Basis	69,02%	77,17%	74,64%	78,47%	NA	73,45%

*Run 4 will be rejected from the weighted average, gas analyzer signal has been lost before the end of the test.

*Run 2 rejected from the weighted average, replaced by run 1.2 & run5

2.5 WEIGHTED AVERAGE SUMMARY

Model name / number	IRON STRIKE		
Usable Firebox volume	1,51		
Convection air Fan (no, Standard, option)	optional		
average for each test run category	L	M	H
burn rate kg/h DB	1,15	1,45	3,47
PM Emission rate - g/h	1,21	1,37	5,43
Co emission rate - g/h	60,26	83,99	122,43
Overall Efficiency - CSA B 415,1			
% HHV Basis	72,9%	70,0%	64,15%
% LHV Basis	78,5%	75,3%	69,02%
Heat output - Btu/hr	15999	19429	42574
Category weighting	0,4	0,4	0,2

*Medium run results are the average from run 1.2 & run 5

2.6 WEIGHTED AVERAGE FINAL RESULTS

ASTM E 3053 Weighted averages			
PM Emission Rate - g/h	2,12		
CO Emission Rate g/h	78.9		
Overall Efficiency - CSA B415,1			
% HHV Basis	70,00%		
% LHV Basis	75,32%		
Heat output range - Btu/h	15 999	To	42574
Co Arithmetic average g/min	1.4		

2.7 TEST FACILITY CONDITIONS

Run Number	*Room Temperature*		*Barometric pressure*		*Relative humidity*		*Air Velocity*	
	Before	*After*	*Before*	*After*	*Before*	*After*	*Before*	*After*
	(F)	*(F)*	*(in.Hg)*	*(in.Hg)*	*(%)*	*(%)*	*(ft/min)*	*(ft/min)*
1.1	76	85	29,77	29,83	45,5	36,4	4	15
1.2	76	85	29,77	29,83	45,5	36,4	4	15
2	79	86	30,00	29,83	31,9	26,5	6	3
3	82	85	29,68	29,53	32,4	28,8	4	9
4	82	86	29,80	29,71	36	33	9	8
5	78	85	29,85	29,85	52,4	37,7	3	5

2.8 DILUTION TUNNEL FLOW RATE MEASUREMENTS AND SAMPLING DATA (ASTM E2515)

Average dilution tunnel measurements				*Sample Data*			
Run Number/ test category	*Burn Rate (Min)*	*Volumetric Flow Rate (dscf/min)*	*Total Temperatures (°R)*	*Volume sampled (DSCF)*		*Particulate catch (mg)*	
				1	*2*	*1*	*2*
1.1	102	273,63	598,48	16,683	17,252	6.00	5,60
1.2	349	290,64	556,99	56,777	58,196	3,20	3,00
2	321	281,76	558,78	52,633	54,531	23,00	23,40
3	340	285,76	555,08	55,418	57,557	4,00	4,00
4	318	297,47	560,96	51,708	53,232	18,70	19,40
5	239	276,77	570,63	38,556	39,658	5,10	4,70

2.9 DILUTION TUNNEL DUAL TRAIN PRECISION

Run Number / test category	*Sample Ratio*		*Total Emission (g)*		
	Train 1	*Train 2*	*Train 1*	*Train 2*	*% Deviation*
1.1	1673,00	1617,81	9,71	8,73	5,30%
1.2	1786,51	1742,94	4,55	4,07	5,66%
2	1718,38	1658,57	38,43	37,72	0,94%
3	1753,20	1688,03	7,01	6,75	1,89%
4	1829,40	1777,05	33,50	33,77	0,39%
5	1715,62	1667,92	8,41	7,50	5,72%

3 PROCESS DESCRIPTION

3.1 DISCUSSION

The heater was received in a good shape by a carrier in April 2018. Pre-burn was done by the manufacturer as preliminary testing with cord wood at Polytests facility. The side walls of the combustion chamber are lined with firebricks. The secondary air inlet is fixed and the primary air damper is located at the bottom front of the firebox. Post combustion is ensured by the secondary 3 tubes located at the top of the firebox. Above the tubes a is a deflector made of ceramic fiber a 1-inch thick piece of wool on top of it.

3.2 UNIT DIMENSIONS

Baffle

- Location: between top of combustion chamber and hearth
- Restriction: 1 ¾ X 8 inches at the front of unit
- Dimensions: covers the hearth area minus the restriction at front
- Material: Stainless steel ceramic fibre

Bricks

- Brick lining bottom, back and side of the firebox. Refractory brick 1 inch Thick.

Flue gas exhaust

- Location: top
- Dimensions: 6 in. diameter
- Material: Steel

Gasket

- Door: rope 7/8 diameter fiberglass
- Glass: Gasket tape ¾ x 1/8 fiberglass
  For more details and location refer to appendix 6

Overall unit dimension

- Firebox dimensions: 18 in wide x 11.125 in. deep x 10 ¼ in. and 10 ¾ high
- Usable volume: 1.51 cuft
- Overall dimension: 23 5/8-inch-wide x 23-inch-deep x 27.5-inch-high

Convection fan

- Regal Beloit America/Fasco BLFSBB1/71639114
- Ebm 55442.501908

Catalyst

- none

3.3 AIR SUPPLY SYSTEM

Description

- Primary air: Bottom front of the heater
- Secondary air: sides of the heater Refer appendix 6 for drawing details

Characterization

The following table shows the inlet and outlet sections of each system. The air introduction system number is referred to on a set of drawings in Appendix 6.

AIR INTRODUCTION SYSTEM		INLET (1) sq. in.			OUTLET
Identification	Type	Imin	Imax	Controlled	(sq. in.)
A *	Primary	0.411	4.21	yes	6.87
B *	Secondary	6.0	6.0	NO	1.104
C *	Pilot	none	none	none	none

* This section would be filled by measuring and comparing with the manufacturer's drawings included in the test report.

Legend
Identification: Tag name referred to on drawings in Appendix 14, section airflow pattern
Type: Characterization of air intake
Imin: Minimum air intake of a particular air channel
Imax: Maximum air intake of a particular air channel
Controlled: Determines if a provision for air control is present
Outlet: Total air outlet of a particular air channel

3.4 OPERATION DURING TEST

Run #1.1
This run was performed on May 23rd 2018. It lasted 102 minutes and a maximum burn rate was obtained at 3.47 kg/hr & emission at 5.4 gr/hr. The convection fan was at on position during the entire test. The air inlet damper was fully open.

Run #1.2
This run was performed on May 23rd 2018 as a continuation of the maximum burn rate (run1.1). It lasted 349 minutes and a Medium burn rate was obtained at 1.2 kg/hr & emission at 0.74 gr/hr. The convection fan was at on position during the test. The air inlet damper was fully closed.

Run #2
This run was performed on May 24th 2018. It lasted 321 minutes and a medium burn rate was obtained at 1.19 kg/hr & emission at 7.12 gr/hr. The convection fan was at on position during the entire test. The air inlet damper was fully close. This run will be eliminated from the weighted average and replace by the average of run 1.2 and run 5

Run #3
This run was performed on May 25th 2018. It lasted 340 minutes and a minimum burn rate was obtained at 1.15 kg/hr & emission at 1.21 gr/hr. The convection fan was at on position during the test. The air inlet damper was fully close. During the test filter went to 79°F for a short period of time, within 1°F of the 80°F limitation it doesn't impact the result of the sampling, it still within the precision of the thermocouple.

Run #4
This run was performed on May 28th 2018. It lasted 318 minutes and a Medium burn rate was obtained at 1.23 kg/hr & emission at 6.35 gr/hr. The convection fan was at on position during the test. The air inlet damper was at the medium setting. This run will be rejected from the weighted average, gas analyzer signal has been lost before the half of the test, without those data average efficiency and co emissions cannot be calculated. This test needs to be done again for all the calculation.

Run #5
This run was performed on May 29th 2018. It lasted 239 minutes and a Medium burn rate was obtained at 1.71 kg/hr & emission at 2.00 gr/hr. The convection fan was at on position during the test. The air inlet damper was at the medium setting.

- Details: Refer to the front page of each test run data sheets found in appendix for the detailed test sequence showing air supply settings and adjustments, fuel bed adjustments and operational specifics of the test unit.

Test fuel cribs

- Type of wood: Red Oak, 18 to 28% dry basis moisture content
- Description: for each test, description of the fuel crib is found on the front page of each test run data sheet together with photograph in appendix.

3.5 START-UP OPERATION

The complete manufacturer's firing procedure of each burn rate category is fully described in appendix 13.

3.6 SAMPLING LOCATIONS

Particulate samples are collected from the dilution tunnel at a point 15 feet from the tunnel entrance. The tunnel has two elbows in the system ahead of the sampling section. The sampling section is a continuous 20-foot section of 8-inch diameter pipe straight over its entire length. Tunnel velocity pressure is determined by a standard pitot tube located 48 inches from the beginning of the sampling section. Thermocouple is installed on the pitot tube to measure the dry bulb temperature. MC is assumed, as allowed, to be 4%. Tunnel samplers are located 56 inches downstream of the pitot tube and 24 inches upstream from the end of this section.

3.7 DRAWINGS

Various drawings of the stack gas sampling train and of dilution tunnel system are found in Appendix 6.

3.8 EMISSIONS EFFICIENCY TESTING EQUIPMENT LIST

The complete test equipment list together with all corresponding calibration data can be found in Appendix 3.

4 SAMPLING METHODS

4.1 PARTICULATE SAMPLING

Particulates were sampled in strict accordance with ASTM E2515. This method uses two identical sampling systems with Gelman A/E 61631 binder free (or equivalent), 47 mm diameter EMFAB TX40H 120-WW Pall filters. The dryers used in the sample systems are filled with "Drierite" before each test run.

5 QUALITY ASSURANCE

5.1 INSTRUMENT CALIBRATION

5.1.1 GAS METERS

At the conclusion of each test program the gas meters are verified using the reference dry gas meter. This process involves sampling the train operation for 1 cubic foot of volume. With readings made to .01 fr', the resolution is 1 %, giving an accuracy higher than the 2% required by the standard.

5.1.2 SCALES

Before each test program, the different scales used are checked with traceable calibration weights to ensure their accuracy.

5.1.3 GAS ANALYZERS

The continuous analyzers are zeroed and spanned before each test with NBS traceable gases. A mid-scale multi-component calibration gas is then analyzed (values are recorded). At the conclusion of a test, the instruments are checked again with zero, span and calibration gases (values are recorded only). The drift in each meter is then calculated and must not exceed 5% of the scale used for the test.

5.2 TEST METHOD PROCEDURES

5.2.1 LEAK CHECK PROCEDURES

Before and after each test, each sample train is tested for leaks. Leakage rates are measured and must not exceed 0.02 CFM or 4% of the sampling rate. Leak checks are performed checking the entire sampling train. Pre-test and post-test leak checks are conducted with a vacuum of 5 inches of mercury. Vacuum is monitored during each test and the highest vacuum reached is then used for the post-test vacuum value. If leakage limits are not met, the test run is rejected. During these tests, the vacuum is typically less than 2 inches of mercury. Thus, leakage rates reported are expected to be much higher than actual leakage during the tests.

5.2.2 TUNNEL VELOCITY FLOW MEASUREMENT

The tunnel velocity is calculated from a center point pitot tube signal multiplied by an adjustment factor. This factor is determined by a traverse of the tunnel as prescribed in EPA Method 1. Final tunnel velocities and flow rates are calculated from EPA Method 2, Equation 6.9 and 6.10. (Tunnel cross sectional area is the average from both lines of traverse.)

Pitot tubes are cleaned before each test and leak checks are conducted after each test.

5.2.3 PM SAMPLING PROPORTIONALITY (ASTM E2515)

Proportionalities were calculated in accordance with ASTM E2515. The data and results are found in appendix.

APPENDIX 1: Raw data, forms and results

Paramètres

Tous les facteurs de corrections et autres paramètres qui peuvent être modifiés par l'utilisateur du fichier sont regroupés ici.

Code verrouillage:	IHP

Description du test

Test standard	EPA
Run #	1
Date	May 23, 2018
Technicien	M.M
Project #	PI 20165

Description de l'unité

Manufacturier	IHP	
Modèle	IRON STRIKE	
Combustion system	Non-Cat	
Appliance type	wood stove	
Firebox volume	1,51	cu ft.
Appliance weight empty	n.a	lbs
Fan (no, Standard, Option)	optional	

Paramètres du test

Logging time	1	min
Manufacturer's rated heat output	n.a	BTU/h Donnée fournie par le manfacturier
Targeted category	1	
Targeted output	n.a	BTU/h
Cp steel	n.a	BTU/lb-°F

Échantillonnage

Blank sampling rate	0,20	cuft/min
Internal probe diameter	0,18	in.
Calibration Factor (DGM #1):	0,988	Dimensionless
Equipment number (DGM #1):	em 178	
Calibration Factor (DGM #2):	0,991	Dimensionless
Equipment number (DGM #2):	em 179	
Calibration Factor (DGM #3):	0,996	
Equipment number (DGM #3):	em 070	Dimensionless

Tunnel

Targeted tunnel flow rate	300	scfm
Tunnel diameter	8	in.
Molecular weight	28,78	May be assumed to be 28,78 (EPA) Si B-415 = 29
Pitot tube type	Standard	
Pitot tube coefficient	0,99	Dimensionless

Project nu.	PI 20165
Date	May 23, 2018
Technicien	m.m

Fuel data

Fuel type	Cord	
Fuel specie	Oak	
HHV	20207,0	kJ/kg
%C	49,5	
%H	6,6	
%O	43,7	
%Ash	0,2	
HHV	8689,9	Btu/lb
LHV	7600,4	Btu/lb

Default Fuel Values

	D. Fir	Oak/Maple
HHV	19 810	20 207
%C	48,73	49,5
%H	6,87	6,62
%O	43,9	43,7
%Ash	0,5	0,2
HHV (Btu/lb)	8519	8690
LHV (Btu/lb)	7451	7600

Adjunct to ASTM E XXXX Wood Heater Cordwood Test Method - May 10, 2017 Version

Cordwood Fuel Load Calculators - 10 lb/ft^3 Nominal Load Density

Core 45-65% of Total Load Weight, Remainder 35-55% of Total Load Weight

Values to be input manually

For All Usable Firebox Volumes - High Fire Test Only

Nominal Required Load Density (wet basis)	10	lb/ft^3				
Usable Firebox Volume	1,51	ft^3				
Total Nom. Load Wt. Target	15,10	lb				
Total Load Wt. Allowable Range	14,30	to	15,90	lb		
Core Target Wt. Allowable Range	6,80	to	9,80	lb		
Remainder Load Wt. Allowable Range	5,30	to	8,30	lb		
						Mid-Point
Core Load Pc. Wt. Allowable Range	2,30	to	3,80	lb		3,05
Remainder Load Pc. Wt. Allowable Range	1,50	to	8,30	lb		4,90
	Pc. #					
Core Load Piece Wt. Actual	1	3,17	lb	In Range		
	2	3,14	lb	In Range		
	3	3,21	lb	In Range		
Core Load Total. Wt. Actual		9,52	lb	In Range		
	Pc. #					
Remainder Load Piece Wt.	1	6,01	lb	In Range		
(1 to 3 Pcs.)	2		lb	NA		
	3		lb	NA		
Remainder Load Tot. Wt. Act		6,01	lb	In Range		
Total Load Wt. Actual		15,53	lb	In Range		
Core % of Total Wt.		61%		In Range	45-65%	
Remainder % of Total Wt.		39%		In Range	35-55%	
Actual Load % of Nominal Target		103%		In Range	95-105%	
Actual Fuel Load Density		10,3	lb/ft^3			
Kindling and Start-up Fuel						
Maximim Kindling Wt. (20% of Tot. Load Wt.)		3,11	lb			
Actual Kindling Wt.		2,87	lb	In Range	18,5%	
Maximum Start-up Fuel Wt. (30% of Tot. Load Wt.)		4,66	lb			
Actual Start-up Fuel Wt.		4,36	lb	In Range	28,1%	
Allowable Residual Start-up Fuel Wt. Range	1,6	to	3,1	lb		Mid-Point
Actual Residual Start-up Fuel Wt.		2,6	lb	In Range		2,3
Total Wt. All Fuel Added (wet basis)		22,76	lb			
High Fire Test Run End Point Range	Low		High			Mid-Point
Based on Fuel Load Wt. (w/tares)	1,4	to	1,7	lb		1,6
Actual Fuel Load Ending Wt.		1,4	lb	In Range		

Load pieces Length in. 16 in.

Fuel Piece Moisture Reading (%-dry basis)						Pc. Wt. Dry Basis		
1	2	3	Ave.					
28	26,9	25,1	26,7	In Range		2,50	lb	1,14 kg
20,7	27,3	20,9	23,0	In Range		2,56	lb	1,16 kg
20,6	19,9	19,9	20,1	In Range		2,67	lb	1,21 kg
26,3	24,8	26,8	26,0	In Range		4,77	lb	2,16 kg
			NA	NA		NA	lb	NA kg
			NA	NA		NA	lb	NA kg
Total Load Ave. MC (%-dry basis)			24,2	In Range				
Total Load Ave. MC % (wet basis)			19,5					
Total Test Load Weight (dry basis)						12,50	lb	5,67 kg
Kindling Moisture (%-dry basis)								
9,1	9	9,3	9,1	In Range		2,63	lb	1,19 kg
Start-up Fuel Moisture Readings (%-dry basis)								
19,1	20,6	20,4	20,0	In Range		3,63	lb	1,65 kg
Total Wt. All Fuel Added (dry basis)						18,76	lb	8,51 kg
Total Wt. All Fuel Burned (dry basis)						14,8	lb	6,7 kg

Load high fire

Adjunct to ASTM E XXXX Wood Heater Cordwood Test Method - May 10, 2017 Version

Cordwood Fuel Load Calculators - 12 lb/ft^3 Nominal Load Density

Core 45-65% of Total Load Weight, Remainder 35-55% of Total Load Weight

Values to be input manually

THIS DOCUMENT IS NOT AN ASTM STANDARD; IT IS UNDER CONSIDERATION WITHIN AN ASTM TECHNICAL COMMITTEE BUT HAS NOT RECEIVED ALL APPROVALS REQUIRED TO BECOME AN ASTM STANDARD. IT SHALL NOT BE REPRODUCED OR CIRCULATED OR QUOTED, IN WHOLE OR IN PART, OUTSIDE OF ASTM COMMITTEE ACTIVITIES EXCEPT WITH THE APPROVAL OF THE CHAIRMAN OF THE COMMITTEE HAVING JURISDICTION AND THE PRESIDENT OF THE SOCIETY. *COPYRIGHT ASTM, 100 BARR HARBOR DRIVE, WEST CONSHOHOCKEN, PA 19428. ALL RIGHTS RESERVED.*

For Usable Firebox Volumes up to 3.0 ft^3 - Low and Medium Fire

Nominal Required Load Density (wet basis)	12	lb/ft^3				
Usable Firebox Volume	1,51	ft^3				
Total Nom. Load Wt. Target	18,12	lb				
Total Load Wt. Allowable Range	17,21	to	19,03	lb		
Core Target Wt. Allowable Range	8,154	to	11,78	lb		
Remainder Load Wt. Allowable Range	6,34	to	9,97	lb		
						Mid-Point
Core Load Fuel Pc. Wt. Allowable Range	2,72	to	4,53	lb		3,62
Remainder Load Pc. Wt. Allowable Range	1,81	to	5,44	lb		3,62
	Pc. #					
Core Load Piece Wt. Actual	1	3,40	lb		In Range	
	2	3,52	lb		In Range	
	3	3,63	lb		In Range	
Core Load Total. Wt. Actual		10,55	lb		In Range	
	Pc. #					
Remainder Load Piece Wt.	1	5,19	lb		In Range	
(2 or 3 Pcs.)	2	2,96	lb		In Range	
	3		lb		NA	
Remainder Load Piece Weight Ratio - Small/Large		57%			In Range	≤ 67%
Remainder Load Tot. Wt. Act		8,15	lb		In Range	
Total Load Wt. Actual		18,70	lb		In Range	
Core % of Total Wt.		56%			In Range	45-65%
Remainder % of Total Wt.		44%			In Range	35-55%
Actual Load % of Nominal Target		103%			In Range	95-105%
Actual Fuel Load Density		12,4	lb/ft^3			
Allowable Charcoal Bed Wt. Range (lb)	1,9	to	3,7			Mid-Point
Actual Charcoal Bed Wt.		2,0	lb		In Range	2,8
Actual Fuel Load Ending Wt.		0,0	lb		Valid Test	≥ 90%
Total Wt. of Fuel Burned During Test Run lb.		18,7	lb			
Load pieces Length in.		16	in.			

Fuel Piece Moisture Reading (%-dry basis)

1	2	3	Ave.		Pc. Wt. Dry Basis			
27,5	25,8	26,9	26,7	In Range	2,68	lb	1,22	kg
20,7	27,4	19,4	22,5	In Range	2,87	lb	1,30	kg
19,1	20,1	19,3	19,5	In Range	3,04	lb	1,38	kg
19,6	19,2	19,8	19,5	In Range	4,34	lb	1,97	kg
20,9	21,4	20,9	21,1	In Range	2,45	lb	1,11	kg
			NA	NA	NA	lb	NA	kg
Total Load Ave. MC % (dry basis)			21,6	In Range				
Total Load Ave. MC % (wet basis)			17,7					
Total Test Load Weight (dry basis) →					15,38	lb	6,98	kg
Total Fuel Weight Burned During Test Run (dry basis)					15,4	lb	6,98	kg

For Usable Firebox Volumes above 3.0 ft^3 - Low and Medium Fire

Nominal Required Load Density (wet basis)	12	lb/ft^3				
Usable Firebox Volume		ft^3				
Total Nom. Load Wt. Target	0	lb				
Total Load Wt. Allowable Range	0,00	to	0,00	lb		
Core Target Wt. Allowable Range	0,00	to	0,00	lb		
Remainder Load Wt. Allowable Range	0,00	to	0,00	lb		
						Mid-Point
Core Load Fuel Pc. Wt. Allowable Range	0,00	to	0,00	lb		0,00
Remainder Load Pc. Wt. Allowable Range	0,00	to	0,00	lb		0,00
	Pc. #					
Core Load Piece Wt. Actual	1		lb		In Range	
	2		lb		In Range	
	3		lb		In Range	
Core Load Total. Wt. Actual		0,00	lb		In Range	
	Pc. #					
Remainder Load Piece Wt.	1		lb		In Range	
(3 or 4 Pcs.)	2		lb		In Range	
	3		lb		In Range	
	4		lb		NA	
Remainder Load Piece Weight Ratio - Small/Large		#NOMBRE!			#NOMBRE!	≤ 67%
Remainder Load Tot. Wt. Act		0,00	lb		In Range	
Total Load Wt. Actual		0,00	lb		In Range	
Core % of Total Wt.		#DIV/0!			#DIV/0!	45-65%
Remainder % of Total Wt.		#DIV/0!			#DIV/0!	35-55%
Actual Load % of Nominal Target		#DIV/0!			#DIV/0!	95-105%
Actual Fuel Load Density		#DIV/0!	lb/ft^3			
Allowable Charcoal Bed Wt. Range (lb)	0,1	to	-0,1			Mid-Point
Actual Charcoal Bed Wt.			lb		Out of Range	0,0
Actual Fuel Load Ending Wt.			lb		Valid Test	≥ 90%
Total Wt. of Fuel Burned During Test Run lb.		0,0	lb			

Fuel Piece Moisture Reading (%-dry basis)

1	2	3	Ave.		Pc. Wt. Dry Basis			
			#DIV/0!	#DIV/0!	#DIV/0!	lb	#DIV/0!	kg
			#DIV/0!	#DIV/0!	#DIV/0!	lb	#DIV/0!	kg
			#DIV/0!	#DIV/0!	#DIV/0!	lb	#DIV/0!	kg
			#DIV/0!	#DIV/0!	#DIV/0!	lb	#DIV/0!	kg
			#DIV/0!	#DIV/0!	#DIV/0!	lb	#DIV/0!	kg
			#DIV/0!	#DIV/0!	#DIV/0!	lb	#DIV/0!	kg
			NA	NA	NA	lb	NA	kg
Total Load Ave. MC % (dry basis)			#DIV/0!	#DIV/0!				
Total Load Ave. MC % (wet basis)			#DIV/0!					
Total Test Load Weight (dry basis) →					#DIV/0!	lb	#DIV/0!	kg
Total Fuel Weight Burned During Test Run (dry basis)					#DIV/0!	lb	#DIV/0!	kg

	Start	End
Barometer (kPa):	100,8	101
Barometer (in.Hg):	29,766229	29,82528877
Dry Bulb (F):	75,74	84,74
Humidity (%):	45,5	36,4
Air velocity (ft/min)	4	15

High fire test						
DGM #1	Final:	23885,231	cuft	Final:	676354,400	Liter
	Initial:	23867,385	cuft	Initial:	675849,060	Liter
DGM #2	Final:	22200,880	cuft	Final:	628658,900	Liter
	Initial:	22182,425	cuft	Initial:	628136,300	Liter
DGM room				Final:	615,250	cuft
				Initial:	606,400	cuft

min or med burnrate						
DGM #1	Final:	23946,139	cuft	Final:	678079,140	Liter
	Initial:	23885,300	cuft	Initial:	676356,360	Liter
DGM #2	Final:	22263,337	cuft	Final:	630427,480	Liter
	Initial:	22200,977	cuft	Initial:	628661,650	Liter
DGM room				Final:	624,250	cuft
				Initial:	615,250	cuft

Numéro de la ligne dans "Raw data" à partir duquel les données du test commence	183
Numéro de la ligne dans "Raw data" à partir duquel les données du highfire test commence	198
Numéro de la ligne dans "Raw data" à partir duquel les données du min ou medium fire test commence	305

Autres données à rentrer: dans preload data, load data, traverse et filter set weight

Project nu.	PI 20165
Date	May 23, 2018
Technicien	mm

Tunnel Traverse Worksheet (for velocity calculations)

Static Pressure: 0,13 in. H20
Barometer: 29,766 in. Hg

Pour un tunnel de 12" et plus, prendre 6 lectures

	TUNNEL VELOCITY	TUNNEL TEMP	SQUARE ROOT
	In. wc	°F	
A center			0,0000
B center			0,0000
A1			0,0000
A2			0,0000
A3			0,0000
A4			0,0000
A5			0,0000
A6			0,0000
B1			0,0000
B2			0,0000
B3			0,0000
B4			0,0000
B5			0,0000
B6			0,0000
AVERAGE	#DIV/0!	#DIV/0!	0,0000

PITOT CONSTANT=
0,936

Pour un tunnel moins de 12", prendre 4 lectures

	TUNNEL VELOCITY	TUNNEL TEMP	SQUARE ROOT
	In. wc	°F	
A center	0,050	74,7	0,2236
B center	0,049	74,96	0,2214
A1	0,040	74,63	0,2000
A2	0,044	74,71	0,2098
A3	0,048	74,84	0,2191
A4	0,039	74,79	0,1975
B1	0,039	74,820	0,1975
B2	0,045	75,030	0,2121
B3	0,042	75,010	0,2049
B4	0,039	75,100	0,1975
AVERAGE	0,0435	74,8590	0,2083

Project nu.	PI 20165
Date	May 23, 2018
Technicien	mm

Filter set weight highfire

	System 1 (g) 1st hour				System 1 (g)				System 2 (g)				Ambient blank (g)	Date	Heure
	probe	front	back	gasket	probe	front	back	gasket	probe	front	back	gasket	Filter		
Number	9	114	115	22	13	116	117	23	39	118	119	34	120		
Before (1)															
Before (2)															
Before (3)															
Before (4)															
Before (5)	61,4473	0,0835	0,0842	35,1537	95,1502	0,0825	0,0834	34,3036	110,2771	0,0821	0,0836	35,1496	0,0821	2018-05-22	17:00
Before (6)	61,4473	0,0835	0,0842	35,1537	95,1502	0,0825	0,0834	34,3036	110,2771	0,0821	0,0836	35,1496	0,0821	2018-05-23	09:00
After (1)	61,4477	0,0868	0,0843	35,1570	95,1507	0,0829	0,0833	34,3053	110,2777	0,0859	0,0832	35,1547	0,0822	2018-05-23	14:00
After (2)	61,4477	0,0867	0,0841	35,1562	95,1507	0,0827	0,0830	34,3046	110,2777	0,0856	0,0831	35,1537	0,0822	2018-06-04	08:00
After (3)	61,4477	0,0866	0,0841	35,1562	95,1507	0,0826	0,0829	34,3046	110,2777	0,0856	0,0830	35,1537	0,0822	2018-06-13	08:00
After (4)															
After (5)															
After (6)	61,4477	0,0866	0,0841	35,1552	95,1507	0,0826	0,0829	34,3046	110,2777	0,0856	0,0830	35,1517	0,0822	2018-06-13	08:00
Difference	0,0004	0,0031	-0,0001	0,0015	0,0005	0,0001	-0,0005	0,0010	0,0006	0,0035	-0,0006	0,0021	0,0001		
Total (mg)		4,9				6				5,6			0,1		
Total ajusté (mg)		**4,80**				**5,90**				**5,50**					

Project nu.	PI 20165
Date	May 23, 2018
Technicien	mm

Filter set weight Low/ medium fire

	System 1 (g) 1st hour				System 1 (g)				System 2 (g)				Ambient blank (g)	Date	Heure
	probe	front	back	gasket	probe	front	back	gasket	probe	front	back	gasket	Filter		
Number	7	121	122	3	11	123	124	4	41	125	126	11	127		
Before (1)															
Before (2)															
Before (3)															
Before (4)															
Before (5)	61,4771	0,0833	0,0834	35,1775	93,7256	0,0838	0,0834	33,6113	110,3647	0,0836	0,0840	34,6192	0,0825	2018-05-22	17:00
Before (6)	61,4770	0,0833	0,0834	35,1776	93,7256	0,0838	0,0834	33,6114	110,3648	0,0836	0,0840	34,6191	0,0825	2018-05-23	11:00
After (1)	61,4772	0,0839	0,0829	35,1824	93,7258	0,0836	0,0837	33,6142	110,3654	0,0848	0,0839	34,6229	0,0826	2018-05-23	18:30
After (2)	61,4771	0,0834	0,0826	35,1809	93,7258	0,0833	0,0834	33,6124	110,3654	0,0845	0,0837	34,6211	0,0826	2018-06-04	08:00
After (3)	61,4771	0,0833	0,0826	35,1809	93,7258	0,0833	0,0833	33,6124	110,3654	0,0844	0,0836	34,6211	0,0826	2018-06-13	08:00
After (4)															
After (5)															
After (6)	61,4771	0,0833	0,0826	35,1809	93,7258	0,0833	0,0833	33,6124	110,3654	0,0844	0,0836	34,6211	0,0826	2018-06-13	08:00
Difference	0,0001	0,0000	-0,0008	0,0033	0,0002	-0,0005	-0,0001	0,0010	0,0006	0,0008	-0,0004	0,0020	0,0001		
Total (mg)		2,6				3,2				3			0,1		
Total ajusté (mg)		**2,50**				**3,10**				**2,90**					

Project nu.	PI 20165
Date	May 23, 2018
Technicien	mm

SFBA EPA EMISSION RESULTS

Test Duration: **102** min

PRESSURE FACTOR:	DGM 1	0,97354	
	DGM 2	0,97172	
	DGM 3	0,99585	
TEMPERATURE FACTORS	DGM 1	0,97143	
	DGM 2	0,97034	
	DGM 3	0,97814	
VOLUMES SAMPLED	DGM 1	16,683	SCft
	DGM 2	17,252	Scft
	DGM 3	8,584	SCft
TOTAL TUNNEL VOLUME :		27910	

SAMPLE RATIOS

Sample Train 1:	1673,002
Sample Train 2:	1617,807

Paticulate concentration

Sample Train 1	**0,000360**	g/dscf
Sample Train 2	**0,000325**	g/dscf
Room	**0,000012**	g/dscf

TOTAL EMISSIONS

Sample Train 1	**9,71**	g
Sample Train 2	**8,73**	g

EMISSION RATES

Sample Train 1	**5,71**	g/hr
Sample Train 2	**5,14**	g/hr
1st hour emission rate	**8,20**	g/hr

	Train 1	Train 2
Cs	0,0003597	0,0003246

RESULTS

Average emission rate: 5,4 g/hr

Burn Rate : 3,473 Dry kg/hr

BAROMETRIC PRESSURE

Average:	29,79575878	in Hg
Start:	29,7662288	in Hg
End:	29,82528877	in Hg

DGM CONTROLLER VALUES

DGM 1	Final:	23885,231	Cuft
	Initial:	23867,385	Cuft
DGM 2	Final:	22200,880	Cuft
	Initial:	22182,425	Cuft
DGM #3	Final:	615,250	Cuft
	Initial:	606,400	Cuft

TEMPERATURES

DGM 1	543,527	°R
DGM 2	544,141	°R

CALIBRATION FACTORS

DGM 1	0,9885
DGM 2	0,9914
DGM #3	0,9958

TUNNEL FLOW RATE: 273,631 Dscfm

PARTICULATE CATCH

Total Sample Train 1:	6,00	mg
Total Sample Train 2:	5,60	mg
Total Sample Train 1 1st hour:	4,90	mg

DEVIATION: 5,30%

*		*	*	*	*1	*2	*3	*4	*5	*6	*7	*8
Elapsed		Weight			Flue	Room	Tunnel	Unit	Unit	Unit	Unit	Unit
Time	Raw data row	Remaining	CO	CO_2	Gas	Temp	Dry Bulb	Top	Back	R.Side	L.Side	Bottom
min		lbs	%	%	°F	°F	°F	°F	°F	°F	°F	°F
0,00	183,00	7,1	0,0	0,1	188,3	76,4	114,9	79,4	75,2	75,9	75,3	75,3
1,0	184,0	6,9	0,0	0,1	306,6	76,8	111,9	90,6	75,3	76,0	75,6	75,4
2,0	185,0	6,8	0,1	0,1	474,7	76,8	116,9	108,1	75,6	76,3	76,7	75,4
3,0	186,0	6,5	0,1	0,7	582,7	76,9	127,0	121,1	76,1	77,0	78,4	75,6
4,0	187,0	6,3	0,0	1,0	725,3	77,2	144,3	137,6	77,4	78,3	82,8	76,0
5,0	188,0	5,9	0,2	14,7	814,1	77,5	159,0	151,6	79,9	80,4	91,9	76,5
6,0	189,0	5,4	0,7	15,8	850,9	77,6	166,9	162,4	83,8	83,6	102,7	77,0
7,0	190,0	5,0	1,5	16,6	855,9	78,1	171,9	170,8	89,1	87,8	116,3	77,7
8,0	191,0	4,5	2,6	16,9	871,7	78,3	176,3	178,4	95,5	93,4	128,9	78,8
9,0	192,0	4,0	2,6	17,0	929,5	78,7	182,2	187,0	102,2	100,4	140,5	80,8
10,0	193,0	3,6	1,2	17,2	944,6	79,0	183,9	201,9	109,1	108,3	153,6	84,1
11,0	194,0	3,2	0,6	16,9	961,4	78,9	185,0	212,9	116,8	117,4	168,0	88,8
12,0	195,0	3,0	0,4	12,6	809,0	78,8	167,3	218,7	125,9	127,9	183,9	95,0
13,0	196,0	2,8	0,3	10,3	736,3	78,9	156,7	213,1	135,9	139,0	199,4	101,8
14,0	197,0	2,6	0,3	9,5	698,9	79,2	149,6	207,3	146,8	150,2	214,3	109,5
15,0	198,0	17,7	0,5	8,2	645,0	79,1	182,1	191,9	158,5	162,1	231,1	99,8
16,0	199,0	17,6	0,2	9,8	574,4	79,1	164,5	146,9	169,0	173,0	241,7	125,4
17,0	200,0	17,5	0,7	4,2	524,4	78,8	136,8	141,7	178,7	182,8	249,0	132,7
18,0	201,0	17,3	0,7	3,7	500,1	78,8	129,4	136,6	186,0	191,2	253,9	139,1
19,0	202,0	17,1	0,2	8,6	624,8	79,0	141,7	136,0	191,3	198,8	257,8	144,7
20,0	203,0	16,8	0,3	9,4	677,1	79,3	148,2	137,8	195,2	205,7	262,3	149,8
21,0	204,0	16,6	0,2	13,0	771,6	79,5	160,0	141,9	198,5	213,1	267,6	154,8
22,0	205,0	16,2	0,2	13,9	802,7	80,1	164,9	146,4	201,5	219,9	274,5	159,6
23,0	206,0	16,0	0,2	13,3	787,5	79,9	165,2	149,2	204,5	226,2	282,5	164,4
24,0	207,0	15,7	0,2	13,2	781,4	79,6	163,1	132,9	186,5	228,0	288,8	169,2
25,0	208,0	15,4	0,2	13,3	774,0	79,8	162,6	128,6	177,4	232,2	295,6	173,9
26,0	209,0	15,1	0,3	12,1	756,5	79,4	161,0	125,6	170,5	236,9	302,6	178,5
27,0	210,0	14,9	0,2	10,2	711,6	80,2	156,4	125,0	165,2	241,7	309,4	183,0
28,0	211,0	14,6	0,2	9,2	676,9	79,9	151,2	122,4	160,9	245,7	315,8	186,4
29,0	212,0	14,5	0,2	8,6	652,8	80,3	147,4	118,8	158,0	249,5	320,9	189,7
30,0	213,0	14,3	0,3	7,8	628,4	80,0	145,0	115,3	155,2	253,2	326,0	192,1
31,0	214,0	14,1	0,4	7,2	605,6	80,2	141,5	113,6	153,4	256,1	329,8	194,1
32,0	215,0	13,9	0,4	6,9	590,8	80,3	138,9	109,9	151,6	258,9	333,3	195,8
33,0	216,0	13,8	0,4	6,8	579,3	80,4	137,0	106,8	150,6	261,6	336,1	197,4
34,0	217,0	13,7	0,3	6,9	580,4	80,2	136,7	107,5	149,7	263,0	338,3	198,9
35,0	218,0	13,5	0,2	7,7	591,2	79,7	137,4	105,5	148,5	265,1	340,5	200,6
36,0	219,0	13,3	0,2	7,8	594,5	80,0	137,8	103,3	147,7	266,9	342,6	201,6
37,0	220,0	13,1	0,2	8,0	599,1	80,4	138,4	103,1	146,9	269,2	344,5	202,7
38,0	221,0	12,9	0,2	8,1	601,5	80,0	138,1	102,5	146,3	271,5	346,0	204,5
39,0	222,0	12,7	0,2	7,9	599,3	80,5	137,0	102,0	145,8	272,9	347,7	206,5
40,0	223,0	12,5	0,2	7,7	594,5	80,3	136,4	103,2	145,6	274,6	349,2	208,3
41,0	224,0	12,3	0,2	7,5	589,6	80,0	135,9	102,1	145,7	277,0	350,4	210,3
42,0	225,0	12,2	0,2	7,5	586,0	80,2	136,0	101,5	145,4	279,0	351,5	212,6
43,0	226,0	12,1	0,2	7,6	586,6	80,3	135,0	101,2	145,1	281,4	352,8	214,8
44,0	227,0	11,9	0,2	7,6	585,1	80,2	135,3	100,8	145,1	283,9	353,9	217,2
45,0	228,0	11,6	0,2	7,7	583,7	80,2	134,8	101,1	145,3	287,0	355,8	219,2
46,0	229,0	11,5	0,2	7,7	581,7	80,1	135,1	100,6	145,4	288,3	357,4	221,7
47,0	230,0	11,4	0,2	7,8	577,3	80,0	134,0	99,9	145,5	290,6	359,2	224,0
48,0	231,0	11,2	0,2	7,6	575,0	80,6	134,0	100,2	146,1	293,0	361,2	226,2
49,0	232,0	11,0	0,2	7,9	583,2	80,1	135,0	100,7	146,2	297,2	363,7	228,4
50,0	233,0	10,8	0,1	8,6	600,8	80,2	136,7	101,7	146,8	299,5	365,1	230,7
51,0	234,0	10,6	0,1	8,8	606,1	80,2	136,9	101,6	147,8	303,2	366,8	232,9
52,0	235,0	10,5	0,1	8,8	615,9	80,3	137,7	102,6	148,3	306,1	368,8	235,4
53,0	236,0	10,3	0,1	9,1	626,7	80,2	138,8	102,6	148,6	310,4	371,3	237,6
54,0	237,0	10,1	0,1	9,4	633,6	80,1	140,2	103,4	149,3	315,0	374,1	240,0
55,0	238,0	9,9	0,1	9,7	643,0	80,3	139,8	104,9	150,4	318,8	376,4	243,0
56,0	239,0	9,7	0,1	9,9	652,0	80,3	141,2	104,7	151,0	321,9	379,4	245,9
57,0	240,0	9,5	0,1	10,0	655,1	80,4	141,2	104,3	152,2	326,5	382,6	248,9
58,0	241,0	9,4	0,1	9,6	647,6	80,6	140,1	104,3	153,2	329,1	386,2	251,9
59,0	242,0	9,2	0,1	8,8	636,9	80,5	138,3	103,7	154,4	333,6	390,3	254,9
60,0	243,0	9,1	0,1	7,6	605,5	80,4	134,2	102,7	155,5	337,3	394,2	258,6
61,0	244,0	9,0	0,2	6,9	577,0	80,8	132,6	101,4	156,6	340,5	396,9	262,5
62,0	245,0	8,8	0,3	6,5	558,8	80,5	130,3	100,7	157,9	345,0	399,4	265,9
63,0	246,0	8,7	0,3	6,5	547,2	80,4	128,9	100,1	159,3	348,0	401,2	269,2
64,0	247,0	8,5	0,4	6,4	532,4	80,6	127,8	99,4	160,6	350,5	402,9	272,7
65,0	248,0	8,4	0,4	6,2	521,3	80,4	126,4	99,0	161,5	353,0	403,6	276,2
66,0	249,0	8,3	0,5	6,1	517,1	80,4	124,9	98,5	163,1	355,0	404,0	279,5
67,0	250,0	8,2	0,4	6,3	518,4	80,3	124,3	98,2	164,4	357,2	404,6	281,5
68,0	251,0	8,1	0,3	6,6	521,0	80,0	125,4	98,0	165,2	359,0	404,6	284,1
69,0	252,0	8,0	0,2	6,7	522,6	79,7	124,0	97,7	165,8	360,7	405,1	286,2
70,0	253,0	7,9	0,3	7,0	526,4	79,8	125,5	97,5	166,9	361,7	405,9	288,8
71,0	254,0	7,8	0,2	7,4	541,5	79,8	125,9	97,9	168,2	363,5	407,0	291,0
72,0	255,0	7,6	0,2	7,4	546,0	80,2	126,1	99,3	169,3	365,5	408,4	293,3
73,0	256,0	7,5	0,2	7,5	548,3	79,9	127,0	98,3	170,5	366,3	410,1	295,5
74,0	257,0	7,4	0,3	7,2	540,9	79,9	126,8	98,4	171,5	368,1	412,0	297,9
75,0	258,0	7,3	0,3	6,9	535,0	80,2	125,4	99,3	172,8	370,1	414,4	300,5
76,0	259,0	7,2	0,2	7,2	550,9	80,1	126,7	99,2	173,9	371,7	416,3	303,7
77,0	260,0	7,1	0,2	8,0	565,0	80,0	128,0	99,9	175,7	371,3	418,0	305,8
78,0	261,0	6,9	0,3	7,7	558,9	80,2	126,4	100,0	176,8	372,8	420,2	308,9
79,0	262,0	6,9	0,3	7,4	552,0	80,0	126,5	100,2	178,4	374,5	423,1	311,6
80,0	263,0	6,7	0,3	7,2	547,3	80,0	127,1	100,5	180,1	375,9	425,6	314,8
81,0	264,0	6,6	0,2	8,3	565,6	80,2	128,7	101,2	182,2	376,7	428,3	318,6
82,0	265,0	6,5	0,1	8,6	574,9	80,0	129,4	100,2	184,4	377,9	431,7	321,4
83,0	266,0	6,3	0,1	8,5	577,1	80,3	129,1	99,7	186,3	378,7	435,5	324,7
84,0	267,0	6,2	0,1	8,7	583,1	80,5	129,3	100,2	189,0	379,2	437,8	328,0
85,0	268,0	6,0	0,1	9,4	594,8	80,2	131,5	100,3	190,8	379,7	440,3	331,2
86,0	269,0	5,8	0,1	9,6	599,6	80,3	132,5	99,8	193,8	380,3	443,8	334,6
87,0	270,0	5,7	0,1	9,3	598,5	80,4	132,0	99,9	196,5	381,7	446,9	338,1
88,0	271,0	5,6	0,1	8,9	592,8	80,6	131,4	100,1	200,0	381,9	449,1	342,2
89,0	272,0	5,5	0,1	8,0	577,2	80,5	129,9	99,9	203,4	383,7	451,6	345,6
90,0	273,0	5,4	0,1	7,4	563,9	80,7	129,1	100,1	206,6	384,5	453,5	349,2
91,0	274,0	5,2	0,2	7,2	549,2	80,6	127,5	98,7	209,6	385,8	455,4	353,5
92,0	275,0	5,1	0,2	7,0	545,0	80,1	126,2	98,7	212,2	387,0	457,2	357,2
93,0	276,0	5,0	0,2	7,4	549,0	80,1	127,0	98,3	214,0	386,8	459,0	361,0
94,0	277,0	4,9	0,1	7,8	551,9	80,2	127,3	98,0	215,7	387,7	461,4	364,7
95,0	278,0	4,8	0,2	7,7	549,8	80,2	127,1	98,0	217,5	388,1	463,3	368,4
96,0	279,0	4,7	0,2	7,4	542,7	80,0	126,0	97,8	218,6	387,9	463,2	372,7
97,0	280,0	4,6	0,2	6,9	532,3	80,3	125,0	97,6	220,5	388,4	462,8	376,5
98,0	281,0	4,5	0,3	6,9	527,8	80,1	124,5	97,4	221,0	389,7	461,9	380,7
99,0	282,0	4,3	0,2	7,2	530,8	80,2	124,9	97,5	221,8	389,8	459,9	384,0
100,0	283,0	4,2	0,2	7,3	536,5	80,3	124,8	97,5	222,3	391,6	458,2	387,6
101,0	284,0	4,1	0,1	7,6	538,1	80,7	125,7	97,5	223,1	391,8	456,8	390,8
102,0	285,0	4,0	0,1	7,9	542,9	80,6	126,0	97,9	223,0	393,4	457,0	394,1

SFBA EPA EMISSION RESULTS

Test Duration: **349** min

PRESSURE FACTOR:	DGM 1	0,97354	
	DGM 2	0,97172	
	DGM 3	0,99585	
TEMPERATURE FACTORS	DGM 1	0,96977	
	DGM 2	0,96872	
	DGM 3	0,97656	
VOLUMES SAMPLED	DGM 1	56,777	SCft
	DGM 2	58,196	Scft
	DGM 3	8,715	SCft
TOTAL TUNNEL VOLUME :		101432	

SAMPLE RATIOS

Sample Train 1:	1786,513
Sample Train 2:	1742,942

Paticulate concentration

Sample Train 1	**0,000056**	g/dscf
Sample Train 2	**0,000052**	g/dscf
Room	**0,000011**	g/dscf

TOTAL EMISSIONS

Sample Train 1	**4,55**	g
Sample Train 2	**4,07**	g

EMISSION RATES

Sample Train 1	**0,78**	g/hr
Sample Train 2	**0,70**	g/hr
1st hour emission rate	**4,64**	g/hr

	Train 1	Train 2
Cs	5,636E-05	5,155E-05

RESULTS

Average emission rate: 0,74 g/hr

Burn Rate : 1,200 Dry kg/hr

BAROMETRIC PRESSURE

Average:	29,79575878	in Hg
Start:	29,7662288	in Hg
End:	29,82528877	in Hg

DGM CONTROLLER VALUES

DGM 1	Final:	23946,139	Cuft
	Initial:	23885,300	Cuft
DGM 2	Final:	22263,337	Cuft
	Initial:	22200,977	Cuft
DGM #3	Final:	624,250	Cuft
	Initial:	615,250	Cuft

TEMPERATURES

DGM 1	544,461	°R
DGM 2	545,051	°R

CALIBRATION FACTORS

DGM 1	0,9885
DGM 2	0,9914
DGM #3	0,9958

TUNNEL FLOW RATE: 290,636 Dscfm

PARTICULATE CATCH

Total Sample Train 1:	3,20	mg
Total Sample Train 2:	3,00	mg
Total Sample Train 1 1st hour:	2,60	mg

DEVIATION: 5,66%

	*	*	*	*1	*2	*3	*4	*5	*6	*7	*8
	Weight			Flue	Room	Tunnel	Unit	Unit	Unit	Unit	Unit
Raw data row	Remaining	CO	CO_2	Gas	Temp	Dry Bulb	Top	Back	R.Side	L.Side	Bottom
	lbs	%	%	°F	°F	°F	°F	°F	°F	°F	°F
305,00	18,7	0,3	5,9	494,2	79,7	145,5	104,3	445,2	460,3	474,6	366,1
306,0	18,2	0,2	4,9	394,9	79,6	143,0	103,5	459,3	465,0	470,8	470,9
307,0	18,5	0,3	11,5	377,1	79,6	158,1	104,0	467,9	469,4	475,2	414,4
308,0	17,6	0,4	12,1	709,6	79,7	152,2	105,4	476,4	470,6	464,7	482,9
309,0	17,4	0,2	16,3	896,5	80,3	169,9	108,4	481,7	472,7	461,8	487,1
310,0	16,8	0,5	17,9	888,2	80,6	169,0	110,8	484,9	473,6	461,5	490,7
311,0	16,5	1,1	18,0	896,5	80,6	169,5	112,9	486,7	473,6	462,0	493,6
312,0	16,1	1,1	17,2	857,1	80,5	159,9	113,8	486,9	472,7	461,7	496,2
313,0	15,8	1,1	17,2	854,1	80,9	159,4	115,1	486,3	471,8	461,8	497,9
314,0	15,6	1,0	17,3	861,5	81,0	160,1	115,4	485,1	470,4	462,0	500,1
315,0	15,2	2,7	17,3	849,1	80,7	156,5	116,2	483,2	468,9	462,3	501,4
316,0	14,9	2,0	17,3	855,5	81,3	156,2	116,8	480,5	466,8	463,4	502,6
317,0	14,6	2,5	16,9	851,2	81,4	156,0	117,0	478,4	465,7	464,8	504,1
318,0	14,3	2,6	16,8	854,1	81,3	155,5	117,6	475,5	462,6	467,0	504,3
319,0	14,0	2,2	16,9	848,1	81,3	155,2	118,6	472,9	461,4	469,1	505,5
320,0	13,8	1,6	15,7	736,7	80,7	142,1	118,8	469,7	459,5	471,6	506,4
321,0	13,5	0,6	14,5	672,7	81,3	133,6	118,0	466,7	457,6	473,2	507,3
322,0	13,3	0,3	14,1	642,1	81,2	128,6	117,8	464,0	454,2	474,6	507,6
323,0	13,1	0,3	14,0	625,1	81,4	129,3	119,1	461,4	452,9	475,8	507,9
324,0	13,0	0,3	13,9	613,0	81,2	127,6	118,4	458,0	451,4	476,6	508,6
325,0	12,7	0,3	13,9	606,3	81,3	125,7	118,5	454,6	449,3	477,5	508,5
326,0	12,6	0,3	13,9	601,4	81,1	126,5	117,9	451,5	447,5	478,2	508,6
327,0	12,4	0,2	14,0	595,1	81,3	125,4	117,8	448,2	445,6	478,9	508,2
328,0	12,2	0,2	13,8	590,1	81,3	124,5	117,8	445,7	443,7	479,9	507,9
329,0	12,1	0,2	13,9	586,5	81,0	124,3	118,3	442,0	441,9	481,0	507,2
330,0	11,9	0,2	13,9	585,2	80,9	123,4	117,9	438,7	440,3	481,3	506,7
331,0	11,7	0,2	13,9	584,2	81,4	123,4	117,7	436,6	437,7	482,2	505,5
332,0	11,5	0,2	13,9	575,1	81,4	118,8	115,4	373,8	427,1	481,2	503,9
333,0	11,4	0,3	13,9	566,3	81,0	119,3	112,8	344,2	423,4	480,3	501,9
334,0	11,1	0,3	13,9	559,0	81,7	118,8	110,8	323,3	418,1	478,5	500,4
335,0	11,0	0,3	13,9	553,6	81,4	118,7	110,0	305,8	414,2	476,9	498,6
336,0	10,8	0,3	13,8	547,6	81,2	118,1	109,0	293,2	411,8	476,1	496,3
337,0	10,6	0,3	13,8	545,1	81,0	118,2	108,0	282,6	408,8	474,5	494,6
338,0	10,4	0,3	13,8	541,6	81,1	117,7	107,2	273,6	405,6	472,6	493,2
339,0	10,3	0,3	13,7	539,8	81,2	117,2	107,2	265,9	402,7	471,4	490,8
340,0	10,1	0,3	13,8	537,5	81,2	116,9	107,1	259,8	400,9	471,0	488,6
341,0	9,9	0,3	13,8	535,8	81,3	116,4	106,6	254,4	398,1	469,6	487,0
342,0	9,8	0,4	13,8	534,6	81,2	116,5	106,7	249,6	396,0	468,7	485,5
343,0	9,6	0,4	13,8	534,9	81,4	116,4	106,3	245,4	393,9	467,4	483,5
344,0	9,4	0,7	13,8	535,5	81,3	116,5	106,3	241,5	392,5	466,7	481,3
345,0	9,3	0,8	14,1	534,1	81,5	116,1	106,3	237,8	390,9	465,5	479,8
346,0	9,1	0,4	13,5	528,9	81,0	115,1	105,9	234,8	389,3	463,9	478,8
347,0	9,0	0,2	13,2	519,3	81,5	114,2	105,3	231,8	387,6	462,9	477,7
348,0	8,8	0,1	12,7	507,1	81,3	113,3	105,3	228,7	386,1	462,6	476,5
349,0	8,7	0,0	12,5	499,0	81,3	112,9	105,1	226,6	384,9	462,6	475,3
350,0	8,6	0,0	12,4	492,5	81,3	112,4	104,5	224,4	383,3	462,8	473,2
351,0	8,5	0,0	12,4	490,6	81,8	112,2	104,2	222,4	383,3	463,3	472,9
352,0	8,3	0,0	12,7	491,7	81,3	111,9	103,5	220,5	382,2	464,2	471,5
353,0	8,2	0,0	13,1	493,4	81,5	111,8	103,4	218,9	381,6	465,5	470,0
354,0	8,1	0,0	13,1	491,7	80,6	111,3	103,4	217,1	382,0	467,5	467,6
355,0	7,9	0,0	13,0	489,6	81,2	111,3	103,6	216,0	381,4	469,1	465,9
356,0	7,8	0,0	12,7	483,9	81,3	110,5	104,0	214,6	381,2	470,9	463,6
357,0	7,7	0,0	12,0	476,2	80,9	109,3	104,0	213,4	382,3	473,2	461,4
358,0	7,6	0,0	11,6	470,1	81,4	108,9	103,9	212,4	381,0	473,9	459,0
359,0	7,5	0,1	11,4	464,7	81,2	108,7	104,0	211,3	382,5	474,2	457,0
360,0	7,4	0,1	10,8	457,1	81,5	108,5	103,3	210,5	379,7	472,8	454,5
361,0	7,3	0,0	10,6	452,1	81,3	107,6	103,5	210,6	380,8	472,2	452,0
362,0	7,1	0,0	10,7	448,2	81,3	107,3	103,2	210,0	381,2	471,0	450,5
363,0	7,0	0,0	10,6	443,7	81,3	107,1	103,1	209,4	381,2	470,1	448,3
364,0	7,0	0,0	10,5	439,3	81,5	106,4	102,9	208,4	380,9	468,9	446,1
365,0	6,9	0,0	10,2	434,3	81,4	105,4	102,8	207,7	382,9	468,4	443,5
366,0	6,8	0,1	9,7	425,4	81,3	105,0	102,2	206,8	383,6	467,8	441,2
367,0	6,7	0,1	9,5	419,8	81,5	105,4	101,9	205,9	385,1	467,2	439,3
368,0	6,6	0,1	9,5	413,2	81,2	104,7	100,9	205,1	384,2	466,4	438,1
369,0	6,6	0,1	9,2	406,1	81,6	104,1	100,5	204,4	385,2	466,1	436,3
370,0	6,5	0,1	8,8	397,7	81,6	103,8	100,1	203,5	385,3	465,9	433,4
371,0	6,4	0,1	8,3	389,8	81,4	103,5	99,3	203,0	385,9	465,2	431,7
372,0	6,3	0,1	8,1	383,6	81,4	103,0	99,1	202,0	386,9	464,1	429,5
373,0	6,3	0,1	8,0	378,9	81,5	101,7	99,2	201,9	385,6	461,9	428,2
374,0	6,2	0,1	8,0	374,6	81,2	101,1	99,2	200,9	387,8	461,2	425,5
375,0	6,1	0,1	8,0	370,1	81,1	100,6	99,6	199,9	387,5	459,3	423,2
376,0	6,1	0,1	7,9	365,9	81,2	100,6	99,1	198,8	386,8	457,2	421,2
377,0	6,1	0,1	7,9	363,4	81,5	100,8	98,5	198,2	386,7	455,4	419,4
378,0	5,9	0,1	7,8	360,1	81,1	100,4	97,8	197,2	386,1	453,5	418,1
379,0	5,9	0,2	7,8	357,6	81,2	99,6	97,3	196,5	386,8	451,4	416,4
380,0	5,8	0,1	7,9	356,5	81,4	99,9	96,8	195,9	387,3	449,9	414,7
381,0	5,8	0,1	7,9	355,0	81,2	99,5	97,3	194,8	386,6	447,8	412,9
382,0	5,7	0,1	8,0	352,9	80,9	99,7	97,4	193,6	387,5	446,3	411,3
383,0	5,6	0,2	7,9	350,4	81,4	98,7	97,1	193,1	385,5	444,9	409,9
384,0	5,6	0,2	7,9	347,4	81,4	98,8	96,8	192,3	386,6	443,8	408,7
385,0	5,5	0,2	7,9	346,1	80,9	99,0	96,7	191,2	385,6	443,1	407,6
386,0	5,4	0,2	8,0	344,3	81,0	98,4	96,8	190,8	385,6	442,7	406,0
387,0	5,4	0,2	7,8	343,3	80,8	98,3	96,3	190,5	384,6	441,8	405,2
388,0	5,4	0,2	7,9	342,5	81,1	98,4	95,9	189,6	384,3	441,3	404,5
389,0	5,3	0,1	8,2	341,8	80,8	97,7	96,2	188,8	383,3	441,4	402,5
390,0	5,2	0,2	7,9	340,8	80,9	97,2	96,6	188,3	384,1	441,5	402,0
391,0	5,1	0,1	8,0	341,5	81,0	97,4	96,2	188,2	382,1	440,9	401,5
392,0	5,1	0,2	7,9	339,8	81,0	96,8	96,6	187,8	381,7	440,6	400,3
393,0	5,0	0,1	8,2	342,6	81,0	96,9	96,7	188,0	382,0	440,3	399,2
394,0	4,9	0,1	8,2	343,2	81,0	97,3	97,4	187,7	380,3	439,3	398,8
395,0	4,9	0,1	8,2	344,5	81,1	97,0	97,5	187,5	379,5	439,3	398,1
396,0	4,8	0,1	8,3	346,2	81,1	97,4	97,6	187,4	377,7	438,8	397,4
397,0	4,7	0,1	8,4	348,8	80,8	97,1	97,6	187,4	377,2	438,8	396,3
398,0	4,7	0,1	8,6	351,1	80,9	97,7	97,8	187,4	376,8	439,1	395,5
399,0	4,6	0,1	8,8	355,0	81,0	97,5	98,7	187,6	376,6	438,6	395,1
400,0	4,6	0,1	8,9	357,6	81,0	97,3	98,5	188,2	374,8	437,7	395,0

401,0	4,5	0,1	9,1	361,1	81,0	97,6	98,6	188,4	373,4	437,0	395,6
402,0	4,4	0,1	9,2	364,3	81,0	97,6	98,9	188,4	375,5	437,2	394,8
403,0	4,4	0,1	9,4	369,1	81,2	98,0	99,1	188,6	373,7	436,6	394,1
404,0	4,3	0,1	9,7	373,4	80,8	97,9	99,3	188,8	374,0	436,5	393,5
405,0	4,2	0,1	10,0	376,9	80,8	98,5	99,8	189,0	373,0	436,2	392,8
406,0	4,1	0,1	10,0	381,5	81,3	99,2	100,6	189,6	373,9	436,3	391,8
407,0	4,0	0,1	10,1	384,6	80,9	98,5	100,1	191,4	373,2	435,8	392,4
408,0	3,9	0,1	10,1	386,8	81,0	99,1	100,4	192,1	372,8	436,0	392,3
409,0	3,8	0,1	10,0	388,9	81,2	98,7	100,9	192,7	374,0	436,3	391,9
410,0	3,7	0,1	10,0	388,9	81,5	98,7	101,0	193,5	375,2	436,9	391,7
411,0	3,7	0,1	9,8	388,4	81,2	99,0	101,6	194,5	375,6	436,8	391,8
412,0	3,6	0,1	9,6	386,9	81,2	98,7	101,9	195,4	375,0	436,9	391,5
413,0	3,5	0,1	9,5	384,9	81,4	99,5	101,6	196,2	375,0	436,9	391,8
414,0	3,5	0,1	9,4	380,8	81,1	99,1	101,5	196,3	375,8	437,2	391,9
415,0	3,4	0,1	9,1	375,3	81,0	99,2	101,2	196,2	375,6	437,2	391,8
416,0	3,4	0,1	8,7	367,0	80,9	98,3	101,4	196,9	375,7	437,4	391,6
417,0	3,3	0,1	8,1	357,5	81,1	97,0	101,2	197,5	375,0	436,6	391,6
418,0	3,2	0,1	7,7	347,8	81,1	97,1	100,5	197,5	376,2	436,4	392,0
419,0	3,2	0,1	7,0	337,6	81,1	96,4	99,0	196,6	376,1	435,7	391,9
420,0	3,2	0,2	6,5	328,0	81,0	96,0	99,9	196,1	375,9	434,0	392,1
421,0	3,1	0,3	6,2	319,7	80,9	95,6	99,2	195,1	375,1	432,1	392,4
422,0	3,1	0,4	5,9	312,4	81,0	95,1	98,0	193,8	374,4	429,7	392,4
423,0	3,1	0,5	5,6	305,5	80,6	94,7	97,3	192,7	374,2	427,1	393,0
424,0	3,1	0,9	5,2	298,0	81,2	94,5	97,0	191,6	373,2	423,8	393,5
425,0	3,1	0,9	5,1	291,5	81,0	94,3	96,4	191,4	372,8	420,4	394,4
426,0	3,0	1,0	5,0	285,9	81,3	94,1	96,0	190,6	370,9	416,8	394,8
427,0	3,0	1,0	4,9	280,6	81,1	93,7	94,9	189,6	369,9	413,3	394,9
428,0	3,0	1,1	4,6	276,3	80,6	93,6	94,7	188,8	368,6	409,9	394,9
429,0	3,0	1,1	4,7	272,2	81,0	93,3	94,3	188,0	367,7	406,7	394,6
430,0	2,9	1,1	4,6	268,3	80,4	93,1	94,4	187,2	366,9	403,5	394,7
431,0	2,9	1,1	4,7	265,5	80,9	93,1	94,3	186,5	365,1	399,7	395,4
432,0	2,9	1,1	4,7	262,2	80,5	92,8	93,9	185,7	363,2	396,6	395,1
433,0	2,9	1,1	4,7	259,8	80,6	92,6	93,9	185,4	363,2	393,8	395,0
434,0	2,9	1,1	4,7	257,0	80,6	92,4	93,8	184,6	361,1	390,4	394,4
435,0	2,9	1,1	4,5	254,3	80,6	92,5	93,5	184,2	358,3	386,5	394,4
436,0	2,9	1,0	4,5	251,8	80,9	92,1	93,3	183,6	357,0	383,5	394,2
437,0	2,8	1,1	4,6	249,3	80,9	91,9	92,9	183,1	355,3	379,9	394,0
438,0	2,8	1,0	4,6	247,3	80,5	91,8	93,1	182,5	355,6	377,0	393,8
439,0	2,8	1,1	4,6	245,1	80,7	91,8	92,7	182,3	352,0	374,2	392,7
440,0	2,8	1,1	4,6	243,8	80,4	91,3	92,6	182,1	350,1	371,1	392,0
441,0	2,7	1,1	4,7	242,2	80,8	91,4	92,3	181,3	348,9	368,3	391,2
442,0	2,7	1,1	4,7	241,1	80,5	91,5	92,1	180,7	347,7	365,8	390,4
443,0	2,7	1,1	4,8	240,0	80,3	91,3	91,6	180,7	345,7	362,5	389,5
444,0	2,7	1,1	4,7	238,3	80,8	91,2	92,2	180,3	343,7	360,1	388,3
445,0	2,6	1,1	4,8	237,4	80,9	91,0	92,1	180,2	343,2	357,6	387,3
446,0	2,6	1,1	4,8	236,2	80,4	90,9	92,4	180,1	340,6	355,0	386,2
447,0	2,6	1,1	4,8	235,2	80,5	91,0	91,5	179,6	340,1	352,9	384,8
448,0	2,6	1,1	4,8	234,1	80,5	90,9	91,5	179,4	338,8	351,4	383,5
449,0	2,6	1,1	4,8	232,5	80,6	90,8	91,6	179,2	337,0	349,4	382,3
450,0	2,6	1,1	4,5	231,2	80,4	90,6	91,4	179,2	336,2	347,7	381,1
451,0	2,6	1,1	4,5	230,5	80,7	90,6	90,6	179,2	334,5	344,8	380,7
452,0	2,6	1,1	4,5	229,0	80,4	90,5	90,1	179,1	333,3	343,9	378,9
453,0	2,5	1,1	4,5	227,9	79,9	90,5	90,4	179,1	331,8	342,2	377,4
454,0	2,6	1,1	4,5	226,8	80,5	90,5	90,8	179,4	331,1	340,2	376,0
455,0	2,5	1,1	4,5	225,5	80,6	90,4	90,6	179,1	330,6	339,3	374,0
456,0	2,6	1,1	4,5	225,1	80,3	90,1	90,7	179,1	328,5	337,6	372,8
457,0	2,5	1,1	4,5	224,0	80,0	90,2	90,8	179,3	326,8	335,9	371,7
458,0	2,5	1,1	4,5	223,1	80,4	90,0	90,6	179,3	326,6	334,2	370,8
459,0	2,5	1,1	4,5	221,8	79,9	90,1	90,0	179,4	324,8	333,2	369,3
460,0	2,5	1,0	4,4	221,3	79,8	90,0	89,8	179,3	323,6	331,1	368,6
461,0	2,5	1,0	4,4	220,5	80,2	90,0	90,2	179,3	322,5	331,1	366,7
462,0	2,5	1,0	4,4	219,3	80,1	89,9	90,6	179,2	321,2	328,9	366,2
463,0	2,4	1,0	4,4	218,7	80,2	89,7	90,8	179,2	318,4	327,8	365,2
464,0	2,4	1,0	4,3	217,5	80,5	89,9	91,1	179,5	318,0	326,1	364,6
465,0	2,4	1,1	4,4	217,4	80,4	89,8	90,6	179,3	317,3	324,8	363,6
466,0	2,4	1,1	4,3	217,3	80,5	89,7	90,3	179,5	315,8	323,9	362,5
467,0	2,4	1,1	4,4	217,2	80,5	89,7	90,3	179,7	315,0	323,4	361,2
468,0	2,4	1,1	4,4	216,6	80,4	89,7	90,8	179,8	313,9	322,4	360,2
469,0	2,3	1,1	4,3	215,8	80,5	89,7	90,9	179,9	312,2	320,9	358,9
470,0	2,3	1,1	4,3	215,0	80,5	89,6	91,3	180,0	311,7	320,1	358,1
471,0	2,3	1,1	4,3	214,0	80,3	89,5	91,0	180,2	309,7	319,2	357,3
472,0	2,3	1,1	4,3	213,2	80,5	89,3	91,4	180,1	307,9	319,0	355,4
473,0	2,3	1,1	4,2	212,9	80,6	89,4	91,0	180,2	306,8	317,2	355,4
474,0	2,3	1,1	4,3	212,7	80,5	89,1	90,8	180,1	305,9	316,5	353,9
475,0	2,2	1,1	4,3	212,1	80,5	89,4	90,8	180,5	304,1	315,8	352,8
476,0	2,2	1,1	4,2	211,4	80,4	89,3	91,2	180,4	303,1	315,1	351,8
477,0	2,2	1,1	4,1	210,4	80,6	89,2	90,7	180,3	303,3	314,6	350,6
478,0	2,2	1,1	4,1	209,3	80,5	89,2	91,8	180,1	301,5	313,8	349,3
479,0	2,1	1,0	4,0	208,8	80,6	89,0	91,2	180,2	300,1	312,8	348,8
480,0	2,1	1,0	3,9	207,7	80,4	89,1	91,6	180,3	299,3	311,6	348,3
481,0	2,1	1,0	4,0	206,8	80,5	89,1	91,0	179,9	298,1	311,1	347,1
482,0	2,1	1,1	4,0	206,1	80,2	88,9	90,6	180,0	297,5	311,1	345,6
483,0	2,1	1,1	3,9	205,1	80,2	88,9	89,6	180,1	296,4	309,3	345,0
484,0	2,1	1,0	3,9	204,2	80,2	89,0	89,2	179,9	296,3	308,9	343,9
485,0	2,1	1,1	3,9	203,2	80,1	88,8	89,0	179,9	294,8	308,6	342,4
486,0	2,0	1,1	3,9	202,7	80,0	88,8	89,9	180,0	293,8	307,7	341,6
487,0	2,0	1,0	3,8	202,0	80,4	88,8	90,4	180,0	293,0	306,6	290,5
488,0	2,0	1,0	3,8	201,1	80,0	88,8	90,0	180,2	291,1	305,3	339,9
489,0	2,0	1,0	3,8	200,3	80,3	88,8	90,8	179,9	290,3	304,5	338,7
490,0	2,0	1,0	3,8	199,8	80,4	88,6	91,2	179,9	289,7	303,6	337,9
491,0	2,0	1,0	3,7	199,0	80,2	88,7	91,0	180,3	288,6	302,5	337,1
492,0	2,0	1,1	3,8	198,2	80,5	88,7	91,1	180,1	287,3	301,3	336,6
493,0	2,0	1,1	3,7	197,4	80,4	88,5	90,8	180,3	286,9	300,1	335,9
494,0	2,0	1,1	3,7	196,5	80,2	88,7	90,6	180,4	285,9	299,2	335,1
495,0	1,9	1,1	3,7	196,0	80,0	88,6	90,3	180,5	285,2	297,9	334,2
496,0	1,9	1,1	3,7	195,6	80,2	88,6	91,5	180,5	284,1	296,7	333,5
497,0	1,9	1,0	3,7	194,8	80,3	88,6	90,7	180,8	283,2	296,4	332,0
498,0	1,9	1,0	3,5	193,8	80,2	88,6	90,9	180,8	283,2	295,8	330,8
499,0	1,9	1,0	3,6	193,0	80,3	88,6	90,2	180,9	282,2	294,6	329,9
500,0	1,9	1,0	3,5	192,3	80,2	88,6	89,8	181,2	280,8	293,8	327,9
501,0	1,9	1,0	3,5	191,5	80,1	88,4	89,4	181,0	280,8	292,3	326,8

502,0	1,9	1,0	3,5	190,8	80,0	88,5	89,0	180,9	279,7	291,5	325,9
503,0	1,8	1,0	3,5	189,8	80,3	88,5	89,6	180,9	278,7	290,2	325,2
504,0	1,8	1,0	3,4	189,4	80,3	88,4	89,8	181,0	278,9	289,7	324,1
505,0	1,8	1,0	3,5	189,0	80,4	88,5	89,5	181,2	277,3	288,7	322,8
506,0	1,8	1,0	3,5	188,2	80,4	88,3	90,3	181,4	276,4	287,4	322,4
507,0	1,8	1,0	3,5	187,6	80,4	88,4	90,5	181,3	276,3	286,6	321,3
508,0	1,8	1,0	3,5	187,3	80,4	88,3	91,2	181,6	275,4	285,3	320,8
509,0	1,7	1,0	3,4	186,9	80,4	88,3	91,1	181,5	274,9	284,2	320,5
510,0	1,7	1,0	3,5	186,3	80,6	88,3	90,1	181,9	273,9	283,8	319,2
511,0	1,7	1,0	3,4	185,9	80,0	88,2	90,3	182,1	273,1	283,1	318,4
512,0	1,7	1,0	3,4	185,4	80,7	88,2	90,4	181,6	273,6	283,2	316,1
513,0	1,7	1,0	3,4	185,0	80,4	88,2	91,6	181,8	271,9	282,5	314,7
514,0	1,7	1,0	3,5	184,7	80,2	88,2	91,7	182,1	271,2	281,0	314,3
515,0	1,7	1,0	3,5	184,3	80,6	88,2	90,4	182,2	269,9	280,3	313,4
516,0	1,6	1,0	3,5	183,8	80,5	88,3	91,0	182,5	269,1	278,7	313,4
517,0	1,6	1,0	3,5	183,6	80,4	88,1	90,5	182,6	268,4	278,8	311,8
518,0	1,6	1,0	3,5	183,3	80,5	88,1	90,7	182,6	268,6	278,2	311,3
519,0	1,6	1,0	3,5	182,9	80,1	88,1	91,8	182,9	266,7	276,9	310,8
520,0	1,6	1,0	3,5	182,7	80,3	88,1	89,4	183,1	266,0	276,3	309,8
521,0	1,6	1,0	3,5	182,5	80,0	88,1	90,2	182,9	265,4	275,7	309,5
522,0	1,6	1,0	3,4	181,8	80,4	88,1	90,2	183,0	265,8	275,7	308,1
523,0	1,6	1,0	3,4	181,1	80,4	88,1	91,1	183,5	263,6	274,2	308,3
524,0	1,6	1,0	3,4	180,6	80,3	88,0	90,0	183,7	263,7	273,3	308,2
525,0	1,5	1,0	3,4	180,0	80,3	88,0	88,0	183,3	262,6	272,5	307,8
526,0	1,5	1,0	3,4	179,3	80,4	88,1	87,8	183,4	262,0	272,0	306,8
527,0	1,5	1,0	3,4	178,9	80,3	87,9	88,4	183,4	261,2	271,5	306,4
528,0	1,5	1,0	3,4	178,4	80,2	87,8	88,4	183,5	260,8	271,0	305,3
529,0	1,5	1,0	3,4	177,9	80,2	87,9	87,3	183,9	260,7	270,6	304,5
530,0	1,5	1,0	3,4	177,6	80,2	87,9	88,0	184,0	259,5	270,0	303,8
531,0	1,5	1,0	3,4	176,9	80,2	87,9	87,7	184,0	259,6	269,3	303,4
532,0	1,5	1,0	3,4	176,4	80,3	87,9	88,1	184,1	258,7	268,6	302,7
533,0	1,5	1,0	3,4	176,3	80,2	87,9	86,8	184,3	257,9	268,2	302,4
534,0	1,5	1,0	3,4	176,2	80,3	87,9	87,3	184,5	257,1	267,5	302,3
535,0	1,5	1,0	3,4	175,8	80,2	87,9	87,4	184,5	257,3	267,1	301,1
536,0	1,5	1,0	3,4	175,5	80,1	87,9	87,2	184,5	257,0	266,0	300,8
537,0	1,4	1,0	3,4	175,1	80,2	87,8	87,7	184,7	256,8	265,8	300,4
538,0	1,5	1,0	3,4	174,8	80,3	87,8	87,5	184,8	255,6	265,1	300,0
539,0	1,4	1,0	3,4	174,4	80,1	87,9	88,3	185,5	254,9	264,1	299,8
540,0	1,4	1,0	3,5	174,2	80,1	87,9	89,1	185,5	254,9	263,7	299,2
541,0	1,4	1,0	3,4	173,7	80,0	87,8	89,6	185,6	254,9	263,4	298,6
542,0	1,4	1,0	3,5	173,4	80,0	87,8	88,6	185,8	254,5	262,9	297,0
543,0	1,4	1,0	3,5	173,2	80,1	87,8	89,3	186,3	254,3	262,1	296,6
544,0	1,3	1,0	3,5	173,3	80,2	87,8	88,9	186,7	253,9	261,6	296,1
545,0	1,3	1,0	3,6	173,0	80,2	87,8	89,3	187,0	253,7	261,1	295,9
546,0	1,3	1,0	3,6	173,0	80,2	87,8	89,3	187,4	253,7	260,3	296,0
547,0	1,3	1,0	3,5	172,9	80,2	87,6	89,5	187,7	254,0	259,5	296,3
548,0	1,3	1,0	3,6	173,0	80,2	87,7	89,8	188,2	253,7	259,1	295,9
549,0	1,3	1,0	3,6	172,9	80,3	87,7	89,6	188,7	253,4	257,8	296,1
550,0	1,3	1,0	3,6	172,9	80,0	87,6	89,4	189,1	254,1	257,6	295,7
551,0	1,3	1,0	3,6	172,7	80,1	87,7	90,3	189,4	253,0	257,2	295,1
552,0	1,2	1,0	3,7	173,0	80,2	87,7	90,7	189,7	253,3	256,5	295,4
553,0	1,2	1,0	3,8	173,2	80,1	87,7	90,6	190,6	252,8	255,8	295,1
554,0	1,2	1,0	3,8	173,5	80,3	87,7	90,8	191,2	252,1	255,2	295,0
555,0	1,2	1,0	3,8	173,7	80,3	87,7	90,3	191,9	251,8	254,7	294,6
556,0	1,2	1,0	3,9	174,1	80,2	87,8	90,1	192,8	251,9	254,2	294,4
557,0	1,2	1,0	3,9	174,2	80,1	87,7	90,2	193,5	251,5	254,0	293,9
558,0	1,2	0,9	3,9	174,3	80,3	87,7	90,0	194,1	251,2	253,7	293,3
559,0	1,2	0,9	3,9	174,5	80,3	87,8	90,3	194,8	252,5	253,6	293,9
560,0	1,2	0,9	4,0	174,5	80,2	87,7	91,2	195,7	251,8	253,5	293,3
561,0	1,2	0,9	4,0	174,9	80,2	87,8	91,0	196,6	251,4	253,2	294,1
562,0	1,1	0,9	4,1	175,1	80,2	87,7	91,4	197,4	251,4	253,1	293,5
563,0	1,1	0,9	4,1	175,7	80,3	87,8	90,8	198,6	250,7	252,9	293,8
564,0	1,0	0,9	4,1	176,1	80,3	87,7	92,0	199,4	250,3	252,8	294,2
565,0	1,1	0,9	4,1	176,3	80,1	87,8	92,7	200,3	250,5	253,0	294,2
566,0	1,1	0,9	4,1	176,8	80,3	87,8	93,1	201,3	250,5	253,6	293,6
567,0	1,0	0,9	4,1	177,3	80,2	87,8	92,8	202,3	250,0	253,9	293,2
568,0	1,0	0,9	4,1	178,1	80,4	87,8	91,2	203,4	249,7	254,2	293,0
569,0	1,1	0,9	4,1	178,6	80,2	87,8	92,0	205,0	249,4	254,4	293,5
570,0	1,0	0,9	4,1	178,9	80,4	87,8	92,4	206,1	248,9	254,6	294,1
571,0	1,0	0,9	4,1	178,9	80,2	87,8	91,3	206,6	249,8	255,7	293,7
572,0	1,0	0,9	4,1	179,0	80,1	87,8	91,4	208,0	248,7	256,1	293,4
573,0	1,0	0,9	4,0	179,1	80,3	87,8	92,5	208,9	249,1	256,9	293,6
574,0	0,9	0,9	4,0	179,0	80,3	87,9	91,4	210,2	248,1	257,1	293,7
575,0	0,9	0,9	4,0	179,2	80,2	87,7	91,6	210,7	248,5	258,0	293,6
576,0	0,9	0,9	4,0	179,1	80,2	87,8	92,8	211,5	247,9	258,6	293,6
577,0	0,9	0,8	3,9	178,3	80,4	87,8	92,3	212,0	247,5	259,0	293,8
578,0	0,9	0,8	3,7	178,0	80,3	87,7	91,8	212,2	248,0	259,7	293,9
579,0	0,9	0,7	3,8	178,1	80,4	87,6	90,6	212,3	247,2	259,7	293,2
580,0	0,8	0,7	3,8	178,4	80,5	87,7	90,1	212,7	248,7	260,7	293,2
581,0	0,8	0,7	3,9	178,9	80,5	87,8	89,5	213,4	246,5	260,6	293,8
582,0	0,8	0,7	3,9	179,0	80,5	87,7	89,4	214,1	246,4	260,8	294,0
583,0	0,8	0,7	3,9	178,9	80,4	87,8	88,9	214,8	246,4	261,4	294,4
584,0	0,8	0,7	3,9	178,8	80,6	87,7	89,1	215,1	246,3	261,6	295,1
585,0	0,8	0,7	3,9	178,4	80,5	87,7	89,2	215,4	246,5	262,0	295,3
586,0	0,8	0,8	4,0	178,0	80,6	87,7	89,8	215,4	246,0	262,4	226,9
587,0	0,8	0,7	4,0	178,2	80,6	87,7	90,1	215,9	245,9	262,7	295,9
588,0	0,8	0,7	3,9	178,2	80,5	87,7	91,0	216,4	245,6	263,0	296,3
589,0	0,8	0,8	4,0	178,6	80,4	87,7	90,4	216,4	245,5	263,4	295,8
590,0	0,7	0,8	4,0	178,6	80,6	87,7	90,6	216,4	245,9	263,8	295,6
591,0	0,8	0,8	4,0	178,8	80,6	87,6	90,1	216,3	244,8	264,1	295,6
592,0	0,7	0,8	3,8	179,1	80,7	87,6	90,6	216,4	244,2	264,4	295,2
593,0	0,7	0,8	3,9	178,6	80,6	87,6	90,9	216,8	244,6	264,4	295,8
594,0	0,7	0,8	3,9	179,1	80,7	87,6	92,2	216,8	244,4	264,3	296,7
595,0	0,7	0,8	4,0	179,3	80,5	87,7	92,7	217,0	244,0	264,6	296,8
596,0	0,7	0,8	4,0	179,2	80,7	87,6	91,5	217,7	243,2	264,4	297,5
597,0	0,7	0,8	3,9	179,0	80,6	87,6	92,8	218,4	242,6	264,4	298,0
598,0	0,7	0,8	3,9	179,0	80,7	87,6	92,1	218,0	243,0	264,8	297,4
599,0	0,6	0,8	3,9	179,2	80,6	87,6	92,5	218,0	242,4	264,8	297,4
600,0	0,6	0,8	4,0	179,4	80,7	87,6	91,6	218,0	242,4	264,8	297,7
601,0	0,6	0,8	4,0	179,4	80,7	87,6	92,7	217,9	241,7	265,0	297,6
602,0	0,6	0,9	4,0	179,3	80,7	87,6	92,9	217,6	241,5	264,9	297,6

603,0	0,6	0,8	4,0	179,6	81,0	87,6	93,2	217,6	241,2	265,4	297,7
604,0	0,5	0,8	4,0	179,3	80,9	87,6	94,4	217,6	240,9	265,2	297,9
605,0	0,6	0,8	4,0	179,8	80,6	87,6	93,6	217,5	240,7	265,6	298,3
606,0	0,5	0,8	3,9	179,5	80,8	87,6	92,2	217,3	240,5	265,7	298,9
607,0	0,5	0,8	3,9	179,2	80,7	87,6	94,2	217,4	240,2	265,7	299,0
608,0	0,5	0,9	3,9	179,2	80,7	87,6	93,6	217,3	240,0	265,7	299,0
609,0	0,5	0,9	4,0	179,2	80,7	87,6	95,5	217,3	239,4	265,9	298,9
610,0	0,5	0,8	3,9	179,1	80,7	87,5	94,1	217,4	239,3	265,7	299,4
611,0	0,5	0,8	3,9	179,3	80,6	87,5	96,7	217,2	239,8	266,1	299,2
612,0	0,5	0,8	3,9	179,3	80,7	87,5	94,5	217,4	238,7	265,8	299,7
613,0	0,5	0,8	3,9	179,2	80,7	87,4	97,2	217,7	238,4	265,9	300,5
614,0	0,4	0,8	3,9	179,1	80,7	87,5	97,1	217,4	238,3	265,8	301,3
615,0	0,4	0,8	3,9	179,2	80,7	87,4	96,8	217,1	238,2	266,0	301,0
616,0	0,4	0,8	3,9	179,2	80,7	87,5	95,9	217,1	238,2	266,2	301,3
617,0	0,4	0,8	3,8	179,0	80,7	87,4	95,7	216,9	237,5	265,9	301,4
618,0	0,4	0,8	3,8	178,7	80,7	87,3	94,0	217,2	237,3	266,1	301,6
619,0	0,3	0,8	3,8	178,7	80,7	87,4	96,0	216,7	237,3	266,1	301,1
620,0	0,3	0,8	3,8	178,5	80,6	87,4	95,3	216,7	236,9	265,9	301,4
621,0	0,3	0,8	3,8	178,0	80,7	87,3	94,4	216,4	237,0	266,7	300,5
622,0	0,3	0,8	3,8	177,4	80,6	87,3	96,6	216,2	236,5	266,4	300,5
623,0	0,3	0,8	3,8	177,5	80,6	87,3	96,2	215,9	236,2	266,2	300,9
624,0	0,3	0,8	3,8	177,2	80,6	87,3	95,1	215,8	236,1	266,3	301,0
625,0	0,3	0,8	3,8	177,0	80,5	87,3	95,9	215,7	236,2	266,4	301,0
626,0	0,3	0,8	3,7	176,5	80,7	87,2	95,9	215,6	235,9	266,1	301,7
627,0	0,3	0,8	3,8	176,4	80,7	87,3	95,5	215,5	235,8	266,0	301,8
628,0	0,2	0,8	3,8	176,4	80,8	87,3	95,8	215,2	235,4	266,0	302,0
629,0	0,2	0,8	3,7	176,2	80,8	87,2	95,5	215,0	234,9	265,7	301,7
630,0	0,2	0,8	3,7	175,7	80,7	87,3	96,2	214,8	235,5	266,0	301,7
631,0	0,3	0,8	3,6	175,4	80,8	87,1	96,4	214,8	234,4	265,7	301,9
632,0	0,2	0,8	3,6	175,3	80,8	87,1	95,8	215,0	235,0	265,5	302,2
633,0	0,2	0,8	3,6	174,9	80,8	87,1	95,8	214,8	234,6	265,4	302,4
634,0	0,2	0,8	3,6	174,5	80,7	87,1	94,7	214,1	234,7	265,5	301,7
635,0	0,2	0,8	3,6	174,5	80,8	87,1	95,3	213,6	234,1	265,6	301,4
636,0	0,2	0,8	3,6	174,2	80,8	87,1	95,0	213,3	234,2	265,2	301,9
637,0	0,2	0,8	3,4	173,6	80,7	87,0	95,3	212,9	233,9	264,8	302,0
638,0	0,1	0,8	3,3	172,7	80,7	87,0	95,1	212,6	233,7	264,5	301,6
639,0	0,2	0,8	3,4	172,2	80,7	87,0	93,4	212,2	233,7	264,4	301,3
640,0	0,1	0,8	3,4	171,8	80,7	86,9	92,5	211,6	233,6	263,9	298,7
641,0	0,1	0,8	3,4	171,4	80,8	87,0	95,0	211,3	233,2	263,5	301,8
642,0	0,1	0,8	3,4	170,9	80,7	86,9	94,4	211,1	233,2	263,5	301,8
643,0	0,1	0,8	3,4	170,7	80,7	86,9	94,0	210,7	233,0	263,2	301,4
644,0	0,1	0,8	3,3	170,1	80,7	86,8	95,3	210,4	232,7	262,6	301,8
645,0	0,1	0,8	3,3	169,7	80,7	86,8	95,4	210,2	232,5	262,5	301,7
646,0	0,1	0,8	3,3	169,2	80,5	86,8	94,4	210,1	231,8	261,8	301,4
647,0	0,1	0,8	3,4	169,1	80,5	86,8	94,3	209,9	232,1	261,6	301,3
648,0	0,1	0,8	3,3	169,0	80,6	86,7	95,4	209,8	231,5	261,1	301,1
649,0	0,1	0,8	3,2	168,8	80,6	86,7	94,5	209,1	231,9	261,1	300,7
650,0	0,1	0,8	3,3	168,6	80,6	86,6	95,0	208,7	230,9	260,0	301,2
651,0	0,1	0,8	3,3	168,2	80,6	86,7	92,3	208,0	230,7	259,8	300,8
652,0	0,1	0,8	3,2	167,9	80,6	86,6	93,2	207,6	230,5	259,3	300,8
653,0	0,1	0,8	3,3	167,3	80,7	86,6	94,5	207,2	230,0	258,8	300,9
654,0	0,0	0,8	3,2	167,1	80,8	86,5	94,6	206,7	229,8	258,3	300,8

Manufacturer: IHP
Model: IRON STRIKE

Run: 1
Project #: PI 20165
Test Duration: 349 min

	HHV	LHV
Eff	64,15%	69,02%
Comb Eff	98,20%	98,20%
HT Eff	65,32%	70,29%
Output	44 880	kJ/h
Burn Rate	3,46	kg/h
Grams CO	154	g
Input	69 967	kJ/h
MC wet	19,51	

Note: In the “Input data”, "Calc. % O_2", "Fuel Properties", and “Mass Balance” columns, [e], [d], [g], [a]. [b], [c], [h], [u], [w], [j], and [k] refer to their respective variables in Clauses 13.7.3

	Ultimate CO_2
$CO_{2\text{-}ult}$	19,86
	F_0
	1,049

Overall Heating Efficiency:	64,15%	
Combustion Efficiency:	98,20%	
Heat Transfer Efficiency:	65,32%	

Air Fuel Ratio (A/F)	
Dry Molecular Weight (M_d)	29,79
Dry Moles Exhaust Gas (N_r):	439,44
Air Fuel Ratio (A/F)	12,58

Heat Output:	42 574	Btu/h	44 880	kJ/h
Heat Input:	66 371	Btu/h	69 967	kJ/h
Burn Duration:	1,45	h		
Burn Rate:	7,63	lb/h	3,462	kg/h
Stack Temp:	592,0	Deg. F	311,1	Deg. C

Manufacturer: IHP
Model: IRON STRIKE

Run: 1
Project #: PI 20165
Test Duration: 349 min

	HHV	LHV
Eff	71,72%	77,17%
Comb Eff	95,46%	95,46%
HT Eff	75,13%	80,84%
Output	17 389	kJ/h
Burn Rate	1,20	kg/h
Grams CO	468	g
Input	24 246	kJ/h
MC wet	17,75	

Note: In the “Input data”, "Calc. % O_2", "Fuel Properties", and “Mass Balance” columns, [e], [d], [g], [a]. [b], [c], [h], [u], [w], [j], and [k] refer to their respective variables in Clauses 13.7.3

Ultimate CO_2
$CO_{2\text{-ult}}$ 19,86
F_0
1,049

Overall Heating Efficiency:	71,72%	Air Fuel Ratio (A/F)		
Combustion Efficiency:	95,46%	Dry Molecular Weight (M_d)	29,57	
Heat Transfer Efficiency:	75,13%	Dry Moles Exhaust Gas (N_r):	506,99	
		Air Fuel Ratio (A/F)	14,48	

Heat Output:	16 496	Btu/h	17 389	kJ/h
Heat Input:	23 000	Btu/h	24 246	kJ/h
Burn Duration:	5,82	h		
Burn Rate:	2,64	lb/h	1,200	kg/h
Stack Temp:	290,7	Deg. F	143,7	Deg. C

POLYTESTS
TESTING THROUGH YOUR REALITY

Date: 2018-05-23 Manufacturer: IHP Model: Iron strike
Project #: PI 20165 Run: 1 Tech: MM Reviewer: SP

- Start Fire 1 minute torche
- close Door immediatly
- Fan off
- At 2.5 LBS insert load (High)
- close Door immediatly
- At 16 LBS open Fan
- At 3.9 LBS stop pompe
- At 3.8 LBS close Fan
- At 2.00 LBS insert load (low)
- At 900 °F close air inlet (motion) 1/2
- At 10 minute close air inlet 3/4
- At 15 minute close air inlet completement
- At 26 minute open Fan

TEST LOAD CONFIGURATION

POLYTESTS
TESTING THROUGH YOUR REALITY

PRE / POST CHECKS

Date: 2018-05-23 Manufacturer: IHP Model: NON STAKE

Project #: PJ 2065 Run: 1 Tech: MS Reviewer: SP

Moisture Meter Calibration Check:	Equipment #	Time	12%	22%
	EM 191	7:00	ok	ok

	Pre-Test		Post-Test	
Facility Conditions:				
Air Velocity from less than 2 feet	4	(max50 Fpm)	15	(max50 Fpm)
Smoke Capture Check	ok		ok	
Picture (4 sides)	ok		ok	
Wood Heater Conditions:				
Date Wood Heater Stack Cleaned	2018-05-23			
Date Dilution Tunnel Cleaned	2018-05-23			
Induced Draft Check (max 0.005 H2O)	ok			
Traverse before ignition	ok			
Temperature System:				
Ambient (65°-90°F)	ok	°F		
Proportional Checks:				
Thermocouple check	ok			
Pitot Clean	ok			
Pitot verification	ok			

Sampling Train ID Numbers:

	High fire test			Medium low fire test		
	1st hour	Train 1	Train 2	1st hour	Train 1	Train 2
Probe	09	13	39	07	11	41
Filter Front	114	116	118	121	123	125
Filter Back	115	117	119	122	124	126
Filter Thermocouple	~~12~~ 11	11	12	11	11	12
Filter (80°F ≥ <90°F)	ok	ok	ok	ok	ok	ok

POLYTESTS
TESTING THROUGH YOUR REALITY

SAMPLING EQUIPMENT CHECK OUT

Date: 2018-05-23 Manufacturer: IAP Model: Iron Strike

Project #: pT 2-165 Run: 1 Tech: MM Reviewer: DP

Leakage Checks Tunnel Samplers

High fire test	System 1st hour		System 1		System 2	
Unplugged Flow Rate = .25cfm	Pre-Test ASTM (-15) CSA B415 (-5)	Post-Test (max test)	Pre-Test ASTM (-15) CSA B415 (-5)	Post-Test (Max test)	Pre-Test ASTM (-15) CSA B415 (-5)	Post-Test (Max test)
Vacuum (inches Hg.)	-15	-15	-15	-15	-15	-15
Final 1minute DGM (Liter)	675848,84	676355,31	675848,90	676355,42	628134,28	628659,77
Initial 1minute DGM (Liter)	675848,82	676355,30	675848,88	676355,41	628134,27	628659,74
Change © (Liter)	0,02	0,01	0,02	0,01 ~~0,02~~ MM	0,01	0,03
Allowable leakage .04 x Sample rate or 0.28Lpm CSA B415 (0.56)						
Check OK	ok	ok	ok	ok	ok	ok

Low medium fire test	System 1st hour		System 1		System 2	
Unplugged Flow Rate = .25cfm	Pre-Test ASTM (-15) CSA B415 (-5)	Post-Test (max test)	Pre-Test ASTM (-15) CSA B415 (-5)	Post-Test (Max test)	Pre-Test ASTM (-15) CSA B415 (-5)	Post-Test (Max test)
Vacuum (inches Hg.)	-15	-15	-15	-15	-15	-15
Final 1minute DGM (Liter)	676356,16	678080,01	676356,23	678080,06	628660,74	630428,30
Initial 1minute DGM (Liter)	676356,13	678080,00	676356,22	678080,05	628660,73	630428,30 ~~43~~ MM
Change © (Liter)	0,03	0,01	0,01	0,01	0,01	∅
Allowable leakage .04 x Sample rate or 0.28Lpm CSA B415 (0.56)						
Check OK	ok	ok	ok	ok	ok	ok

POLYTESTS
TESTING THROUGH YOUR REALITY

SAMPLING EQUIPMENT CHECK OUT

Date: 2018-05-23 Manufacturer: JHP Model: Iron Strike

Project #: ~~PT-286~~ PT 20165 Run: 1 Tech: MM Reviewer: DS

Leakage Checks Flue Gas Sampler

Plugged Probe	Pre-Test	Post Test
Vacuum (inches Hg.)	-5	-5
Rotameter Reading (mml/min.)	0	0
Flow Rate (lpm)	1.5	1.5
Allowable (.02 x Sample Rate)	30	30
Check OK	ok	ok

Leakage Checks Pitot

Plugged Probe	Pre Test 3 H2o static	Pre Test 0.4-0.5 H2o velocity	Post Test 3 H2o Static	Post Test 0.4-0.5 H2o velocity
Vacuum (inches Hg.)	3	.4	3	.4
Check OK (no change after 15 sec.)	ok	ok	ok	ok

POLYTESTS
TESTING THROUGH YOUR REALITY

PRE-TEST SCALE AUDIT

Date: 2018-05-23 Manufacturer: IAP Model: IRON SNAKE

Project #: PT 2165 Run: 1 Tech: MM Reviewer: NP

Scale Type	Audit		Measured Weight
	Equipment #	Weight	
Platform	EM 090	44 lbs, Class F	44 lbs
Wood	EM 090	44 lbs, Class F	44 lbs
Analytical	EM 128	100 mg, Class S	100 mg
Analytical	EM 129	200 g, Class S	200 g

LIMITS OF WEIGHT RANGES

ANALYTICAL SCALE: ..... 50%-150% of dry filter weight, ± 0.1 mg
PLATFORM SCALE ..... 20%-80% of ideal test load weight, ± 0.1 lbs or 1%
WOOD SCALE ..... 20%-80% of ideal test load weight, ± 0.01 lbs or 1%

POLYTESTS
TESTING THROUGH YOUR REALITY

CONTINUOUS ANALYZERS

Date: 2018-05-~~0~~ 23 Manufacturer: IHP Model: IRON strike

Project #: PT 20165 Run: MM Tech: MM Reviewer: DP

FOR TUNNELS < 12 in

Barometric pressure (P_{bar}) 1008 (KPa.) Static pressure (P_q) 0.13 (inches w.c.)
Inside diameter: Port A _____ Port B _____.
Tunnel cross sectional area: .1963Ft^2
Pitot tube type: Standard

Traverse Point	Position (inches)			Velocity Head Δ_p (inches H_2O)	Tunnel Temperature (°F)
	6 po	7 po	8 po		
A- Centroid	3.00	3.50	4	0.050	74.70
B - Centroid	3.00	3.50	4	0.049	74.96
A-1	0.40	0.50	0.50	0.040	74.63
A-2	1.50	1.75	2	0.044	74.71
A-3	4.50	5.25	6	0.048	74.84
A-4	5.60	6.5	7.5	0.039	74.79
B-1	0.40	0.50	0.50	0.039	74.82
B-2	1.50	1.75	2	0.045	75.03
B-3	4.50	5.25	6	0.042	75.07
B-4	5.60	6.5	7.5	0.039	75.10
				AVERAGE	

$$v_s = K_p C_p (\sqrt{\Delta p})_{avg} \sqrt{\frac{(T_s)_{avg}}{P_s M_s}}$$

Where,
C_p = pitot tube coefficient, dimension less = 0.99 for standard pitot.
Δ_p = manometer reading (inches H_2O)
T_s = average absolute dilution tunnel temperature (°F + 460)
P_s = absolute dilution tunnel gas pressure or $P_{bar} + P_{qg}$
P_q = static pressure $\frac{\text{in. } H_2O}{\{13.6\}}$
M_s = 28.56, wet molecular weight of stack gas (alternatively, it may be measured)
K_p = 85.49 pitot tube constant, (conversion factor for English units)

_$\Delta_p$avg. = average of the square roots of the velocity heads (Δ_p) measured at each traverse point.

POLYTESTS
TESTING THROUGH YOUR REALITY

CONTINUOUS ANALYZERS

Date: 2018-05-23 Manufacturer: IA p Model: Iron Strike

Project #: PT 2-165 Run: 1 Tech: MM Reviewer: DP

Pre-Test (Adjust and Record)

	ZERO		SPAN		CAL. (Record Only)	
CO	0	0	18,050	18,00	0,997	1,00
Tolerance CO		+/- 0.02		+/- 0.15		+/- 0.05
CO_2	0	0	2,996	3,00	9,98	10,00
Tolerance CO2		+/- 0.02		+/- 0.5		+/- 0.5
O_2 informative CSA B415 calculated value	na	na	na	na	na	na
	Actual	Should Be	Actual	Should Be	Actual	Should Be

Post Test (Record Only)

	Zero	Span	Cal.	Zero Drift	Limit	Span Drift	Limit	Cal. Drift	Limit	OK?	Not OK*
CO	0	18,01	0,990	0	0.02	0,04	0.15	0,007	0.05	✓	
CO_2	0	2,999	9,90	0	0.02	0,003	0.5	0,08	0.5	✓	

POLYTESTS
TESTING THROUGH YOUR REALITY

TEST DATA LOG

Date: 2018-05-23 Manufacturer: IHP Model: Iron strike

Project #: PT 20165 Run: 1 Tech: mm Reviewer: BP

RAW DRY GAS METER READINGS

		System 1	System 2	Blank
High fire test	Final (Liter)	676354, 40	628658, 90	615, 25
	Initial (Liter)	675849, 06	628136, 30	606, 40
Low medium fire test	Final (Liter)	678079, 14	630427, 48	644, 35
	Initial (Liter)	676356, 36	628661, 65	615, 25

AMBIENT CONDITIONS

	Before	After
Barometer (kPa):	100,8	109,6
Dry Bulb (F):	75, 74	84, 74
Humidity (%):	45, 5	36, 40

POLYTESTS
TESTING THROUGH YOUR REALITY

FUEL DATA

Date: 2018-05-23 Manufacturer: IHP Model: NON STRIKE

Project #: pt 20165 Run: 1 Tech: MM Reviewer: DP

FUEL DESCRIPTION:

Type of wood:

KINDLING AND START-UP LOAD

Piece Size			Weight		Meter Moisture Content (% dry)				
x	x 16	in.	2 8 72	lbs.	93	9.00	9.3	9.2	9.4
x	x 16	in.	4 364	lbs.	19.1	20.3	20.6	20.5	20.4
x	x	in.		lbs.					
x	x	in.		lbs.					
x	x	in.		lbs.					
x	x	in.		lbs.					
x	x	in.		lbs.					
x	x	in.		lbs.					
x	x	in.		lbs.					

HIGHFIRE TEST LOAD

Piece Size			Weight		Meter Moisture Content (% dry)				
3.00	x 3.5 x 16	in.	3 17	lbs.	28.0	27.8	26.9	27.3	25.1
3.75	x 3.5 x 16	in.	3 144	lbs.	20.7	23.4	27.3	24.4	20.9
3.00	x 3.75 x 16	in.	3 21	lbs.	20.6	19.3	19.9	20.4	19.9
x	x	in.		lbs.					
4.00	x 3.75 x 16	in.	6 0 12	lbs.	26.3	27.9	24.8	25.3	26.8
x	x	in.		lbs.					
x	x	in.		lbs.					
x	x	in.		lbs.					
x	x	in.		lbs.					

POLYTESTS
TESTING THROUGH YOUR REALITY

FUEL DATA

Date: 2018-05-23 Manufacturer: IAP Model: IRON SNAKE

Project #: pT 2065 Run: 1 Tech: M M Reviewer: DP

FUEL DESCRIPTION:

Type of wood:

LOW OR MEDIUM TEST LOAD

Piece Size	Weight	Meter Moisture Content (% dry)				
350 x 3,5 x 16 in.	3 400 lbs.	27,5	26,8	25,8	26,0	26,9
325 x 350 x 16 in.	3 518 lbs.	20,7	23,3	27,4	21,3	19,4
300 x 375 x 16 in.	3 634 lbs.	19,1	19,6	20,1	19,4	19,3
x x in.	lbs.					
400 x 375 x 16 in.	5 188 lbs.	19,6	19,8	19,2	19,3	19,8
300 x 350 x 16 in.	2 962 lbs.	20,9	20,1	20,4	20,6	20,9
x x in.	lbs.					
x x in.	lbs.					
x x in.	lbs.					
x x in.	lbs.					
x x in.	lbs.					
x x in.	lbs.					
x x in.	lbs.					
x x in.	lbs.					

POLYTESTS
TESTING THROUGH YOUR REALITY

DILUTION TUNNEL PARTICULATE SAMPLER DATA

Date: 2018-05-22 Manufacturer: IHP Model: IRON STRIKE

Project #: pI 20165 Run: 1 Tech: MM Reviewer: DP

		HIGHFIRE TEST FILTERS								
		SYSTEM 1 – 1st hour				SYSTEM 1				
Pre-test Weight Record		Probe & Housing Number	Front Filter Number	Back Filter Number	gaskets	Probe & Housing Number	Front Filter Number	Back Filter Number	gaskets	Blanck
Date	Time	9	114	115	22	13	116	117	23	120
2018-05-22	17:00	61,4473	00835	00842	35,1537	95,1502	00825	00834	34,3036	00821
2018-05-23	9:00	61,4473	00835	00842	35,1537	95,1502	00825	00834	34,3036	00821

		SYSTEM 1 – 1st hour				SYSTEM 1				
Post-test Weight Record		Probe & Housing Number	Front Filter Number	Back Filter Number	gaskets	Probe & Housing Number	Front Filter Number	Back Filter Number	gaskets	Blanck
Date	Time	9	114	115	22	13	116	117	23	120
2018-05-23	14:00	61,4477	00868	00843	35,1570	95,1507	00829	00833	34,3053	00822
2018-05-04	8:00	61,4477	00867	00841	35,1562	95,1507	00827	00830	34,3046	00822
2018-06-13	8:00	61,4477	00866	00841	35,1562	95,1507	00826	00829	34,3046	00822

POLYTESTS
TESTING THROUGH YOUR REALITY

DILUTION TUNNEL PARTICULATE SAMPLER DATA

Date: 2018-05-22 Manufacturer: IHP Model: IRON SHARK

Project #: PI 20165 Run: 1 Tech: MA Reviewer: DP

		HIGH FIRE TEST FILTERS			
		SYSTEM 2			
Pre-test Weight Record		Probe & Housing Number	Front Filter Number	Back Filter Number	gaskets
Date	Time	39	118	119	34
2018-05-22	17:00	110,2771	0,0821	0,0836	35,1496
2018-05-23	9:00	110,2771	0,0821	0,0836	35,1496

		SYSTEM 2			
Post-test Weight Record		Probe & Housing Number	Front Filter Number	Back Filter Number	gaskets
Date	Time	39	118	119	34
2018-05-23	14:00	110,2777	0,0859	0,0832	35,1547
2018-06-04	8:00	110,2777	0,0856	0,0831	35,1537
2018-06-13	8:00	110,2777	0,0856	0,0830	35,1537

POLYTESTS
TESTING THROUGH YOUR REALITY

DILUTION TUNNEL PARTICULATE SAMPLER DATA

Date: 2018-05-22 Manufacturer: IHP Model: Mon strike

Project #: PT 2065 Run: 1 Tech: MS Reviewer: NP

		LOW OR MEDIUM TEST FILTERS								
		SYSTEM 1 – 1st hour				SYSTEM 1				
Pre-test Weight Record		Probe & Housing Number	Front Filter Number	Back Filter Number	gaskets	Probe & Housing Number	Front Filter Number	Back Filter Number	gaskets	Blanck
Date	Time	7	121	122	4 3mm	11	123	124	4	127
2018-05-22	17:00	61,4771	00833	00834	35,1775	93,7256	00838	00834	33,6113	00825
2018-05-23	11:00	61,4770	00833	00834	35,1776	93,7256	00838	00834	33,6114	00825

		SYSTEM 1 – 1st hour				SYSTEM 1				
Post-test Weight Record		Probe & Housing Number	Front Filter Number	Back Filter Number	gaskets	Probe & Housing Number	Front Filter Number	Back Filter Number	gaskets	Blanck
Date	Time	7	121	122	3	11	123	124	4	127
2018-05-23	18:30	61,4772	00839	00829	35,1824	93,7258	00836	00837	33,6142	00826
2018-06-04	8:00	61,4771	00834	00826	35,1809	93,7258	00833	00834	33,6124	00826
2018-06-13	8:00	61,4771	00833	00826	35,1809	93,7258	00833	00833	33,6124	00826

POLYTESTS
TESTING THROUGH YOUR REALITY

DILUTION TUNNEL PARTICULATE SAMPLER DATA

Date: 2018-05-22 Manufacturer: IAP Model: Iron Strike

Project #: pT 20165 Run: 1 Tech: MA Reviewer: DO

		LOW OR MEDIUM FIRE TEST FILTERS			
		SYSTEM 2			
Pre-test Weight Record		Probe & Housing Number	Front Filter Number	Back Filter Number	gaskets
Date	Time	41	125	126	11
2018-05-22	17:00	110 3647	00836	00840	34 6192
2018-05-23	11:00	110 3648	00836	00840	34 6191

		SYSTEM 2			
Post-test Weight Record		Probe & Housing Number	Front Filter Number	Back Filter Number	gaskets
Date	Time	41	125	126	11
2018-05-23	18:30	110 3654 ~~110 3644~~	00848	00839	34 6229
2018-06-04	8:00	110 3654	00845	00837	34 6211
2018-06-13	8:00	110 3654	00844	00836	34 6211

Paramètres

Tous les facteurs de corrections et autres paramètres qui peuvent être modifiés par l'utilisateur du fichier sont regroupés ici.

Code verrouillage:	IHP

Description du test

Test standard	EPA	
Run #	2	
Date	24-05-2018	
Technicien	M.M	
Project #	PI 20165	

Description de l'unité

Manufacturier	IHP	
Modèle	IRON STRIKE	
Combustion system	Non-Cat	
Appliance type	wood stove	
Firebox volume	1,51	cu ft.
Appliance weight empty	n.a	lbs
Fan (no, Standard, Option)	optional	

Paramètres du test

Logging time	1	min
Manufacturer's rated heat output	n.a	BTU/h Donnée fournie par le manfacturier
Targeted category	1	
Targeted output	n.a	BTU/h
Cp steel	n.a	BTU/lb-°F

Échantillonnage

Blank sampling rate	0,20	cuft/min
Internal probe diameter	0,18	in.
Calibration Factor (DGM #1):	0,988	Dimensionless
Equipment number (DGM #1):	em 178	
Calibration Factor (DGM #2):	0,991	Dimensionless
Equipment number (DGM #2):	em 179	
Calibration Factor (DGM #3):	0,996	
Equipment number (DGM #3):	em 070	Dimensionless

Tunnel

Targeted tunnel flow rate	300	scfm
Tunnel diameter	8	in.
Molecular weight	28,78	May be assumed to be 28,78 (EPA) Si B-415 = 29
Pitot tube type	Standard	
Pitot tube coefficient	0,99	Dimensionless

Project nu.	PI 20165
Date	24-05-2018
Technicien	m.m

Fuel data

Fuel type	Cord	
Fuel specie	Oak	
HHV	20207,0	kJ/kg
%C	49,5	
%H	6,6	
%O	43,7	
%Ash	0,2	
HHV	8689,9	Btu/lb
LHV	7600,4	Btu/lb

Default Fuel Values

	D. Fir	Oak/Maple
HHV	19 810	20 207
%C	48,73	49,5
%H	6,87	6,62
%O	43,9	43,7
%Ash	0,5	0,2
HHV (Btu/lb)	8519	8690
LHV (Btu/lb)	7451	7600

Adjunct to ASTM E XXXX Wood Heater Cordwood Test Method - May 10, 2017 Version

Cordwood Fuel Load Calculators - 10 lb/ft^3 Nominal Load Density

Core 45-65% of Total Load Weight, Remainder 35-55% of Total Load Weight

Values to be input manually

For All Usable Firebox Volumes - High Fire Test Only

Nominal Required Load Density (wet basis)	10	lb/ft^3				
Usable Firebox Volume	1,51	ft^3				
Total Nom. Load Wt. Target	15,10	lb				
Total Load Wt. Allowable Range	14,30	to	15,90	lb		
Core Target Wt. Allowable Range	6,80	to	9,80	lb		
Remainder Load Wt. Allowable Range	5,30	to	8,30	lb		
						Mid-Point
Core Load Pc. Wt. Allowable Range	2,30	to	3,80	lb		3,05
Remainder Load Pc. Wt. Allowable Range	1,50	to	8,30	lb		4,90
	Pc. #					
Core Load Piece Wt. Actual	1	3,02	lb	In Range		
	2	3,16	lb	In Range		
	3	3,06	lb	In Range		
Core Load Total. Wt. Actual		9,24	lb	In Range		
	Pc. #					
Remainder Load Piece Wt.	1	5,84	lb	In Range		
(1 to 3 Pcs.)	2		lb	NA		
	3		lb	NA		
Remainder Load Tot. Wt. Act		5,84	lb	In Range		
Total Load Wt. Actual		15,08	lb	In Range		
Core % of Total Wt.		61%		In Range	45-65%	
Remainder % of Total Wt.		39%		In Range	35-55%	
Actual Load % of Nominal Target		100%		In Range	95-105%	
Actual Fuel Load Density		10,0	lb/ft^3			
Kindling and Start-up Fuel						
Maximim Kindling Wt. (20% of Tot. Load Wt.)		3,02	lb			
Actual Kindling Wt.		2,78	lb	In Range	18,5%	
Maximum Start-up Fuel Wt. (30% of Tot. Load Wt.)		4,52	lb			
Actual Start-up Fuel Wt.		4,39	lb	In Range	29,1%	
Allowable Residual Start-up Fuel Wt. Range	1,5	to	3,0	lb		Mid-Point
Actual Residual Start-up Fuel Wt.		2,5	lb	In Range		2,3
Total Wt. All Fuel Added (wet basis)		22,25	lb			
High Fire Test Run End Point Range	Low		High			Mid-Point
Based on Fuel Load Wt. (w/tares)	1,4	to	1,7	lb		1,5
Actual Fuel Load Ending Wt.		na	lb	Out of Range		

Load pieces Length in. 16 in.

Fuel Piece Moisture Reading (%-dry basis)

1	2	3	Ave.		Pc. Wt. Dry Basis		
25,1	23,6	22,7	23,8	In Range	2,44	lb	1,11 kg
25,7	22,8	22,7	23,7	In Range	2,55	lb	1,16 kg
19,1	19,8	19,6	19,5	In Range	2,56	lb	1,16 kg
24	22,6	21,9	22,8	In Range	4,75	lb	2,16 kg
			NA	NA	NA	lb	NA kg
			NA	NA	NA	lb	NA kg

Total Load Ave. MC (%-dry basis) 22,5 In Range

Total Load Ave. MC % (wet basis) 18,4

Total Test Load Weight (dry basis) 12,31 lb 5,58 kg

Kindling Moisture (%-dry basis)

9,3	9	9,4	9,2	In Range	2,55 lb	1,16 kg

Start-up Fuel Moisture Readings (%-dry basis)

19,4	19,6	19,2	19,4	In Range	3,68 lb	1,67 kg

Total Wt. All Fuel Added (dry basis) 18,53 lb 8,41 kg

Total Wt. All Fuel Burned (dry basis) ######## lb ######## kg

Load high fire

Adjunct to ASTM E XXXX Wood Heater Cordwood Test Method - May 10, 2017 Version

Cordwood Fuel Load Calculators - 12 lb/ft^3 Nominal Load Density

Core 45-65% of Total Load Weight, Remainder 35-55% of Total Load Weight

Values to be input manually

THIS DOCUMENT IS NOT AN ASTM STANDARD; IT IS UNDER CONSIDERATION WITHIN AN ASTM TECHNICAL COMMITTEE BUT HAS NOT RECEIVED ALL APPROVALS REQUIRED TO BECOME AN ASTM STANDARD. IT SHALL NOT BE REPRODUCED OR CIRCULATED OR QUOTED, IN WHOLE OR IN PART, OUTSIDE OF ASTM COMMITTEE ACTIVITIES EXCEPT WITH THE APPROVAL OF THE CHAIRMAN OF THE COMMITTEE HAVING JURISDICTION AND THE PRESIDENT OF THE SOCIETY. *COPYRIGHT ASTM, 100 BARR HARBOR DRIVE, WEST CONSHOHOCKEN, PA 19428. ALL RIGHTS RESERVED.*

For Usable Firebox Volumes up to 3.0 ft^3 - Low and Medium Fire

Nominal Required Load Density (wet basis)	12	lb/ft^3					
Usable Firebox Volume	1,51	ft^3					
Total Nom. Load Wt. Target	18,12	lb					
Total Load Wt. Allowable Range	17,21	to	19,03	lb			
Core Target Wt. Allowable Range	8,154	to	11,78	lb			
Remainder Load Wt. Allowable Range	6,34	to	9,97	lb			
						Mid-Point	
Core Load Fuel Pc. Wt. Allowable Range	2,72	to	4,53	lb		3,62	
Remainder Load Pc. Wt. Allowable Range	1,81	to	5,44	lb		3,62	
	Pc. #						
Core Load Piece Wt. Actual	1	3,05	lb	In Range			
	2	3,69	lb	In Range			
	3	3,57	lb	In Range			
Core Load Total. Wt. Actual		10,31	lb	In Range			
	Pc. #						
Remainder Load Piece Wt.	1	4,99	lb	In Range			
(2 or 3 Pcs.)	2	1,92	lb	In Range			
	3		lb	NA			
Remainder Load Piece Weight Ratio - Small/Large		38%		In Range		≤ 67%	
Remainder Load Tot. Wt. Act		6,91	lb	In Range			
Total Load Wt. Actual		17,23	lb	In Range			
Core % of Total Wt.		60%		In Range		45-65%	
Remainder % of Total Wt.		40%		In Range		35-55%	
Actual Load % of Nominal Target		95%		In Range		95-105%	
Actual Fuel Load Density		11,4	lb/ft^3				
Allowable Charcoal Bed Wt. Range (lb)	1,8	to	3,4			Mid-Point	
Actual Charcoal Bed Wt.		2,0	lb	In Range		2,6	
Actual Fuel Load Ending Wt.		0,0	lb	Valid Test		≥ 90%	
Total Wt. of Fuel Burned During Test Run lb.		17,2	lb				
Load pieces Length in.		16	in.				

Fuel Piece Moisture Reading (%-dry basis)

1	2	3	Ave.		Pc. Wt. Dry Basis			
19,6	19,8	19,9	19,8	In Range	2,55	lb	1,16	kg
20,3	19,2	19,6	19,7	In Range	3,08	lb	1,40	kg
24,3	23,9	24	24,1	In Range	2,88	lb	1,31	kg
26,4	25,1	24,3	25,3	In Range	3,99	lb	1,81	kg
26,3	24,6	24	25,0	In Range	1,54	lb	0,70	kg
			NA	NA	NA	lb	NA	kg

Total Load Ave. MC % (dry basis)	22,8	In Range			
Total Load Ave. MC % (wet basis)	18,5				
Total Test Load Weight (dry basis) →			14,03	lb	6,36 kg
Total Fuel Weight Burned During Test Run (dry basis)			14,0	lb	6,36 kg

For Usable Firebox Volumes above 3.0 ft^3 - Low and Medium Fire

Nominal Required Load Density (wet basis)	12	lb/ft^3					
Usable Firebox Volume		ft^3					
Total Nom. Load Wt. Target	0	lb					
Total Load Wt. Allowable Range	0,00	to	0,00	lb			
Core Target Wt. Allowable Range	0,00	to	0,00	lb			
Remainder Load Wt. Allowable Range	0,00	to	0,00	lb			
						Mid-Point	
Core Load Fuel Pc. Wt. Allowable Range	0,00	to	0,00	lb		0,00	
Remainder Load Pc. Wt. Allowable Range	0,00	to	0,00	lb		0,00	
	Pc. #						
Core Load Piece Wt. Actual	1		lb	In Range			
	2		lb	In Range			
	3		lb	In Range			
Core Load Total. Wt. Actual		0,00	lb	In Range			
	Pc. #						
Remainder Load Piece Wt.	1		lb	In Range			
(3 or 4 Pcs.)	2		lb	In Range			
	3		lb	In Range			
	4		lb	NA			
Remainder Load Piece Weight Ratio - Small/Large		#NOMBRE!		#NOMBRE!		≤ 67%	
Remainder Load Tot. Wt. Act		0,00	lb	In Range			
Total Load Wt. Actual		0,00	lb	In Range			
Core % of Total Wt.		#DIV/0!		#DIV/0!		45-65%	
Remainder % of Total Wt.		#DIV/0!		#DIV/0!		35-55%	
Actual Load % of Nominal Target		#DIV/0!		#DIV/0!		95-105%	
Actual Fuel Load Density		#DIV/0!	lb/ft^3				
Allowable Charcoal Bed Wt. Range (lb)	0,1	to	-0,1			Mid-Point	
Actual Charcoal Bed Wt.			lb	Out of Range		0,0	
Actual Fuel Load Ending Wt.			lb	Valid Test		≥ 90%	
Total Wt. of Fuel Burned During Test Run lb.		0,0	lb				

Fuel Piece Moisture Reading (%-dry basis)

1	2	3	Ave.		Pc. Wt. Dry Basis			
			#DIV/0!	#DIV/0!	#DIV/0!	lb	#DIV/0!	kg
			#DIV/0!	#DIV/0!	#DIV/0!	lb	#DIV/0!	kg
			#DIV/0!	#DIV/0!	#DIV/0!	lb	#DIV/0!	kg
			#DIV/0!	#DIV/0!	#DIV/0!	lb	#DIV/0!	kg
			#DIV/0!	#DIV/0!	#DIV/0!	lb	#DIV/0!	kg
			#DIV/0!	#DIV/0!	#DIV/0!	lb	#DIV/0!	kg
			NA	NA	NA	lb	NA	kg

Total Load Ave. MC % (dry basis)	#DIV/0!	#DIV/0!			
Total Load Ave. MC % (wet basis)	#DIV/0!				
Total Test Load Weight (dry basis) →			#DIV/0!	lb	#DIV/0! kg
Total Fuel Weight Burned During Test Run (dry basis)			#DIV/0!	lb	#DIV/0! kg

	Start	End
Barometer (kPa):	101,6	101
Barometer (in.Hg):	30,002469	29,82528877
Dry Bulb (F):	78,8	86,01
Humidity (%):	31,9	26,5
Air velocity (ft/min)	6	3

High fire test						
DGM #1	Final:	0,000	cuft	Final:		Liter
	Initial:	0,000	cuft	Initial:		Liter
DGM #2	Final:	0,000	cuft	Final:		Liter
	Initial:	0,000	cuft	Initial:		Liter
DGM room				Final:		cuft
				Initial:		cuft

min or med burnrate						
DGM #1	Final:	24002,111	cuft	Final:	679664,090	Liter
	Initial:	23946,207	cuft	Initial:	678081,070	Liter
DGM #2	Final:	22321,539	cuft	Final:	632075,580	Liter
	Initial:	22263,687	cuft	Initial:	630437,400	Liter
DGM room				Final:	671,410	cuft
				Initial:	654,360	cuft

Numéro de la ligne dans "Raw data" à partir duquel les données du test commence	
Numéro de la ligne dans "Raw data" à partir duquel les données du highfire test commence	
Numéro de la ligne dans "Raw data" à partir duquel les données du min ou medium fire test commence	276

Autres données à rentrer: dans preload data, load data, traverse et filter set weight

Project nu.	PI 20165
Date	24-05-2018
Technicien	maxime m

Tunnel Traverse Worksheet (for velocity calculations)

Static Pressure: 0,15 in. H20
Barometer: 30,002 in. Hg

Pour un tunnel de 12" et plus, prendre 6 lectures

	TUNNEL VELOCITY	TUNNEL TEMP	SQUARE ROOT
	In. wc	°F	
A center			0,0000
B center			0,0000
A1			0,0000
A2			0,0000
A3			0,0000
A4			0,0000
A5			0,0000
A6			0,0000
B1			0,0000
B2			0,0000
B3			0,0000
B4			0,0000
B5			0,0000
B6			0,0000
AVERAGE	#DIV/0!	#DIV/0!	0,0000

PITOT CONSTANT=
0,950

Pour un tunnel moins de 12", prendre 4 lectures

	TUNNEL VELOCITY	TUNNEL TEMP	SQUARE ROOT
	In. wc	°F	
A center	0,053	83,06	0,2302
B center	0,054	82,04	0,2324
A1	0,043	83,02	0,2074
A2	0,046	82,92	0,2145
A3	0,054	82,8	0,2324
A4	0,042	82,7	0,2049
B1	0,043	82,480	0,2074
B2	0,054	82,000	0,2324
B3	0,052	81,780	0,2280
B4	0,043	81,520	0,2074
AVERAGE	0,0484	82,4320	0,2197

Project nu.	PI 20165
Date	24-05-2018
Technicien	mm

Filter set weight Low/ medium fire

	System 1 (g) 1st hour				System 1 (g)				System 2 (g)				Ambient blank (g)	Date	Heure
	probe	front	back	gasket	probe	front	back	gasket	probe	front	back	gasket	Filter		
Number	10	128	129	15	15	130	131	25	19	132	140	29	141		
Before (1)															
Before (2)															
Before (3)															
Before (4)															
Before (5)	94,6409	0,0840	0,0838	35,4990	108,7837	0,0835	0,0838	34,9441	109,0921	0,0837	0,0838	35,2128	0,0839	2018-05-23	18:00
Before (6)	94,6409	0,0840	0,0838	35,4989	108,7837	0,0835	0,0838	34,9442	109,0922	0,0837	0,0838	35,2129	0,0839	2018-05-24	09:00
After (1)	94,641	0,0849	0,0837	35,5013	108,7844	0,1033	0,0842	34,9456	109,093	0,1043	0,0835	35,2168	0,0841	2018-05-24	18:00
After (2)	94,6410	0,0846	0,0834	35,5010	108,7844	0,1023	0,0839	34,9453	109,0929	0,1039	0,0833	35,2159	0,0841	2018-06-04	08:00
After (3)	94,6410	0,0846	0,0834	35,5010	108,7844	0,1023	0,0838	34,9453	109,0929	0,1039	0,0833	35,2159	0,0841	2018-06-13	08:00
After (4)															
After (5)															
After (6)	94,6410	0,0846	0,0834	35,5010	108,7844	0,1023	0,0838	34,9453	109,0929	0,1039	0,0833	35,2159	0,0841	2018-06-13	08:00
Difference	0,0001	0,0006	-0,0004	0,0021	0,0007	0,0188	0,0000	0,0011	0,0007	0,0202	-0,0005	0,0030	0,0002		
Total (mg)		2,4				23				23,4			0,2		
Total ajusté (mg)		**2,20**				**22,80**				**23,20**					

Project nu.	PI 20165
Date	24-05-2018
Technicien	mm

SFBA EPA EMISSION RESULTS

Test Duration: **321** min

PRESSURE FACTOR:	DGM 1	0,98310	
	DGM 2	0,98255	
	DGM 3	0,99980	
TEMPERATURE FACTORS	DGM 1	0,96885	
	DGM 2	0,96767	
	DGM 3	0,97522	
VOLUMES SAMPLED	DGM 1	52,633	SCft
	DGM 2	54,531	Scft
	DGM 3	16,554	SCft

TOTAL TUNNEL VOLUME : 90444

SAMPLE RATIOS

Sample Train 1:	1718,385
Sample Train 2:	1658,571

Paticulate concentration

Sample Train 1	**0,000437**	g/dscf
Sample Train 2	**0,000429**	g/dscf
Room	**0,000012**	g/dscf

TOTAL EMISSIONS

Sample Train 1	**38,43**	g
Sample Train 2	**37,72**	g

EMISSION RATES

Sample Train 1	**7,18**	g/hr
Sample Train 2	**7,05**	g/hr

1st hour emission rate **4,12** g/hr

	Train 1	Train 2
Cs	0,000437	0,00042911

RESULTS

Average emission rate: 7,12 g/hr

Burn Rate : 1,190 Dry kg/hr

BAROMETRIC PRESSURE

Average:	29,91387874	in Hg
Start:	30,00246871	in Hg
End:	29,82528877	in Hg

DGM CONTROLLER VALUES

DGM 1	Final:	24002,111	Cuft
	Initial:	23946,207	Cuft
DGM 2	Final:	22321,539	Cuft
	Initial:	22263,687	Cuft
DGM #3	Final:	671,410	Cuft
	Initial:	654,360	Cuft

TEMPERATURES

DGM 1	544,974	°R
DGM 2	545,641	°R

CALIBRATION FACTORS

DGM 1	0,9885
DGM 2	0,9914
DGM #3	0,9958

TUNNEL FLOW RATE: 281,758 Dscfm

PARTICULATE CATCH

Total Sample Train 1:	23,00	mg
Total Sample Train 2:	23,40	mg
Total Sample Train 1 1st hour:	2,40	mg

DEVIATION: 0,94%

*		*	*	*	*1	*2	*3	*4	*5	*6	*7	*8
Elapsed		Weight			Flue	Room	Tunnel	Unit	Unit	Unit	Unit	Unit
Time	Raw data row	Remaining	CO	CO_2	Gas	Temp	Dry Bulb	Top	Back	R.Side	L.Side	Bottom
min		lbs	%	%	°F	°F	°F	°F	°F	°F	°F	°F
0,00	276,00	17,2	0,7	4,9	436,2	80,9	130,9	460,7	415,1	469,8	464,2	548,3
1,0	277,0	16,9	0,1	7,3	323,6	80,3	150,0	437,1	421,0	474,1	472,1	552,8
2,0	278,0	16,7	0,2	4,1	413,3	80,8	133,1	433,5	424,2	474,1	463,2	555,8
3,0	279,0	16,5	0,1	10,6	653,1	81,0	142,9	495,7	425,9	473,5	457,1	555,2
4,0	280,0	16,0	0,2	12,1	722,9	80,9	149,9	553,9	425,4	472,6	454,8	554,4
5,0	281,0	15,9	0,1	14,1	765,2	81,1	156,8	627,3	423,9	472,0	454,2	552,8
6,0	282,0	15,6	0,1	13,8	784,2	81,6	161,0	687,1	421,6	469,7	454,8	550,7
7,0	283,0	15,3	0,1	14,1	801,5	81,3	164,6	736,4	420,2	469,5	456,3	549,2
8,0	284,0	14,9	0,2	14,5	814,6	82,0	166,9	777,2	419,2	468,1	458,2	547,1
9,0	285,0	14,6	0,2	14,6	823,3	82,0	168,3	809,4	416,9	466,8	460,3	544,7
10,0	286,0	14,3	0,2	14,6	823,9	81,9	169,6	836,4	415,5	466,7	462,6	542,0
11,0	287,0	13,9	0,2	14,4	827,0	82,3	170,3	856,2	414,2	465,5	464,5	539,1
12,0	288,0	13,7	0,3	14,8	848,6	82,1	171,9	882,5	412,3	464,3	465,7	536,2
13,0	289,0	13,4	0,3	15,2	866,2	82,7	175,1	909,3	410,8	464,1	467,4	533,3
14,0	290,0	13,1	0,3	15,3	874,4	82,3	176,1	931,8	409,6	465,0	468,9	530,1
15,0	291,0	12,8	0,3	15,9	756,6	81,8	151,0	943,2	408,3	465,2	469,7	528,3
16,0	292,0	12,7	0,1	13,7	651,3	82,4	136,0	921,3	406,7	465,6	470,3	526,5
17,0	293,0	12,5	0,2	11,4	597,3	82,3	129,5	888,3	404,4	464,9	469,9	524,3
18,0	294,0	12,4	0,2	10,8	566,5	82,6	126,8	857,4	403,5	464,5	468,5	522,8
19,0	295,0	12,2	0,2	10,6	545,9	82,4	124,0	828,7	401,6	463,1	466,9	521,4
20,0	296,0	12,1	0,2	10,5	532,7	82,6	123,0	808,7	400,4	462,4	465,0	519,6
21,0	297,0	12,0	0,2	10,4	522,3	82,5	121,7	790,6	397,7	461,1	462,7	518,0
22,0	298,0	11,8	0,2	10,3	513,7	82,3	121,2	773,8	396,0	459,3	460,6	516,2
23,0	299,0	11,7	0,3	10,2	506,6	82,6	120,2	758,2	394,4	457,8	458,6	514,9
24,0	300,0	11,5	0,3	10,3	502,7	82,3	119,8	746,7	392,3	456,7	456,4	512,8
25,0	301,0	11,4	0,2	10,3	498,7	82,5	118,2	736,1	389,9	454,9	453,7	510,9
26,0	302,0	11,3	0,2	10,4	497,2	82,7	118,5	728,4	387,9	453,0	451,6	508,7
27,0	303,0	11,2	0,2	10,4	493,8	82,5	118,0	723,1	386,6	451,3	449,5	506,7
28,0	304,0	11,0	0,2	10,4	488,8	82,5	117,9	716,6	384,5	449,1	447,9	504,7
29,0	305,0	11,0	0,3	9,5	479,4	82,0	116,8	706,5	382,3	447,2	446,9	502,5
30,0	306,0	10,8	0,3	8,7	467,8	82,5	116,3	692,8	380,7	445,5	445,7	500,3
31,0	307,0	10,7	0,4	8,2	454,1	82,7	114,6	678,3	379,6	443,6	445,1	497,8
32,0	308,0	10,6	0,7	6,8	439,7	82,6	114,2	661,6	377,6	441,5	445,2	496,0
33,0	309,0	10,5	0,6	7,3	428,8	82,8	112,8	646,9	376,9	440,0	445,5	493,8
34,0	310,0	10,4	0,6	7,1	420,0	83,0	112,3	632,5	375,1	437,4	445,7	491,5
35,0	311,0	10,4	0,5	7,3	417,1	82,4	111,9	620,2	373,1	435,2	445,4	488,5
36,0	312,0	10,3	0,4	7,4	414,9	82,4	111,4	611,2	372,1	433,7	443,8	486,0
37,0	313,0	10,1	0,4	7,3	411,2	82,4	111,2	601,3	371,7	431,8	442,0	483,4
38,0	314,0	10,1	0,4	7,1	406,7	82,6	111,0	594,0	369,9	430,2	440,1	480,5
39,0	315,0	10,0	0,4	7,4	405,8	82,6	109,7	590,4	368,3	428,6	437,3	477,3
40,0	316,0	10,0	0,4	7,6	407,3	82,0	109,9	585,7	367,6	426,2	434,6	474,5
41,0	317,0	9,9	0,3	7,8	408,5	82,6	110,4	583,8	366,1	425,2	432,4	471,8
42,0	318,0	9,8	0,3	8,0	409,3	82,4	109,9	583,0	365,2	423,6	430,2	468,8
43,0	319,0	9,7	0,3	8,2	412,3	82,5	109,9	584,2	364,8	423,0	428,3	466,0
44,0	320,0	9,6	0,3	7,9	410,4	82,3	108,6	579,3	363,4	421,5	427,1	463,1
45,0	321,0	9,5	0,3	7,8	408,1	82,3	109,0	574,5	363,3	420,4	426,2	460,5
46,0	322,0	9,4	0,4	7,7	404,6	82,4	109,5	569,8	363,1	419,8	425,3	457,9
47,0	323,0	9,3	0,4	7,6	402,4	82,0	107,9	565,7	361,6	418,7	425,0	454,9
48,0	324,0	9,2	0,4	7,4	399,4	82,2	107,8	561,6	360,7	418,1	423,9	452,1
49,0	325,0	9,1	0,4	7,5	397,9	82,1	107,8	558,3	359,9	417,1	423,1	449,3
50,0	326,0	9,0	0,3	7,6	398,1	82,2	108,1	556,7	359,4	415,8	421,9	446,4
51,0	327,0	9,0	0,3	7,9	398,8	82,2	107,3	556,0	358,5	415,3	420,7	443,5
52,0	328,0	8,9	0,3	7,8	400,1	82,1	107,7	555,6	358,3	414,5	419,8	440,6
53,0	329,0	8,8	0,2	8,2	402,2	82,1	107,5	555,6	357,1	412,8	419,6	438,1
54,0	330,0	8,7	0,2	8,4	406,5	82,2	107,9	557,3	357,3	413,0	419,7	435,8
55,0	331,0	8,6	0,2	8,7	412,5	82,0	107,3	558,3	356,2	412,2	420,6	433,3
56,0	332,0	8,5	0,2	9,2	419,2	82,2	108,1	561,4	355,6	412,2	421,4	430,9
57,0	333,0	8,4	0,2	9,6	427,1	82,3	108,1	570,3	354,7	410,9	422,8	428,0
58,0	334,0	8,3	0,2	9,8	432,4	82,4	108,6	579,5	354,5	410,1	423,3	425,4
59,0	335,0	8,2	0,1	9,6	431,6	82,4	107,9	586,0	353,9	409,1	423,6	422,9
60,0	336,0	8,1	0,1	9,3	429,3	82,4	107,6	589,3	354,0	408,7	423,8	420,5
61,0	337,0	8,0	0,2	9,4	428,5	82,3	108,7	589,8	353,9	409,1	424,6	418,3
62,0	338,0	7,9	0,2	9,5	429,7	82,4	108,4	591,8	353,9	408,4	425,7	415,9
63,0	339,0	7,8	0,2	9,4	430,8	82,4	108,2	597,3	354,3	408,3	426,4	413,9
64,0	340,0	7,7	0,2	9,1	428,7	82,5	108,2	601,4	354,0	408,3	427,1	411,4
65,0	341,0	7,7	0,2	8,4	422,2	82,6	107,8	600,7	354,4	407,4	427,8	409,6
66,0	342,0	7,6	0,1	8,2	417,5	82,6	107,9	599,0	354,4	408,5	429,0	408,0
67,0	343,0	7,5	0,2	7,6	409,3	82,7	106,1	592,5	355,0	406,7	431,0	405,9
68,0	344,0	7,4	0,2	7,1	399,0	82,3	106,0	584,7	355,5	407,1	433,3	404,1
69,0	345,0	7,4	0,3	6,3	387,9	82,0	105,2	576,0	355,6	407,4	435,3	402,5
70,0	346,0	7,4	0,4	5,5	375,0	82,4	105,2	563,8	355,4	406,7	436,5	401,0
71,0	347,0	7,3	0,3	5,3	368,0	82,6	104,7	552,0	355,5	406,8	435,3	399,3
72,0	348,0	7,2	0,3	5,3	362,8	82,7	104,1	541,7	355,0	406,1	433,2	397,6
73,0	349,0	7,2	0,3	5,4	358,6	82,5	103,6	533,2	354,5	404,9	431,1	395,8
74,0	350,0	7,2	0,3	5,4	355,6	82,5	103,3	524,4	354,3	403,4	428,4	393,8
75,0	351,0	7,1	0,3	5,4	353,3	82,3	102,7	517,4	353,3	401,6	426,3	392,6
76,0	352,0	7,1	0,3	5,2	350,2	82,2	103,0	509,6	352,6	400,1	424,1	391,6
77,0	353,0	7,0	0,4	5,1	345,5	82,1	102,7	503,3	351,6	399,5	422,4	390,5
78,0	354,0	7,0	0,5	4,9	341,0	82,2	102,3	496,1	351,0	398,1	420,7	389,1
79,0	355,0	7,0	0,4	5,1	339,6	82,2	101,7	490,3	349,4	397,1	418,9	388,2
80,0	356,0	6,9	0,6	4,8	332,1	82,2	101,4	482,9	348,3	395,5	416,6	387,4
81,0	357,0	6,9	0,9	4,2	323,3	82,0	101,1	474,9	346,4	393,6	414,4	386,2
82,0	358,0	6,8	0,9	4,1	316,3	82,1	100,7	466,8	345,2	392,0	411,6	385,3
83,0	359,0	6,8	1,0	4,0	310,6	81,9	99,3	459,3	342,9	388,7	409,2	384,3
84,0	360,0	6,8	1,0	4,0	306,1	81,8	98,9	450,8	341,0	386,8	406,0	383,6
85,0	361,0	6,7	1,0	4,1	301,8	81,7	98,6	444,2	339,1	384,9	402,8	383,5
86,0	362,0	6,7	1,0	4,0	298,0	81,9	98,8	437,2	337,1	383,7	399,8	383,2
87,0	363,0	6,6	1,0	4,0	294,8	81,9	98,6	430,9	335,3	382,0	397,1	383,0
88,0	364,0	6,6	1,0	4,1	291,9	81,9	98,8	425,2	333,5	380,6	394,5	382,8
89,0	365,0	6,5	1,0	4,0	288,9	81,5	97,8	419,3	330,9	378,8	391,6	382,2
90,0	366,0	6,5	1,0	4,1	286,2	81,2	98,0	414,0	329,5	375,5	389,0	381,7
91,0	367,0	6,5	1,0	4,1	284,3	81,4	98,5	409,1	327,9	375,0	386,5	381,4
92,0	368,0	6,5	0,9	4,1	282,3	81,5	97,4	404,2	325,6	373,5	384,0	381,1
93,0	369,0	6,4	1,0	4,1	279,7	81,5	96,8	399,4	323,7	371,3	381,7	380,3
94,0	370,0	6,4	1,0	4,1	277,7	81,3	96,7	395,1	322,2	368,7	379,2	379,4
95,0	371,0	6,3	1,0	4,1	276,4	81,5	96,5	391,4	320,0	367,0	376,9	379,0
96,0	372,0	6,3	1,0	4,2	274,6	81,6	96,9	388,2	318,5	365,0	375,0	378,8
97,0	373,0	6,2	1,0	4,1	272,8	81,0	96,3	384,6	316,4	363,4	372,8	378,3

98,0	374,0	6,2	1,0	4,1	271,2	81,3	96,0	381,3	316,1	362,5	370,8	378,5
99,0	375,0	6,2	1,0	4,1	269,6	81,3	96,5	378,4	313,9	361,1	368,9	378,5
100,0	376,0	6,1	1,0	4,1	267,9	81,2	95,8	375,2	312,0	359,4	367,1	378,1
101,0	377,0	6,1	1,0	4,1	266,1	81,4	96,0	372,3	310,4	358,4	365,1	378,1
102,0	378,0	6,0	1,0	4,1	264,8	81,3	95,6	369,1	309,4	356,7	363,1	378,0
103,0	379,0	6,0	1,0	4,1	263,7	81,1	95,5	366,6	307,6	355,3	361,1	377,7
104,0	380,0	6,0	1,0	4,1	261,8	81,3	95,7	363,5	306,4	353,7	359,2	378,0
105,0	381,0	5,9	1,0	4,0	260,7	81,1	95,5	361,7	305,2	353,2	357,5	378,1
106,0	382,0	5,9	1,0	4,1	259,9	81,2	95,3	358,7	303,5	351,8	355,5	378,3
107,0	383,0	5,8	1,0	4,1	258,5	81,0	95,5	356,9	301,9	351,2	353,9	378,5
108,0	384,0	5,8	1,0	4,1	257,2	81,0	94,7	354,0	300,9	349,0	352,0	378,3
109,0	385,0	5,8	1,0	4,1	256,3	81,3	94,1	351,4	300,1	346,5	350,6	377,9
110,0	386,0	5,7	1,0	4,1	255,7	81,3	94,7	349,9	298,7	347,1	348,9	378,1
111,0	387,0	5,7	1,0	4,1	254,5	81,3	94,4	347,8	296,9	346,4	347,5	378,0
112,0	388,0	5,6	1,0	4,1	253,3	81,2	94,4	345,4	295,7	345,3	346,1	377,9
113,0	389,0	5,6	1,0	4,1	252,9	81,3	94,8	343,8	294,4	344,4	344,6	378,0
114,0	390,0	5,6	1,0	4,1	252,2	81,3	94,6	342,2	293,5	343,0	343,3	377,8
115,0	391,0	5,5	1,0	4,2	251,4	81,2	94,3	340,0	292,4	342,1	341,8	377,7
116,0	392,0	5,5	1,0	4,2	250,4	81,3	93,5	338,5	291,1	340,3	340,5	377,9
117,0	393,0	5,4	1,0	4,3	250,0	81,2	94,0	337,0	290,2	339,6	339,3	377,9
118,0	394,0	5,4	1,0	4,3	249,9	81,3	93,7	335,8	289,5	339,4	337,9	378,3
119,0	395,0	5,4	0,9	4,3	249,2	81,3	94,2	334,8	288,4	338,1	336,9	378,8
120,0	396,0	5,3	1,0	4,3	249,1	81,4	94,2	333,9	287,7	337,9	335,7	379,3
121,0	397,0	5,3	1,0	4,3	249,2	81,4	93,5	332,5	286,2	337,6	334,8	379,5
122,0	398,0	5,2	1,0	4,4	249,3	81,3	93,8	332,0	285,4	336,6	333,9	379,8
123,0	399,0	5,2	1,0	4,3	248,9	81,2	93,1	330,8	284,8	334,8	332,6	379,5
124,0	400,0	5,1	1,0	4,4	249,0	81,2	93,1	330,5	283,8	334,2	331,8	379,9
125,0	401,0	5,1	1,0	4,5	249,4	81,3	93,9	330,0	282,9	333,7	331,3	380,1
126,0	402,0	5,1	1,0	4,4	249,1	81,2	93,5	329,2	282,5	333,1	330,3	380,3
127,0	403,0	5,1	1,0	4,4	248,6	81,3	93,3	328,4	281,9	332,6	329,5	380,5
128,0	404,0	5,0	1,0	4,5	248,6	81,1	93,1	328,1	281,5	330,7	328,6	381,2
129,0	405,0	4,9	0,9	4,5	249,0	81,2	93,1	327,6	280,8	331,7	328,2	381,7
130,0	406,0	4,9	0,9	4,5	248,0	81,1	92,8	327,2	279,8	330,7	327,8	382,0
131,0	407,0	4,9	0,9	4,4	247,5	81,2	93,1	326,6	279,1	329,8	327,3	382,4
132,0	408,0	4,8	0,9	4,4	246,8	81,1	93,1	326,2	278,7	330,1	326,7	382,5
133,0	409,0	4,8	0,9	4,4	246,9	81,3	93,3	325,8	278,2	329,8	326,1	382,8
134,0	410,0	4,7	0,9	4,5	246,5	81,4	93,3	325,3	278,0	328,7	325,7	383,6
135,0	411,0	4,7	0,9	4,4	246,5	81,3	93,4	325,3	277,2	329,6	325,2	384,3
136,0	412,0	4,7	0,9	4,5	246,3	81,3	92,8	325,1	276,9	329,1	324,7	384,5
137,0	413,0	4,6	0,9	4,4	246,2	81,3	93,1	324,5	276,3	329,2	324,3	384,9
138,0	414,0	4,5	0,8	4,6	246,4	81,2	93,1	324,3	276,1	328,7	323,7	385,2
139,0	415,0	4,5	0,8	4,6	247,3	81,2	93,1	324,0	275,8	328,8	323,0	385,7
140,0	416,0	4,5	0,8	4,6	247,3	81,3	92,8	324,3	275,5	328,6	322,7	386,0
141,0	417,0	4,4	0,8	4,6	247,6	81,3	93,1	324,3	275,2	328,9	322,1	386,6
142,0	418,0	4,4	0,8	4,6	247,4	81,1	92,8	324,2	274,9	328,6	321,3	387,1
143,0	419,0	4,4	0,8	4,7	247,7	81,2	92,9	324,5	274,8	328,7	320,8	387,9
144,0	420,0	4,3	0,7	4,7	248,0	81,2	93,0	325,1	275,0	327,9	320,3	388,6
145,0	421,0	4,3	0,7	4,7	248,1	81,2	93,3	325,3	274,5	328,7	319,8	388,9
146,0	422,0	4,2	0,7	4,7	248,7	81,1	92,9	325,3	274,7	327,8	319,1	389,3
147,0	423,0	4,2	0,6	5,0	251,2	81,3	93,1	326,1	275,0	330,3	318,3	389,9
148,0	424,0	4,1	0,5	5,0	253,3	81,2	92,8	327,0	275,0	328,9	317,8	390,2
149,0	425,0	4,1	0,5	5,1	255,6	81,4	93,0	328,1	275,5	330,8	317,1	390,8
150,0	426,0	4,0	0,5	5,1	256,9	81,5	93,2	329,5	275,4	331,4	316,6	391,3
151,0	427,0	4,0	0,5	5,1	257,1	81,4	92,7	330,2	275,4	331,8	316,3	391,6
152,0	428,0	4,0	0,6	4,9	257,8	81,3	92,6	331,4	276,0	332,5	315,6	391,3
153,0	429,0	3,9	0,6	5,1	258,5	81,3	93,4	332,6	276,2	334,5	315,2	391,9
154,0	430,0	3,9	0,6	5,2	259,8	81,3	93,1	334,6	276,6	335,7	314,7	392,2
155,0	431,0	3,8	0,5	5,3	262,0	81,1	93,5	336,3	277,2	337,0	314,4	392,7
156,0	432,0	3,8	0,5	5,4	264,0	81,2	93,0	338,3	277,5	338,1	314,0	392,9
157,0	433,0	3,8	0,5	5,5	265,4	81,4	94,0	340,5	278,0	339,4	313,6	393,3
158,0	434,0	3,7	0,5	5,5	266,8	81,3	93,4	342,9	278,5	341,2	313,6	393,6
159,0	435,0	3,6	0,5	5,5	268,5	81,2	93,8	345,0	279,5	343,6	313,6	393,9
160,0	436,0	3,6	0,5	5,5	269,9	81,3	93,8	347,0	280,5	344,8	313,4	394,2
161,0	437,0	3,6	0,5	5,6	270,4	81,3	93,9	349,0	281,3	346,4	313,3	394,6
162,0	438,0	3,5	0,5	5,5	271,0	81,3	94,0	350,9	282,2	347,5	313,2	394,9
163,0	439,0	3,4	0,5	5,6	271,2	81,0	93,8	352,8	283,2	348,9	313,2	395,1
164,0	440,0	3,4	0,5	5,6	271,9	81,2	93,9	354,5	284,4	350,0	313,3	395,4
165,0	441,0	3,4	0,5	5,6	273,0	81,2	93,5	355,9	285,8	351,7	313,4	396,0
166,0	442,0	3,3	0,5	5,5	273,0	81,1	93,7	357,2	287,3	351,5	313,6	396,6
167,0	443,0	3,3	0,5	5,5	273,1	81,2	93,9	358,3	288,7	353,1	313,4	397,0
168,0	444,0	3,3	0,5	5,4	273,1	81,3	94,2	359,8	290,1	355,0	313,6	397,5
169,0	445,0	3,2	0,5	5,5	272,7	81,3	94,3	360,9	291,9	356,3	313,8	397,7
170,0	446,0	3,2	0,6	5,0	270,5	81,1	94,1	360,6	293,0	357,3	314,0	398,1
171,0	447,0	3,1	0,6	5,0	268,4	81,1	94,1	359,9	294,7	357,5	314,0	398,4
172,0	448,0	3,1	0,6	4,9	265,7	81,1	93,9	358,0	296,3	358,4	314,0	398,6
173,0	449,0	3,1	0,7	4,8	263,9	80,9	93,7	357,0	297,5	358,8	313,9	399,2
174,0	450,0	3,1	0,7	4,6	261,7	81,0	93,8	355,5	298,7	359,5	314,0	399,6
175,0	451,0	3,0	0,8	4,6	259,4	81,1	93,7	353,7	300,3	359,9	313,9	400,0
176,0	452,0	3,0	0,7	4,7	258,4	81,1	93,7	352,2	301,4	360,3	313,9	400,5
177,0	453,0	2,9	0,7	4,6	257,3	81,1	94,1	350,9	302,6	360,6	313,9	401,0
178,0	454,0	2,9	0,9	4,3	254,3	81,0	93,6	349,1	303,5	360,7	313,8	401,3
179,0	455,0	2,9	0,8	4,4	253,2	81,1	93,7	347,1	304,6	360,7	313,6	401,8
180,0	456,0	2,8	0,8	4,3	251,5	81,0	93,6	345,5	305,2	360,7	313,5	402,3
181,0	457,0	2,8	0,8	4,2	249,1	81,2	93,4	343,3	305,8	360,8	313,2	402,9
182,0	458,0	2,8	0,8	4,1	248,3	81,2	93,3	341,7	306,4	360,7	313,0	403,2
183,0	459,0	2,7	0,8	4,1	247,3	81,1	93,6	339,8	306,8	360,6	312,8	403,6
184,0	460,0	2,7	0,8	4,1	245,1	81,0	92,8	337,6	307,2	360,1	312,5	403,9
185,0	461,0	2,6	0,8	4,1	244,1	81,1	93,2	336,0	307,9	359,9	312,2	404,6
186,0	462,0	2,6	0,8	4,1	242,2	80,9	92,2	304,7	279,2	353,6	312,0	404,0
187,0	463,0	2,6	0,8	4,1	237,3	80,7	91,6	285,3	256,9	347,9	310,7	403,0
188,0	464,0	2,5	0,8	4,1	232,2	81,0	91,5	269,9	242,1	343,9	309,1	402,6
189,0	465,0	2,5	0,8	4,1	227,5	80,8	91,4	256,1	230,5	341,4	307,8	401,7
190,0	466,0	2,5	0,8	4,2	223,1	80,8	91,3	244,4	222,4	338,4	305,9	401,5
191,0	467,0	2,5	0,8	4,2	219,7	80,9	90,9	234,6	215,4	335,7	304,8	400,9
192,0	468,0	2,4	0,8	4,2	216,6	80,6	90,8	225,7	210,0	333,5	303,1	400,3
193,0	469,0	2,4	0,8	4,2	214,0	80,9	90,8	219,2	205,9	330,8	301,2	400,0
194,0	470,0	2,4	0,8	4,2	211,7	80,8	90,6	212,8	202,0	328,9	299,8	399,9
195,0	471,0	2,4	0,8	4,2	209,8	80,8	90,5	207,9	198,8	326,4	298,3	399,6
196,0	472,0	2,3	0,8	4,3	207,9	80,8	90,5	203,4	196,3	324,3	297,3	398,7
197,0	473,0	2,3	0,8	4,3	206,0	80,6	90,3	200,1	194,0	322,8	295,6	398,3
198,0	474,0	2,3	0,8	4,3	204,9	80,5	90,2	196,7	191,9	319,9	294,7	398,2
199,0	475,0	2,2	0,8	4,3	203,1	80,8	90,0	194,0	190,1	318,5	293,8	397,0

200,0	476,0	2,2	0,8	4,3	201,6	80,9	90,1	191,6	188,6	316,8	291,8	396,8
201,0	477,0	2,2	0,8	4,3	200,4	81,1	90,0	189,6	187,3	314,8	291,5	395,8
202,0	478,0	2,1	0,8	4,3	199,2	81,1	89,9	187,8	186,2	313,3	290,0	396,1
203,0	479,0	2,1	0,8	4,3	198,2	81,2	89,7	186,7	185,4	311,4	288,7	396,6
204,0	480,0	2,1	0,9	4,1	197,0	81,3	89,8	185,2	184,5	310,2	287,0	396,5
205,0	481,0	2,1	0,9	4,1	196,1	81,2	89,6	184,1	183,6	309,1	286,2	396,3
206,0	482,0	2,0	0,9	4,1	195,2	81,2	89,6	182,8	182,6	307,6	285,6	396,5
207,0	483,0	2,0	0,9	4,1	194,4	81,3	89,5	181,9	182,1	306,0	284,0	396,6
208,0	484,0	2,0	0,9	4,1	193,5	80,9	89,6	180,8	181,4	305,0	283,2	396,5
209,0	485,0	2,0	0,9	4,0	192,7	80,9	89,5	179,9	181,1	302,8	283,0	396,5
210,0	486,0	1,9	0,9	4,1	191,7	81,1	89,5	179,0	180,2	301,8	281,2	396,5
211,0	487,0	1,9	0,8	4,1	191,0	81,1	89,4	177,7	179,7	300,8	280,3	395,8
212,0	488,0	1,9	0,8	4,1	190,1	81,1	89,3	177,1	179,3	298,8	279,7	396,1
213,0	489,0	1,8	0,8	4,1	189,5	80,9	89,3	176,6	178,6	298,1	279,2	395,5
214,0	490,0	1,8	0,8	4,1	188,9	80,9	89,2	175,7	178,3	296,1	278,5	395,3
215,0	491,0	1,8	0,8	4,1	188,3	81,0	89,2	174,9	177,4	295,4	277,4	394,5
216,0	492,0	1,8	0,8	4,1	187,7	80,9	89,2	174,5	177,0	293,6	277,4	393,9
217,0	493,0	1,7	0,8	4,1	187,5	81,0	89,2	173,5	176,6	292,7	276,7	393,7
218,0	494,0	1,7	0,8	4,2	186,7	80,9	89,1	173,4	176,2	291,4	276,2	393,2
219,0	495,0	1,7	0,8	4,2	186,5	80,9	89,1	172,8	175,7	290,7	275,3	392,9
220,0	496,0	1,7	0,8	4,2	189,1	80,7	89,2	173,4	175,1	289,2	275,2	392,2
221,0	497,0	1,6	0,8	4,2	188,8	80,7	89,1	172,7	175,0	288,1	274,1	391,8
222,0	498,0	1,6	0,8	4,2	188,1	80,5	89,0	172,1	174,9	287,4	274,1	391,1
223,0	499,0	1,6	0,8	4,2	187,5	80,7	89,1	172,1	174,8	286,1	273,5	390,9
224,0	500,0	1,5	0,8	4,3	186,6	80,8	89,2	171,6	174,9	285,2	272,9	391,3
225,0	501,0	1,5	0,8	4,3	186,4	80,2	89,1	171,4	174,9	284,6	272,5	390,7
226,0	502,0	1,5	0,8	4,3	185,9	80,6	89,2	170,9	174,6	283,3	272,8	389,7
227,0	503,0	1,4	0,8	4,3	185,7	80,7	89,1	170,5	174,2	282,7	272,2	389,0
228,0	504,0	1,4	0,8	4,3	185,0	80,7	89,1	170,4	174,1	281,5	271,3	388,5
229,0	505,0	1,4	0,8	4,3	184,2	81,0	89,1	170,1	174,1	280,6	270,2	388,4
230,0	506,0	1,3	0,8	4,3	183,7	80,8	89,0	169,4	173,8	280,3	270,1	387,6
231,0	507,0	1,4	0,8	4,3	182,9	80,7	89,0	169,4	173,9	278,8	270,2	387,3
232,0	508,0	1,3	0,9	4,1	182,3	81,1	89,0	169,1	173,7	277,7	268,7	388,1
233,0	509,0	1,3	0,9	4,1	181,9	81,3	89,0	168,4	173,6	277,8	268,9	386,9
234,0	510,0	1,3	0,9	4,1	181,8	81,2	89,0	168,2	173,2	277,3	268,6	385,8
235,0	511,0	1,2	0,9	4,1	181,4	81,1	89,0	168,1	173,1	276,1	268,0	385,7
236,0	512,0	1,2	0,9	4,1	181,1	81,3	89,0	167,7	173,0	275,7	267,9	384,6
237,0	513,0	1,2	0,9	4,0	181,0	81,2	89,0	167,8	172,8	274,5	267,2	383,7
238,0	514,0	1,2	0,9	4,1	180,8	81,3	89,1	167,5	172,5	273,6	267,4	382,2
239,0	515,0	1,2	0,8	4,1	180,7	81,3	89,1	167,6	172,3	272,9	266,8	381,8
240,0	516,0	1,2	0,8	4,1	180,8	80,9	89,1	167,4	172,1	271,4	266,8	381,1
241,0	517,0	1,2	0,8	4,1	180,6	81,1	89,1	167,4	171,9	271,3	266,6	380,5
242,0	518,0	1,1	0,8	4,1	180,8	81,1	89,1	167,0	171,5	270,7	266,4	379,1
243,0	519,0	1,1	0,8	4,1	180,9	81,0	89,1	167,1	171,1	270,1	266,2	378,4
244,0	520,0	1,1	0,8	4,1	180,7	80,9	89,1	167,2	171,0	269,1	266,3	377,6
245,0	521,0	1,1	0,8	4,1	180,1	81,0	89,1	167,2	170,9	268,8	265,9	377,1
246,0	522,0	1,0	0,8	4,2	179,2	81,3	89,1	167,1	170,9	268,1	265,7	376,6
247,0	523,0	1,1	0,8	4,2	178,9	81,3	89,1	166,6	170,5	267,4	265,5	376,0
248,0	524,0	1,0	0,8	4,2	178,5	81,0	89,1	166,5	170,3	266,4	265,1	375,2
249,0	525,0	1,0	0,8	4,2	178,0	81,0	89,1	166,0	170,1	266,6	265,7	374,4
250,0	526,0	1,0	0,8	4,2	177,8	81,0	89,1	165,6	170,0	266,0	265,2	374,4
251,0	527,0	1,0	0,8	4,2	177,6	80,6	89,1	165,3	169,8	264,9	264,7	374,2
252,0	528,0	1,0	0,8	4,3	177,2	80,9	89,1	165,0	169,8	265,4	264,6	373,6
253,0	529,0	0,9	0,8	4,3	177,0	80,9	89,1	164,8	169,8	264,3	264,4	374,4
254,0	530,0	0,9	0,8	4,3	176,8	80,9	89,1	164,5	169,7	262,9	264,4	373,4
255,0	531,0	0,9	0,8	4,3	176,7	81,0	89,1	164,2	169,5	262,6	264,0	372,7
256,0	532,0	0,9	0,8	4,3	176,7	81,2	89,0	163,9	169,4	261,6	263,7	372,7
257,0	533,0	0,9	0,8	4,3	176,4	81,1	89,1	163,6	169,2	261,2	264,5	371,3
258,0	534,0	0,9	0,8	4,3	176,4	81,2	89,1	163,8	169,2	260,2	264,0	370,9
259,0	535,0	0,9	0,8	4,3	176,3	81,2	89,1	163,5	169,1	260,1	263,7	370,7
260,0	536,0	0,8	0,9	4,1	176,4	81,3	89,1	163,4	169,5	260,9	263,9	371,7
261,0	537,0	0,9	0,9	4,1	176,2	81,1	89,0	163,3	169,6	259,6	264,0	371,3
262,0	538,0	0,8	0,9	4,1	176,2	81,4	89,1	163,3	169,5	258,5	263,7	369,9
263,0	539,0	0,8	0,9	4,1	176,3	81,5	89,0	163,0	169,5	258,2	264,1	368,4
264,0	540,0	0,8	0,9	4,1	176,1	81,3	89,0	163,0	169,4	257,8	264,4	368,0
265,0	541,0	0,8	0,9	4,0	175,8	81,3	89,1	162,7	169,6	256,6	263,3	369,5
266,0	542,0	0,8	0,9	4,1	175,7	81,4	89,0	162,6	169,5	256,7	263,5	370,2
267,0	543,0	0,7	0,8	4,1	175,4	81,4	89,1	162,6	169,6	256,1	263,4	370,3
268,0	544,0	0,8	0,8	4,0	175,5	81,3	89,1	162,5	169,4	255,2	263,5	369,4
269,0	545,0	0,8	0,8	4,0	175,3	81,5	89,1	162,3	169,7	254,7	262,8	370,4
270,0	546,0	0,7	0,8	4,0	175,0	81,6	89,0	162,2	169,8	254,5	262,3	372,0
271,0	547,0	0,7	0,8	4,0	174,9	81,1	89,0	161,8	169,8	254,2	262,4	372,0
272,0	548,0	0,7	0,8	4,0	175,0	81,4	89,0	161,6	169,7	254,3	262,4	371,0
273,0	549,0	0,7	0,8	4,0	174,9	81,3	89,0	161,4	169,6	253,7	262,7	370,4
274,0	550,0	0,7	0,8	4,0	174,7	81,3	89,0	161,3	169,6	253,3	262,8	369,6
275,0	551,0	0,7	0,8	4,0	174,7	81,2	89,1	161,0	169,6	252,4	263,0	368,9
276,0	552,0	0,6	0,8	4,0	174,5	81,1	89,0	160,6	169,7	252,6	263,3	368,5
277,0	553,0	0,6	0,8	4,0	174,2	81,1	89,0	160,3	169,9	251,8	263,7	368,6
278,0	554,0	0,6	0,8	4,0	174,2	80,8	89,0	160,1	170,3	250,9	262,8	369,0
279,0	555,0	0,6	0,8	3,9	174,1	81,2	88,9	159,9	170,3	250,4	263,2	368,0
280,0	556,0	0,6	0,8	3,9	174,1	81,3	89,0	160,0	170,6	250,0	262,2	369,5
281,0	557,0	0,6	0,8	4,0	174,0	81,2	88,9	160,0	170,8	249,2	262,6	368,5
282,0	558,0	0,6	0,8	4,0	173,8	81,3	88,9	159,7	171,0	249,7	262,7	368,1
283,0	559,0	0,6	0,8	4,0	173,8	81,3	88,9	159,7	171,6	247,9	262,0	369,8
284,0	560,0	0,5	0,8	4,0	173,9	81,1	88,9	159,8	172,0	247,6	262,1	369,9
285,0	561,0	0,5	0,8	4,0	174,1	81,3	88,9	159,5	172,6	246,9	261,8	371,0
286,0	562,0	0,5	0,8	4,0	174,3	81,4	88,8	159,4	172,7	247,6	262,2	370,7
287,0	563,0	0,5	0,8	4,1	174,3	81,3	88,8	159,1	173,1	246,7	262,6	369,9
288,0	564,0	0,5	0,8	4,1	174,3	81,2	88,9	159,0	173,6	245,5	262,3	369,8
289,0	565,0	0,5	0,8	4,1	174,1	81,3	88,8	158,8	174,1	245,0	262,4	369,3
290,0	566,0	0,4	0,8	4,1	174,1	81,2	88,8	158,5	174,6	244,7	262,9	368,6
291,0	567,0	0,4	0,8	4,1	174,2	81,2	88,8	158,3	174,7	244,1	262,8	367,9
292,0	568,0	0,4	0,8	4,1	173,9	81,1	88,7	158,0	175,2	244,4	263,4	367,5
293,0	569,0	0,4	0,8	4,1	174,2	81,1	88,7	158,0	175,9	243,8	263,5	368,4
294,0	570,0	0,4	0,7	4,1	174,3	81,1	88,8	157,9	176,4	242,9	263,8	367,4
295,0	571,0	0,3	0,8	4,1	174,3	81,2	88,8	158,2	177,0	242,0	263,7	367,5
296,0	572,0	0,4	0,8	4,1	174,5	81,1	88,8	158,3	177,5	241,7	264,1	366,2
297,0	573,0	0,3	0,8	4,1	174,3	81,2	88,8	158,4	178,3	240,9	264,3	365,4
298,0	574,0	0,3	0,8	4,0	174,1	81,0	88,8	157,9	178,8	240,6	264,5	365,0
299,0	575,0	0,3	0,7	4,1	173,9	81,1	88,7	158,1	179,2	240,1	265,1	364,2
300,0	576,0	0,3	0,7	4,0	173,7	81,0	88,7	158,0	179,8	240,0	265,5	362,5
301,0	577,0	0,3	0,7	4,0	173,6	81,1	88,7	157,6	180,3	239,5	265,7	362,1

302,0	578,0	0,2	0,7	4,1	173,6	81,0	88,7	157,6	181,0	238,8	266,0	361,9
303,0	579,0	0,3	0,7	4,0	173,4	81,1	88,7	157,6	181,4	238,2	266,7	361,5
304,0	580,0	0,3	0,7	4,0	173,2	81,0	88,6	157,3	182,0	237,9	267,1	360,6
305,0	581,0	0,3	0,7	4,0	172,9	81,1	88,6	157,2	182,8	237,2	267,0	360,8
306,0	582,0	0,2	0,7	4,1	172,8	81,1	88,6	157,2	183,4	236,9	267,0	360,3
307,0	583,0	0,2	0,7	4,1	173,0	81,0	88,5	157,1	183,7	236,1	267,4	360,0
308,0	584,0	0,2	0,7	4,1	173,0	81,1	88,6	157,0	184,7	235,3	267,3	360,5
309,0	585,0	0,2	0,7	4,1	172,8	80,9	88,5	156,8	185,6	235,4	267,9	359,3
310,0	586,0	0,2	0,7	4,1	173,0	81,0	88,5	156,9	186,7	234,2	267,9	360,0
311,0	587,0	0,2	0,8	4,0	172,7	80,9	88,5	156,7	187,9	233,6	267,8	360,2
312,0	588,0	0,1	0,8	4,0	172,6	81,0	88,5	156,5	188,8	232,8	267,7	360,0
313,0	589,0	0,1	0,8	4,0	171,9	81,0	88,4	156,3	189,8	232,6	268,0	359,2
314,0	590,0	0,2	0,8	3,9	171,6	81,1	88,5	156,1	190,7	231,9	268,4	358,7
315,0	591,0	0,1	0,8	3,9	171,1	80,9	88,4	156,1	191,9	231,4	268,4	358,4
316,0	592,0	0,1	0,8	4,0	170,9	80,9	88,4	156,3	192,6	230,7	268,1	358,3
317,0	593,0	0,1	0,8	4,0	170,9	80,9	88,4	156,4	193,4	230,5	268,0	358,1
318,0	594,0	0,1	0,8	4,0	170,7	80,8	88,4	156,3	194,0	230,4	268,3	357,8
319,0	595,0	0,1	0,8	4,0	170,7	81,0	88,3	156,4	194,7	229,7	268,1	357,6
320,0	596,0	0,1	0,9	4,0	170,6	80,9	88,3	156,3	195,4	229,6	268,5	357,0
321,0	597,0	0,0	0,9	3,8	170,2	81,0	88,3	156,3	195,9	229,0	268,6	356,3

Manufacturer: IHP
Model: IRON STRIKE

Run: 2
Project #: PI 20165
Test Duration: 321 min

	HHV	LHV
Eff	69,37%	74,64%
Comb Eff	94,01%	94,01%
HT Eff	73,79%	79,40%
Output	16 679	kJ/h
Burn Rate	1,19	kg/h
Grams CO	573	g
Input	24 046	kJ/h
MC wet	18,54	

Note: In the “Input data”, "Calc. % O_2", "Fuel Properties", and “Mass Balance” columns, [e], [d], [g], [a]. [b], [c], [h], [u], [w], [j], and [k] refer to their respective variables in Clauses 13.7.3

Ultimate CO_2
$CO_{2\text{-ult}}$ 19,86
F_0
1,048

Overall Heating Efficiency:	69,37%	Air Fuel Ratio (A/F)		
Combustion Efficiency:	94,01%	Dry Molecular Weight (M_d)	29,47	
Heat Transfer Efficiency:	73,79%	Dry Moles Exhaust Gas (N_r):	567,55	
		Air Fuel Ratio (A/F)	16,21	

Heat Output:	15 822	Btu/h	16 679	kJ/h
Heat Input:	22 810	Btu/h	24 046	kJ/h
Burn Duration:	5,35	h		
Burn Rate:	2,62	lb/h	1,190	kg/h
Stack Temp:	285,0	Deg. F	140,6	Deg. C

POLYTESTS
TESTING THROUGH YOUR REALITY

Date: 2018-05-24 Manufacturer: IAP Model: Iron strike
Project #: PI 20165 Run: 2 Tech: M M Reviewer: DP

- Start Fan 1 minute torche
- close Door immediatly
- Fan off
At 25 LBS insert load (High)
At 156 LBS open Fan
At 39 LBS close Fan
At 200 LBS insert load (Low)
At 14 mis close air inlet progressivement
At 15 mis close air inlet complement
At 26 LBS open Fan

TEST LOAD CONFIGURATION

POLYTESTS
TESTING THROUGH YOUR REALITY

PRE / POST CHECKS

Date: 2018-05-24 Manufacturer: IHP Model: IRON strike

Project #: PI 20165 Run: 2 Tech: MM Reviewer: DL

	Equipment #	Time	12%	22%
Moisture Meter Calibration Check:	EM191	7:00	ok	ok

	Pre-Test	Post-Test
Facility Conditions:		
Air Velocity from less than 2 feet	6 (max50 Fpm)	3 (max50 Fpm)
Smoke Capture Check	ok	ok
Picture	4 sides ok	ok

Wood Heater Conditions:

Date Wood Heater Stack Cleaned	2018-05-23
Date Dilution Tunnel Cleaned	2018-05-23
Induced Draft Check (max 0.005 H2O)	OK
Traverse before ignition	ok

Temperature System:

Ambient (65°-90°F)	ok °F

Proportional Checks:

Thermocouple check	OK
Pitot Clean	ok
Pitot verification	ok

Sampling Train ID Numbers:

	~~High fire test~~			Medium low fire test		
	1st hour	Train 1	Train 2	1st hour	Train 1	Train 2
Probe				10	15	19
Filter Front				128	130	132
Filter Back				129	131	140
Filter Thermocouple				11	11	12
Filter (80°F ≥ <90°F)				ok	ok	ok

No

POLYTESTS
TESTING THROUGH YOUR REALITY

SAMPLING EQUIPMENT CHECK OUT

Date: 2018-05-24 Manufacturer: IAP Model: Mini Stack

Project #: pI 20165 Run: 2 Tech: MC Reviewer: MP

Leakage Checks Tunnel Samplers

High fire test	System 1st hour		System 1		System 2	
Unplugged Flow Rate = .25cfm	Pre-Test ASTM (-15) CSA B415 (-5)	Post-Test (max test)	Pre-Test ASTM (-15) CSA B415 (-5)	Post-Test (Max test)	Pre-Test ASTM (-15) CSA B415 (-5)	Post-Test (Max test)
Vacuum (inches Hg.)						
Final 1minute DGM (Liter)						
Initial 1minute DGM (Liter)						
Change © (Liter)						
Allowable leakage .04 x Sample rate or 0.28Lpm CSA B415 (0.56)						
Check OK						

Low medium fire test	System 1st hour		System 1		System 2	
Unplugged Flow Rate = .25cfm	Pre-Test ASTM (-15) CSA B415 (-5)	Post-Test (max test)	Pre-Test ASTM (-15) CSA B415 (-5)	Post-Test (Max test)	Pre-Test ASTM (-15) CSA B415 (-5)	Post-Test (Max test)
Vacuum (inches Hg.)	-15	-15	-15	-15	-15	-15
Final 1minute DGM (Liter)	678080,70	679966,96	678080,80	679965,02	630434,93	632076,41
Initial 1minute DGM (Liter)	678080,68	679966,95	678080,79	679965,01	630434,92	632076,41
Change © (Liter)	0,02	0,01	0,01	0,01	0,01	0
Allowable leakage .04 x Sample rate or 0.28Lpm CSA B415 (0.56)						
Check OK	OK	OK	OK	OK	OK	OK

POLYTESTS
TESTING THROUGH YOUR REALITY

SAMPLING EQUIPMENT CHECK OUT

Date: 2018-05-24 Manufacturer: IHP Model: IRON STRIKE

Project #: PI 20165 Run: 2 Tech: MM Reviewer: DP

Leakage Checks Flue Gas Sampler

Plugged Probe	Pre-Test	Post Test
Vacuum (inches Hg.)	-5	-5
Rotameter Reading (mml/min.)	0	0
Flow Rate (lpm)	1.5	1.5
Allowable (.02 x Sample Rate)	30	30
Check OK	OK	OK

Leakage Checks Pitot

Plugged Probe	Pre Test 3 H2o static	Pre Test 0.4-0.5 H2o velocity	Post Test 3 H2o Static	Post Test 0.4-0.5 H2o velocity
Vacuum (inches Hg.)	3	.4	3	.5
Check OK (no change after 15 sec.)	OK	OK	OK	OK

POLYTESTS
TESTING THROUGH YOUR REALITY

PRE-TEST SCALE AUDIT

Date: 2018-05-24 Manufacturer: IAP Model: IRON STRIKE

Project #: PT 2165 Run: 2 Tech: MR Reviewer: NP

Scale Type	Audit		Measured Weight
	Equipment #	Weight	
Platform	EM-090	44 lbs, Class F	44 lbs
Wood	EM-090	44 lbs, Class F	44 lbs
Analytical	EM-128	100 mg, Class S	100 mg
Analytical	EM-129	200 g, Class S	200 g

LIMITS OF WEIGHT RANGES

ANALYTICAL SCALE: ..... 50%-150% of dry filter weight, ± 0.1 mg
PLATFORM SCALE ..... 20%-80% of ideal test load weight, ± 0.1 lbs or 1%
WOOD SCALE ..... 20%-80% of ideal test load weight, ± 0.01 lbs or 1%

POLYTESTS
TESTING THROUGH YOUR REALITY

CONTINUOUS ANALYZERS

Date: 2018-05-24 Manufacturer: THp Model: Iron Strike
Project #: pI 20165 Run: 2 Tech: MM Reviewer: DP

FOR TUNNELS < 12 in

Barometric pressure (P_{bar}) 1016 (KPa.) Static pressure (P_q) 0,15 (inches w.c.)
Inside diameter: Port A 4.5" Port B ____.
Tunnel cross sectional area: .1963Ft²
Pitot tube type: Standard

Traverse Point	Position (inches)			Velocity Head Δ_p (inches H_2O)	Tunnel Temperature (°F)
	6 po	7 po	8 po		
A- Centroid	3.00	3.50	4	0053	8306
B - Centroid	3.00	3.50	4	0054	8204
A-1	0.40	0.50	0.50	0043	8302
A-2	1.50	1.75	2	0046	8292
A-3	4.50	5.25	6	0054	8280
A-4	5.60	6.5	7.5	0042	8270
B-1	0.40	0.50	0.50	0043	8248
B-2	1.50	1.75	2	0054	8200
B-3	4.50	5.25	6	0052	8178
B-4	5.60	6.5	7.5	0043	8152
				AVERAGE	

$$v_s = K_p C_p (\sqrt{\Delta p})_{avg} \sqrt{\frac{(T_s)_{avg}}{P_s M_s}}$$

Where,
C_p = pitot tube coefficient, dimension less = 0.99 for standard pitot.
Δ_p = manometer reading (inches H_2O)
T_s = average absolute dilution tunnel temperature (°F + 460)
P_s = absolute dilution tunnel gas pressure or $P_{bar} + P_{qg}$
P_q = static pressure $\frac{\text{in. } H_2O}{\{13.6\}}$
M_s = 28.56, wet molecular weight of stack gas (alternatively, it may be measured)
K_p = 85.49 pitot tube constant, (conversion factor for English units)

_$\Delta_p$avg. = average of the square roots of the velocity heads (Δ_p) measured at each traverse point.

POLYTESTS
TESTING THROUGH YOUR REALITY

CONTINUOUS ANALYZERS

Date: 2018-05-24 Manufacturer: IHP Model: Iron stride

Project #: ~~pI 2015~~ pI 20165 Run: 2 Tech: MM Reviewer: DP

Pre-Test (Adjust and Record)

	ZERO		SPAN		CAL. (Record Only)	
CO	0	0	2.980	~~180~~ 3,00	0.988	1,00
Tolerance CO		+/- 0.02		+/- 0.15		+/- 0.05
CO_2	0	0	18.02	~~300~~ 18,00	9.81	10,00
Tolerance CO2		+/- 0.02		+/- 0.5		+/- 0.5
O_2 informative CSA B415 calculated value	na	na	na	na	na	na
	Actual	Should Be	Actual	Should Be	Actual	Should Be

Post Test (Record Only)

	Zero	Span	Cal.	Zero Drift	Limit	Span Drift	Limit	Cal. Drift	Limit	OK?	Not OK*
CO	0	2.986	0.991	0	0.02	0.006	0.15	0.003	0.05	✓	
CO_2	0	18.01	9.86	0	0.02	0.01	0.5	0.05	0.5	✓	

POLYTESTS
TESTING THROUGH YOUR REALITY

TEST DATA LOG

Date: 2018-05-24 Manufacturer: IAP Model: IRON STRIKE
Project #: PI 20165 Run: 2 Tech: MM Reviewer: DP

RAW DRY GAS METER READINGS

		System 1	System 2	Blank
High fire test	Final (Liter)			
	Initial (Liter)			
Low medium fire test	Final (Liter)	679664,09	632075,58	671,41
	Initial (Liter)	678081,07	630437,40	654,36

AMBIENT CONDITIONS

	Before	After
Barometer (kPa):	101,6	101
Dry Bulb (F):	78,8	86,01
Humidity (%):	31,9	26,5

POLYTESTS
TESTING THROUGH YOUR REALITY

FUEL DATA

Date: 2018-05-24 Manufacturer: IHP Model: IRON STRIKE
Project #: PI 20165 Run: 2 Tech: MM Reviewer: DO

FUEL DESCRIPTION:

Type of wood:

KINDLING AND START-UP LOAD

Piece Size			Weight		Meter Moisture Content (% dry)				
x	x 16	in.	2.784	lbs.	93	96.4	90	91	94
x	x 16	in.	4.388	lbs.	194	199	196	193	192
x	x	in.		lbs.					
x	x	in.		lbs.					
x	x	in.		lbs.					
x	x	in.		lbs.					
x	x	in.		lbs.					
x	x	in.		lbs.					
x	x	in.		lbs.					

HIGHFIRE TEST LOAD

Piece Size			Weight		Meter Moisture Content (% dry)				
3.50 x 3.50	x 16	in.	3.018	lbs.	25.1	23.9	23.6	22.8	22.7
3.75 x 3.00	x 16	in.	3.156	lbs.	25.7	24.3	22.8	22.0	22.7
3.50 x 3.25	x 16	in.	3.064	lbs.	19.1	19.4	19.8	19.4	19.6
x	x	in.		lbs.					
3.75 x 4.00	x 16	in.	5.84	lbs.	24	23.8	22.6	22.4	21.9
x	x	in.		lbs.					
x	x	in.		lbs.					
x	x	in.		lbs.					
x	x	in.		lbs.					

POLYTESTS
TESTING THROUGH YOUR REALITY

FUEL DATA

Date: 2018 05-24 Manufacturer: IKEA Model: IKEA SMÅKLE

Project #: pI 2015 Run: 2 Tech: MM Reviewer: SO

FUEL DESCRIPTION:

Type of wood:

LOW OR MEDIUM TEST LOAD

Piece Size	Weight	Meter Moisture Content (% dry)				
350 x 350 x 16 in.	~~3644~~ 3056 lbs.	19.6	19.3	19.8	20.0	19.9
350 x 350 x 16 in.	~~3542~~ 3699 lbs.	20.3	20.4	19.2	19.1	19.6
400 x 375 x 16 in.	3572 lbs.	24.3	24.6	23.9	23.3	24.0
x x in.	lbs.					
425 x 425 x 16 in.	4994 lbs.	26.4	26.3	25.1	24.4	24.3
325 x 325 x 16 in.	~~3094~~ 1972 lbs.	26.3	25.1	24.6	23.7	24.0
x x in.	lbs.					
x x in.	lbs.					
x x in.	lbs.					
x x in.	lbs.					
x x in.	lbs.					
x x in.	lbs.					
x x in.	lbs.					
x x in.	lbs.					

POLYTESTS
TESTING THROUGH YOUR REALITY

DILUTION TUNNEL PARTICULATE SAMPLER DATA

Date:_____ Manufacturer:_____ Model:_____

Project #:_____ Run:_____ Tech:_____ Reviewer:_____

		HIGHFIRE TEST FILTERS								
		SYSTEM 1 – 1st hour				SYSTEM 1				
Pre-test Weight Record		Probe & Housing Number	Front Filter Number	Back Filter Number	gaskets	Probe & Housing Number	Front Filter Number	Back Filter Number	gaskets	Blanck
Date	Time									

		SYSTEM 1 – 1st hour				SYSTEM 1				
Post-test Weight Record		Probe & Housing Number	Front Filter Number	Back Filter Number	gaskets	Probe & Housing Number	Front Filter Number	Back Filter Number	gaskets	Blanck
Date	Time									

DILUTION TUNNEL PARTICULATE SAMPLER DATA

Date:_____ Manufacturer:_____ Model:_____

Project #: _____ Run:_____ Tech:_____ Reviewer:_____

		HIGH FIRE TEST FILTERS			
		SYSTEM 2			
Pre-test Weight Record		Probe & Housing Number	Front Filter Number	Back Filter Number	gaskets
Date	Time				

		SYSTEM 2			
Post-test Weight Record		Probe & Housing Number	Front Filter Number	Back Filter Number	gaskets
Date	Time				

POLYTESTS
TESTING THROUGH YOUR REALITY

DILUTION TUNNEL PARTICULATE SAMPLER DATA

Date: 2018-05-23 Manufacturer: TIP Model: Non strike

Project #: PI 2015 Run: 2 Tech: MM Reviewer: DO

		LOW OR MEDIUM TEST FILTERS								
		SYSTEM 1 – 1st hour				SYSTEM 1				
Pre-test Weight Record		Probe & Housing Number	Front Filter Number	Back Filter Number	gaskets	Probe & Housing Number	Front Filter Number	Back Filter Number	gaskets	Blanck
Date	Time	10	128	129	15	15	130	131	25	141
2018-05-23	18:00	94,6409	0,0840	0,0838	35,4990	108,7837	0,0835	0,0838	34,9441	0,0839
2018-05-24	9:00	94,6409	0,0840	0,0838	35,4989	108,7837	0,0835	0,0838	34,9442	0,0839

		SYSTEM 1 – 1st hour				SYSTEM 1				
Post-test Weight Record		Probe & Housing Number	Front Filter Number	Back Filter Number	gaskets	Probe & Housing Number	Front Filter Number	Back Filter Number	gaskets	Blanck
Date	Time	10	128	129	15	15	130	131	25	141
2018-05-24	18:00	94,6410	0,0849	0,0837	35,5013	108,7844	0,1033	0,0842	34,9456 ~~34,9456~~	0,0841
2018-06-04	8:00	94,6410	0,0846	0,0834	35,5010	108,7844	0,1023	0,0839	34,9453	0,0841
2018-06-13	8:00	94,6410	0,0846	0,0834	35,5010	108,7844	0,1023	0,0838	34,9453	0,0841

POLYTESTS
TESTING THROUGH YOUR REALITY

DILUTION TUNNEL PARTICULATE SAMPLER DATA

Date: 2018-05-23 Manufacturer: IHP Model: 1100 Strike

Project #: PT 20165 Run: 2 Tech: MR Reviewer: DP

		LOW OR MEDIUM FIRE TEST FILTERS			
		SYSTEM 2			
Pre-test Weight Record		Probe & Housing Number	Front Filter Number	Back Filter Number	gaskets
Date	Time	19	132	140	29
2018-05-23	18:00	109 0921	00837	00838	35 2128
2018-05-24	9:00	109 0922	00837	00838	35 2129

		SYSTEM 2			
Post-test Weight Record		Probe & Housing Number	Front Filter Number	Back Filter Number	gaskets
Date	Time	19	132	140	29
2018-05-24	18:00	109 0930	01043	00835	35 2168
2018-06-04	8:00	109 0929	01039	00833	35 2159
2018-06-13	8:00	109 0929	01039	00833	35 2159

Paramètres

Tous les facteurs de corrections et autres paramètres qui peuvent être modifiés par l'utilisateur du fichier sont regroupés ici.

Code verrouillage:	IHP

Description du test

Test standard	EPA	
Run #	3	
Date	25-05-2018	
Technicien	M.M	
Project #	PI 20165	

Description de l'unité

Manufacturier	IHP	
Modèle	IRON STRIKE	
Combustion system	Non-Cat	
Appliance type	wood stove	
Firebox volume	1,51	cu ft.
Appliance weight empty	n.a	lbs
Fan (no, Standard, Option)	optional	

Paramètres du test

Logging time	1	min
Manufacturer's rated heat output	n.a	BTU/h Donnée fournie par le manfacturier
Targeted category	1	
Targeted output	n.a	BTU/h
Cp steel	n.a	BTU/lb-°F

Échantillonnage

Blank sampling rate	0,20	cuft/min
Internal probe diameter	0,18	in.
Calibration Factor (DGM #1):	0,988	Dimensionless
Equipment number (DGM #1):	em 178	
Calibration Factor (DGM #2):	0,991	Dimensionless
Equipment number (DGM #2):	em 179	
Calibration Factor (DGM #3):	0,996	
Equipment number (DGM #3):	em 070	Dimensionless

Tunnel

Targeted tunnel flow rate	300	scfm
Tunnel diameter	8	in.
Molecular weight	28,78	May be assumed to be 28,78 (EPA) Si B-415 = 29
Pitot tube type	Standard	
Pitot tube coefficient	0,99	Dimensionless

Project nu.	PI 20165
Date	25-05-2018
Technicien	m.m

Fuel data

Fuel type	Cord	
Fuel specie	Oak	
HHV	20207,0	kJ/kg
%C	49,5	
%H	6,6	
%O	43,7	
%Ash	0,2	
HHV	8689,9	Btu/lb
LHV	7600,4	Btu/lb

Default Fuel Values

	D. Fir	Oak/Maple
HHV	19 810	20 207
%C	48,73	49,5
%H	6,87	6,62
%O	43,9	43,7
%Ash	0,5	0,2
HHV (Btu/lb)	8519	8690
LHV (Btu/lb)	7451	7600

Adjunct to ASTM E XXXX Wood Heater Cordwood Test Method - May 10, 2017 Version

Cordwood Fuel Load Calculators - 10 lb/ft^3 Nominal Load Density

Core 45-65% of Total Load Weight, Remainder 35-55% of Total Load Weight

Values to be input manually

For All Usable Firebox Volumes - High Fire Test Only

Nominal Required Load Density (wet basis)	10	lb/ft^3				
Usable Firebox Volume	1,51	ft^3				
Total Nom. Load Wt. Target	15,10	lb				
Total Load Wt. Allowable Range	14,30	to	15,90	lb		
Core Target Wt. Allowable Range	6,80	to	9,80	lb		
Remainder Load Wt. Allowable Range	5,30	to	8,30	lb		
						Mid-Point
Core Load Pc. Wt. Allowable Range	2,30	to	3,80	lb		3,05
Remainder Load Pc. Wt. Allowable Range	1,50	to	8,30	lb		4,90
	Pc. #					
Core Load Piece Wt. Actual	1	3,19	lb	In Range		
	2	3,15	lb	In Range		
	3	3,26	lb	In Range		
Core Load Total. Wt. Actual		9,60	lb	In Range		
	Pc. #					
Remainder Load Piece Wt.	1	6,00	lb	In Range		
(1 to 3 Pcs.)	2		lb	NA		
	3		lb	NA		
Remainder Load Tot. Wt. Act		6,00	lb	In Range		
Total Load Wt. Actual		15,60	lb	In Range		
Core % of Total Wt.		62%		In Range		45-65%
Remainder % of Total Wt.		38%		In Range		35-55%
Actual Load % of Nominal Target		103%		In Range		95-105%
Actual Fuel Load Density		10,3	lb/ft^3			
Kindling and Start-up Fuel						
Maximim Kindling Wt. (20% of Tot. Load Wt.)		3,12	lb			
Actual Kindling Wt.		2,86	lb	In Range		18,3%
Maximum Start-up Fuel Wt. (30% of Tot. Load Wt.)		4,68	lb			
Actual Start-up Fuel Wt.		4,34	lb	In Range		27,8%
Allowable Residual Start-up Fuel Wt. Range	1,6	to	3,1	lb		Mid-Point
Actual Residual Start-up Fuel Wt.		2,7	lb	In Range		2,3
Total Wt. All Fuel Added (wet basis)		22,80	lb			
High Fire Test Run End Point Range	Low		High			Mid-Point
Based on Fuel Load Wt. (w/tares)	1,4	to	1,7	lb		1,6
Actual Fuel Load Ending Wt.		1,5	lb	In Range		

Load pieces Length in. 16 in.

Fuel Piece Moisture Reading (%-dry basis)						Pc. Wt. Dry Basis		
1	2	3	Ave.					
23,1	19,6	21,6	21,4	In Range		2,63 lb	1,19 kg	
19,6	20,1	19,5	19,7	In Range		2,63 lb	1,19 kg	
19,3	21,6	20,6	20,5	In Range		2,71 lb	1,23 kg	
19,6	21	19,7	20,1	In Range		5,00 lb	2,27 kg	
			NA	NA		NA lb	NA kg	
			NA	NA		NA lb	NA kg	
Total Load Ave. MC (%-dry basis)			20,4	In Range				
Total Load Ave. MC % (wet basis)			16,9					
Total Test Load Weight (dry basis)						12,96 lb	5,88 kg	
Kindling Moisture (%-dry basis)								
9,6	9	9,1	9,2	In Range		2,62 lb	1,19 kg	
Start-up Fuel Moisture Readings (%-dry basis)								
19,1	19,6	19,9	19,5	In Range		3,63 lb	1,65 kg	
Total Wt. All Fuel Added (dry basis)						19,21 lb	8,71 kg	
Total Wt. All Fuel Burned (dry basis)						15,0 lb	6,8 kg	

Load high fire

Adjunct to ASTM E XXXX Wood Heater Cordwood Test Method - May 10, 2017 Version

Cordwood Fuel Load Calculators - 12 lb/ft^3 Nominal Load Density

Core 45-65% of Total Load Weight, Remainder 35-55% of Total Load Weight

Values to be input manually

THIS DOCUMENT IS NOT AN ASTM STANDARD; IT IS UNDER CONSIDERATION WITHIN AN ASTM TECHNICAL COMMITTEE BUT HAS NOT RECEIVED ALL APPROVALS REQUIRED TO BECOME AN ASTM STANDARD. IT SHALL NOT BE REPRODUCED OR CIRCULATED OR QUOTED, IN WHOLE OR IN PART, OUTSIDE OF ASTM COMMITTEE ACTIVITIES EXCEPT WITH THE APPROVAL OF THE CHAIRMAN OF THE COMMITTEE HAVING JURISDICTION AND THE PRESIDENT OF THE SOCIETY. *COPYRIGHT ASTM, 100 BARR HARBOR DRIVE, WEST CONSHOHOCKEN, PA 19428. ALL RIGHTS RESERVED.*

For Usable Firebox Volumes up to 3.0 ft^3 - Low and Medium Fire

Nominal Required Load Density (wet basis)	12	lb/ft^3				
Usable Firebox Volume	1,51	ft^3				
Total Nom. Load Wt. Target	18,12	lb				
Total Load Wt. Allowable Range	17,21	to	19,03	lb		
Core Target Wt. Allowable Range	8,154	to	11,78	lb		
Remainder Load Wt. Allowable Range	6,34	to	9,97	lb		
						Mid-Point
Core Load Fuel Pc. Wt. Allowable Range	2,72	to	4,53	lb		3,62
Remainder Load Pc. Wt. Allowable Range	1,81	to	5,44	lb		3,62
	Pc. #					
Core Load Piece Wt. Actual	1	3,07	lb	In Range		
	2	3,40	lb	In Range		
	3	3,66	lb	In Range		
Core Load Total. Wt. Actual		10,13	lb	In Range		
	Pc. #					
Remainder Load Piece Wt.	1	4,98	lb	In Range		
(2 or 3 Pcs.)	2	2,13	lb	In Range		
	3		lb	NA		
Remainder Load Piece Weight Ratio - Small/Large		43%		In Range		≤ 67%
Remainder Load Tot. Wt. Act		7,11	lb	In Range		
Total Load Wt. Actual		17,24	lb	In Range		
Core % of Total Wt.		59%		In Range		45-65%
Remainder % of Total Wt.		41%		In Range		35-55%
Actual Load % of Nominal Target		95%		In Range		95-105%
Actual Fuel Load Density		11,4	lb/ft^3			
Allowable Charcoal Bed Wt. Range (lb)	1,8	to	3,4			Mid-Point
Actual Charcoal Bed Wt.		2,0	lb	In Range		2,6
Actual Fuel Load Ending Wt.		0,0	lb	Valid Test		≥ 90%
Total Wt. of Fuel Burned During Test Run lb.		17,2	lb			
Load pieces Length in.		16	in.			

Fuel Piece Moisture Reading (%-dry basis)

1	2	3	Ave.		Pc. Wt. Dry Basis			
19,1	19,4	19,5	19,3	In Range	2,57	lb	1,17	kg
22,3	19,8	21	21,0	In Range	2,81	lb	1,27	kg
19,9	20,6	19,2	19,9	In Range	3,05	lb	1,38	kg
19,9	20,4	19,8	20,0	In Range	4,15	lb	1,88	kg
19,1	19,7	19,9	19,6	In Range	1,78	lb	0,81	kg
			NA	NA	NA	lb	NA	kg

Total Load Ave. MC % (dry basis)	20,0	In Range		
Total Load Ave. MC % (wet basis)	16,7			
Total Test Load Weight (dry basis) →			14,36 lb	6,51 kg
Total Fuel Weight Burned During Test Run (dry basis)			14,4 lb	6,51 kg

For Usable Firebox Volumes above 3.0 ft^3 - Low and Medium Fire

Nominal Required Load Density (wet basis)	12	lb/ft^3				
Usable Firebox Volume		ft^3				
Total Nom. Load Wt. Target	0	lb				
Total Load Wt. Allowable Range	0,00	to	0,00	lb		
Core Target Wt. Allowable Range	0,00	to	0,00	lb		
Remainder Load Wt. Allowable Range	0,00	to	0,00	lb		
						Mid-Point
Core Load Fuel Pc. Wt. Allowable Range	0,00	to	0,00	lb		0,00
Remainder Load Pc. Wt. Allowable Range	0,00	to	0,00	lb		0,00
	Pc. #					
Core Load Piece Wt. Actual	1		lb	In Range		
	2		lb	In Range		
	3		lb	In Range		
Core Load Total. Wt. Actual		0,00	lb	In Range		
	Pc. #					
Remainder Load Piece Wt.	1		lb	In Range		
(3 or 4 Pcs.)	2		lb	In Range		
	3		lb	In Range		
	4		lb	NA		
Remainder Load Piece Weight Ratio - Small/Large		#NOMBRE!		#NOMBRE!		≤ 67%
Remainder Load Tot. Wt. Act		0,00	lb	In Range		
Total Load Wt. Actual		0,00	lb	In Range		
Core % of Total Wt.		#DIV/0!		#DIV/0!		45-65%
Remainder % of Total Wt.		#DIV/0!		#DIV/0!		35-55%
Actual Load % of Nominal Target		#DIV/0!		#DIV/0!		95-105%
Actual Fuel Load Density		#DIV/0!	lb/ft^3			
Allowable Charcoal Bed Wt. Range (lb)	0,1	to	-0,1			Mid-Point
Actual Charcoal Bed Wt.			lb	Out of Range		0,0
Actual Fuel Load Ending Wt.			lb	Valid Test		≥ 90%
Total Wt. of Fuel Burned During Test Run lb.		0,0	lb			

Fuel Piece Moisture Reading (%-dry basis)

1	2	3	Ave.		Pc. Wt. Dry Basis			
			#DIV/0!	#DIV/0!	#DIV/0!	lb	#DIV/0!	kg
			#DIV/0!	#DIV/0!	#DIV/0!	lb	#DIV/0!	kg
			#DIV/0!	#DIV/0!	#DIV/0!	lb	#DIV/0!	kg
			#DIV/0!	#DIV/0!	#DIV/0!	lb	#DIV/0!	kg
			#DIV/0!	#DIV/0!	#DIV/0!	lb	#DIV/0!	kg
			#DIV/0!	#DIV/0!	#DIV/0!	lb	#DIV/0!	kg
			NA	NA	NA	lb	NA	kg

Total Load Ave. MC % (dry basis)	#DIV/0!	#DIV/0!		
Total Load Ave. MC % (wet basis)	#DIV/0!			
Total Test Load Weight (dry basis) →			#DIV/0! lb	#DIV/0! kg
Total Fuel Weight Burned During Test Run (dry basis)			#DIV/0! lb	#DIV/0! kg

	Start	End
Barometer (kPa):	100,5	100
Barometer (in.Hg):	29,677639	29,52998888
Dry Bulb (F):	81,68	84,74
Humidity (%):	32,4	28,8
Air velocity (ft/min)	4	9

High fire test						
DGM #1	Final:	0,000	cuft	Final:		Liter
	Initial:	0,000	cuft	Initial:		Liter
DGM #2	Final:	0,000	cuft	Final:		Liter
	Initial:	0,000	cuft	Initial:		Liter
DGM room				Final:		cuft
				Initial:		cuft

min or med burnrate						
DGM #1	Final:	24062,325	cuft	Final:	681369,150	Liter
	Initial:	24002,188	cuft	Initial:	679666,260	Liter
DGM #2	Final:	22384,018	cuft	Final:	633844,780	Liter
	Initial:	22321,657	cuft	Initial:	632078,930	Liter
DGM room				Final:	700,850	cuft
				Initial:	671,410	cuft

Numéro de la ligne dans "Raw data" à partir duquel les données du test commence	
Numéro de la ligne dans "Raw data" à partir duquel les données du highfire test commence	
Numéro de la ligne dans "Raw data" à partir duquel les données du min ou medium fire test commence	163

Autres données à rentrer: dans preload data, load data, traverse et filter set weight

Project nu.	PI 20165
Date	25-05-2018
Technicien	mm

Tunnel Traverse Worksheet (for velocity calculations)

Static Pressure: 0,14 in. H20
Barometer: 29,678 in. Hg

Pour un tunnel de 12" et plus, prendre 6 lectures

	TUNNEL VELOCITY	TUNNEL TEMP	SQUARE ROOT
	In. wc	°F	
A center			0,0000
B center			0,0000
A1			0,0000
A2			0,0000
A3			0,0000
A4			0,0000
A5			0,0000
A6			0,0000
B1			0,0000
B2			0,0000
B3			0,0000
B4			0,0000
B5			0,0000
B6			0,0000
AVERAGE	#DIV/0!	#DIV/0!	0,0000

PITOT CONSTANT=
0,955

Pour un tunnel moins de 12", prendre 4 lectures

	TUNNEL VELOCITY	TUNNEL TEMP	SQUARE ROOT
	In. wc	°F	
A center	0,050	79,28	0,2236
B center	0,051	78,36	0,2258
A1	0,040	78,9	0,2000
A2	0,047	78,99	0,2168
A3	0,058	78,78	0,2408
A4	0,039	78,64	0,1975
B1	0,040	78,300	0,2000
B2	0,049	78,330	0,2214
B3	0,048	78,270	0,2191
B4	0,040	78,210	0,2000
AVERAGE	0,0462	78,6060	0,2145

Project nu.	PI 20165
Date	25-05-2018
Technicien	mm

Filter set weight Low/ medium fire

	System 1 (g) 1st hour				System 1 (g)				System 2 (g)				Ambient blank (g)	Date	Heure
	probe	front	back	gasket	probe	front	back	gasket	probe	front	back	gasket	Filter		
Number	18	142	143	1	31	145	146	14	42	147	148	30	149		
Before (1)															
Before (2)															
Before (3)															
Before (4)															
Before (5)	108,9466	0,0836	0,0842	35,3585	110,1282	0,0841	0,0844	34,2535	110,3103	0,0835	0,0839	34,2097	0,0850	2018-05-24	18:00
Before (6)	108,9466	0,0836	0,0842	35,3585	110,1282	0,0841	0,0844	34,2535	110,3103	0,0835	0,0839	34,2097	0,0850	2018-05-25	08:00
After (1)	108,9468	0,0859	0,0839	35,3612	110,1285	0,0839	0,0847	34,2555	110,3106	0,0859	0,0837	34,2131	0,0851	2018-05-25	17:00
After (2)	108,9468	0,0856	0,0838	35,3604	110,1285	0,0837	0,0844	34,2547	110,3106	0,0852	0,0838	34,2118	0,0850	2018-06-04	08:00
After (3)	108,9468	0,0855	0,0838	35,3604	110,1285	0,0836	0,0843	34,2547	110,3106	0,0852	0,0838	34,2118	0,0850	2018-06-13	08:00
After (4)															
After (5)															
After (6)	108,9468	0,0855	0,0838	35,3604	110,1285	0,0836	0,0843	34,2542	110,3106	0,0852	0,0838	34,2118	0,0850	2018-06-13	08:00
Difference	0,0002	0,0019	-0,0004	0,0019	0,0003	-0,0005	-0,0001	0,0007	0,0003	0,0017	-0,0001	0,0021	0,0000		
Total (mg)		3,6				4				4			0		
Total ajusté (mg)		**3,60**				**4,00**				**4,00**					

Project nu.	PI 20165
Date	25-05-2018
Technicien	mm

SFBA EPA EMISSION RESULTS

Test Duration: **340** min

PRESSURE FACTOR:	DGM 1	0,95969	
	DGM 2	0,95933	
	DGM 3	0,98943	
TEMPERATURE FACTORS	DGM 1	0,97144	
	DGM 2	0,97045	
	DGM 3	0,97680	
VOLUMES SAMPLED	DGM 1	55,418	SCft
	DGM 2	57,557	Scft
	DGM 3	28,332	SCft

TOTAL TUNNEL VOLUME : 97159

SAMPLE RATIOS

Sample Train 1:	1753,195
Sample Train 2:	1688,029

Paticulate concentration

Sample Train 1	**0,000072**	g/dscf
Sample Train 2	**0,000069**	g/dscf
Room	**0,000000**	g/dscf

TOTAL EMISSIONS

Sample Train 1	**7,01**	g
Sample Train 2	**6,75**	g

EMISSION RATES

Sample Train 1	**1,24**	g/hr
Sample Train 2	**1,19**	g/hr

1st hour emission rate **6,31** g/hr

	Train 1	Train 2
Cs	7,218E-05	6,9496E-05

RESULTS

Average emission rate: 1,21 g/hr

Burn Rate : 1,150 Dry kg/hr

BAROMETRIC PRESSURE

Average:	29,60381386	in Hg
Start:	29,67763883	in Hg
End:	29,52998888	in Hg

DGM CONTROLLER VALUES

DGM 1	Final:	24062,325	Cuft
	Initial:	24002,188	Cuft
DGM 2	Final:	22384,018	Cuft
	Initial:	22321,657	Cuft
DGM #3	Final:	700,850	Cuft
	Initial:	671,410	Cuft

TEMPERATURES

DGM 1	543,525	°R
DGM 2	544,076	°R

CALIBRATION FACTORS

DGM 1	0,9885
DGM 2	0,9914
DGM #3	0,9958

TUNNEL FLOW RATE: 285,761 Dscfm

PARTICULATE CATCH

Total Sample Train 1:	4,00	mg
Total Sample Train 2:	4,00	mg
Total Sample Train 1 1st hour:	3,60	mg

DEVIATION: 1,89%

Elapsed		Weight			Flue	Room	Tunnel	Unit	Unit	Unit	Unit	Unit
Time	Raw data row	Remaining	CO	CO_2	Gas	Temp	Dry Bulb	Top	Back	R.Side	L.Side	Bottom
min		lbs	%	%	°F	°F	°F	°F	°F	°F	°F	°F
0,00	163,00	17,2	0,1	4,6	414,6	80,0	137,5	547,0	451,5	487,6	528,5	572,1
1,0	164,0	16,8	0,3	8,0	621,1	80,1	141,0	595,3	454,2	490,9	523,9	577,4
2,0	165,0	16,6	0,1	11,8	757,2	80,2	155,1	664,1	455,7	493,8	519,2	581,6
3,0	166,0	16,1	0,1	16,2	871,5	80,3	170,4	742,2	454,7	493,5	515,9	583,7
4,0	167,0	15,8	0,2	18,3	902,4	80,5	174,4	804,5	452,4	493,2	512,7	585,5
5,0	168,0	15,4	0,2	16,6	850,8	80,9	165,6	843,3	451,1	493,0	509,9	587,0
6,0	169,0	15,1	0,2	16,7	839,0	80,7	163,0	876,0	448,5	491,0	507,4	588,1
7,0	170,0	14,9	0,2	16,9	841,2	81,2	162,7	902,4	445,9	489,7	505,1	588,4
8,0	171,0	14,5	0,2	17,0	825,7	81,0	160,1	923,7	443,6	488,2	503,1	588,1
9,0	172,0	14,2	0,3	16,2	767,6	81,6	150,9	929,5	440,9	486,5	502,0	588,4
10,0	173,0	13,9	0,3	15,6	744,6	81,6	147,0	932,5	438,0	484,2	501,7	588,0
11,0	174,0	13,8	0,2	15,6	733,6	81,4	146,9	936,4	436,3	482,6	501,5	587,6
12,0	175,0	13,5	0,2	15,6	728,6	81,9	145,0	939,4	434,0	480,3	501,6	586,8
13,0	176,0	13,2	0,2	15,8	727,2	82,1	144,0	943,0	431,9	478,9	502,0	585,8
14,0	177,0	12,9	0,8	16,1	693,9	81,2	137,4	943,0	428,7	476,5	502,0	584,8
15,0	178,0	12,8	0,5	15,8	644,9	81,4	131,2	930,5	427,3	475,2	502,3	584,0
16,0	179,0	12,5	0,2	14,7	618,2	81,6	127,7	912,6	425,6	473,9	501,8	583,3
17,0	180,0	12,3	0,1	14,3	599,8	81,2	125,0	899,4	422,4	472,3	501,9	582,2
18,0	181,0	12,1	0,1	14,2	588,8	81,8	122,5	885,5	420,2	469,4	501,5	581,0
19,0	182,0	12,0	0,1	14,1	581,8	81,1	123,2	875,5	417,4	467,5	500,2	579,1
20,0	183,0	11,8	0,1	14,2	577,2	81,1	122,6	869,3	416,0	465,1	499,5	577,1
21,0	184,0	11,6	0,1	14,2	573,8	81,7	121,2	864,0	413,8	462,7	498,5	576,0
22,0	185,0	11,4	0,1	14,2	570,9	81,4	120,0	860,7	411,8	461,4	498,0	573,9
23,0	186,0	11,2	0,1	14,3	568,1	81,8	120,4	858,3	410,2	459,2	497,3	571,8
24,0	187,0	11,0	0,1	14,1	565,2	81,6	120,6	854,3	408,2	458,1	497,2	569,8
25,0	188,0	10,9	0,1	14,1	563,3	81,5	120,0	854,1	406,7	455,7	496,8	567,2
26,0	189,0	10,7	0,1	14,1	562,5	81,8	120,2	853,3	405,2	454,0	496,4	565,2
27,0	190,0	10,5	0,1	14,4	562,0	81,8	119,1	854,1	403,3	452,5	496,2	563,0
28,0	191,0	10,4	0,3	14,4	561,3	81,8	119,9	856,0	402,7	451,4	495,8	561,0
29,0	192,0	10,2	0,4	14,5	559,3	81,8	119,2	855,3	400,6	449,7	495,9	558,6
30,0	193,0	10,0	0,1	14,6	561,2	81,9	118,5	857,3	399,2	447,9	495,9	555,8
31,0	194,0	9,9	0,3	14,7	565,1	81,8	119,3	860,2	398,2	447,0	495,8	553,7
32,0	195,0	9,7	0,4	15,1	566,9	81,9	119,2	863,0	397,0	445,9	496,4	551,2
33,0	196,0	9,5	0,5	15,4	568,6	81,5	119,4	867,0	395,6	445,5	496,9	548,8
34,0	197,0	9,3	0,5	15,4	569,4	81,5	119,2	869,6	396,0	443,6	497,9	546,8
35,0	198,0	9,2	0,5	15,2	559,2	81,9	116,2	780,4	342,3	433,5	497,0	544,1
36,0	199,0	9,0	0,3	14,6	545,4	81,9	114,8	748,9	316,5	429,3	495,5	540,9
37,0	200,0	8,9	0,2	14,3	533,5	81,8	113,8	722,4	298,4	426,7	494,0	538,2
38,0	201,0	8,7	0,1	13,9	523,4	81,9	113,5	699,5	284,8	423,8	491,8	535,7
39,0	202,0	8,5	0,2	14,0	517,8	82,1	113,2	681,8	274,1	422,7	490,3	533,2
40,0	203,0	8,4	0,2	14,2	513,4	82,2	113,2	668,2	266,0	420,1	488,2	531,7
41,0	204,0	8,2	0,2	13,6	505,5	81,5	112,5	652,4	258,5	418,1	487,0	529,6
42,0	205,0	8,1	0,0	12,7	494,2	82,1	111,4	634,4	253,2	416,6	485,4	527,3
43,0	206,0	8,0	0,0	11,3	480,0	82,3	110,4	610,3	247,6	414,7	483,6	525,6
44,0	207,0	7,9	0,0	10,8	467,8	82,0	109,5	589,0	243,4	413,6	482,2	523,4
45,0	208,0	7,8	0,0	10,3	456,1	82,2	108,3	566,4	240,4	411,6	480,4	521,6
46,0	209,0	7,7	0,0	9,8	444,4	81,9	107,4	546,3	237,3	411,2	479,3	518,8
47,0	210,0	7,7	0,0	9,5	433,5	81,8	106,8	526,9	234,2	410,0	477,7	516,3
48,0	211,0	7,6	0,0	9,1	424,0	81,9	106,0	511,2	231,5	409,8	475,7	514,1
49,0	212,0	7,5	0,0	8,9	415,3	82,1	105,3	496,9	229,1	407,9	473,6	511,8
50,0	213,0	7,4	0,1	8,7	407,5	81,9	104,5	481,7	226,9	407,5	471,2	509,1
51,0	214,0	7,4	0,1	8,5	400,2	81,8	103,7	469,6	224,6	406,1	469,2	506,0
52,0	215,0	7,3	0,2	8,0	391,0	81,8	103,1	454,4	222,7	405,6	467,1	503,3
53,0	216,0	7,2	0,2	7,8	382,8	81,6	102,5	440,7	221,2	404,8	463,9	500,9
54,0	217,0	7,1	0,2	7,6	375,6	81,6	102,0	427,2	219,7	404,3	461,4	498,2
55,0	218,0	7,1	0,2	7,5	370,7	81,4	101,5	415,9	218,4	403,4	458,6	495,2
56,0	219,0	7,0	0,2	7,6	366,5	81,0	101,1	404,9	217,0	402,3	456,3	492,4
57,0	220,0	6,9	0,2	7,6	363,3	81,3	100,9	394,9	215,4	402,4	454,2	489,9
58,0	221,0	6,9	0,2	7,4	358,1	81,1	100,3	388,8	213,8	400,0	452,7	487,5
59,0	222,0	6,8	0,3	7,2	352,4	81,2	100,2	378,9	212,1	398,9	450,5	485,1
60,0	223,0	6,8	0,3	7,0	346,7	81,0	99,2	369,4	211,2	397,6	447,1	483,0
61,0	224,0	6,7	0,3	6,9	341,5	81,1	98,5	361,1	210,2	396,6	443,6	480,8
62,0	225,0	6,7	0,3	6,8	338,2	81,0	98,0	353,6	209,1	395,0	440,5	477,7
63,0	226,0	6,6	0,3	6,8	335,0	81,2	97,7	346,8	208,1	393,8	437,0	475,7
64,0	227,0	6,6	0,3	6,8	332,7	80,9	97,0	341,9	206,9	392,4	434,1	473,1
65,0	228,0	6,5	0,4	7,0	330,8	81,1	97,6	337,2	206,2	390,9	430,5	471,4
66,0	229,0	6,4	0,4	7,0	329,1	80,9	96,8	332,9	205,0	389,0	428,5	468,7
67,0	230,0	6,4	0,4	6,9	326,5	81,1	97,4	328,7	203,7	387,0	425,5	466,9
68,0	231,0	6,3	0,4	6,9	325,2	80,8	97,0	325,9	202,3	385,9	423,7	464,4
69,0	232,0	6,2	0,4	6,8	324,1	80,9	97,0	322,7	201,4	383,7	421,1	463,0
70,0	233,0	6,2	0,4	6,9	323,2	80,7	96,7	320,2	200,6	381,8	418,7	461,1
71,0	234,0	6,2	0,4	6,8	322,3	80,9	96,6	318,4	199,4	380,7	416,5	459,6
72,0	235,0	6,1	0,4	6,8	321,8	80,9	96,4	316,8	198,9	380,8	414,3	458,3
73,0	236,0	6,1	0,4	6,9	321,4	80,5	96,4	315,0	198,2	378,6	412,6	456,2
74,0	237,0	6,0	0,4	6,9	320,3	80,7	96,2	313,7	197,1	375,8	410,4	454,8
75,0	238,0	5,9	0,4	6,9	320,0	80,8	96,4	312,6	196,7	374,3	408,2	453,3
76,0	239,0	5,9	0,4	7,1	319,4	80,6	96,3	311,0	195,9	373,4	406,5	452,0
77,0	240,0	5,8	0,4	7,0	318,9	80,4	95,7	310,3	195,1	371,8	405,1	450,4
78,0	241,0	5,8	0,4	7,0	319,3	80,7	95,7	309,7	194,7	372,3	403,2	449,2
79,0	242,0	5,7	0,4	7,1	319,2	80,7	95,4	308,5	194,0	370,9	402,3	447,5
80,0	243,0	5,6	0,4	7,1	318,6	80,4	95,3	307,2	193,4	369,7	401,0	446,1
81,0	244,0	5,6	0,4	7,2	318,8	80,5	95,3	306,5	192,9	368,8	399,8	444,6
82,0	245,0	5,5	0,4	7,3	319,5	80,5	95,2	306,3	192,5	367,6	398,2	443,8
83,0	246,0	5,5	0,4	7,5	321,5	80,4	95,0	307,1	191,9	366,9	397,0	442,7
84,0	247,0	5,5	0,4	7,5	323,1	80,4	94,8	308,8	191,6	365,5	396,3	441,2
85,0	248,0	5,4	0,3	7,7	323,9	80,6	94,7	309,8	191,2	366,6	395,4	440,2
86,0	249,0	5,3	0,3	7,7	325,1	80,5	94,7	311,2	191,1	364,0	394,8	439,0
87,0	250,0	5,3	0,3	7,9	326,1	80,7	95,2	311,4	190,7	363,3	394,5	437,7
88,0	251,0	5,2	0,3	7,8	326,7	80,5	95,2	313,1	190,6	362,6	394,5	436,3
89,0	252,0	5,2	0,3	7,9	326,8	80,5	95,0	313,9	190,4	361,5	394,0	435,4
90,0	253,0	5,1	0,3	7,9	326,6	80,6	95,0	313,5	190,5	362,5	393,3	434,5
91,0	254,0	5,0	0,3	7,9	326,8	80,7	95,2	314,4	190,3	360,3	393,4	433,3
92,0	255,0	5,0	0,3	7,8	325,7	80,6	95,0	314,3	190,6	359,8	392,9	432,5
93,0	256,0	4,9	0,3	7,7	324,9	80,6	95,0	312,3	190,6	361,0	392,7	432,0
94,0	257,0	4,9	0,3	7,7	324,5	80,7	94,9	311,9	190,7	360,0	392,2	430,9
95,0	258,0	4,8	0,3	7,7	323,7	80,7	95,0	311,5	191,1	359,7	391,7	430,3
96,0	259,0	4,8	0,3	7,7	322,6	80,6	94,5	311,2	190,9	357,8	391,6	429,0
97,0	260,0	4,7	0,3	7,7	321,1	80,4	94,5	310,1	191,2	357,2	390,9	428,7
98,0	261,0	4,7	0,3	7,7	320,6	80,6	94,5	309,2	191,0	357,6	390,6	428,1

99,0	262,0	4,6	0,3	7,7	319,8	80,7	94,5	307,5	190,9	357,7	390,7	427,2
100,0	263,0	4,5	0,3	7,6	318,7	80,7	94,3	306,4	190,9	357,2	390,9	426,7
101,0	264,0	4,5	0,3	7,6	317,9	80,4	94,0	305,7	191,0	356,9	390,9	425,9
102,0	265,0	4,4	0,3	7,7	316,4	80,5	94,4	304,3	190,9	356,7	390,9	425,7
103,0	266,0	4,3	0,3	7,7	315,8	80,4	94,2	303,3	190,9	357,1	390,7	424,9
104,0	267,0	4,3	0,3	7,6	314,7	80,5	94,2	302,6	191,2	356,0	390,9	424,4
105,0	268,0	4,3	0,3	7,5	313,4	80,3	94,0	301,0	191,1	355,9	390,4	423,9
106,0	269,0	4,2	0,3	7,6	313,6	80,4	94,1	300,4	191,7	355,2	390,5	423,4
107,0	270,0	4,2	0,3	7,7	314,0	80,4	94,0	300,3	191,8	354,3	390,1	423,0
108,0	271,0	4,1	0,3	7,7	315,1	80,6	94,0	300,0	191,9	354,9	390,1	422,8
109,0	272,0	4,0	0,3	7,7	316,0	80,5	94,0	301,1	191,6	354,8	390,5	422,4
110,0	273,0	4,0	0,3	7,9	316,8	80,6	93,9	302,2	191,7	354,3	390,6	422,1
111,0	274,0	3,9	0,3	7,9	317,3	80,4	93,8	302,6	191,6	354,4	390,7	422,2
112,0	275,0	3,9	0,3	8,0	317,9	80,5	94,0	304,1	191,6	353,9	390,8	421,6
113,0	276,0	3,8	0,3	8,0	317,3	80,4	94,1	304,7	192,0	353,5	390,9	421,4
114,0	277,0	3,8	0,3	7,9	318,2	80,4	94,0	303,8	192,5	354,5	390,4	421,2
115,0	278,0	3,7	0,2	7,9	318,4	80,4	94,2	304,2	192,8	354,2	390,6	420,9
116,0	279,0	3,6	0,3	7,9	318,5	80,4	94,2	304,4	193,4	355,0	390,6	421,1
117,0	280,0	3,6	0,2	8,0	319,7	80,4	94,3	306,0	193,6	354,1	390,9	420,1
118,0	281,0	3,5	0,3	8,0	319,7	80,4	94,3	306,9	194,1	353,7	390,8	420,2
119,0	282,0	3,5	0,2	7,9	319,9	80,4	94,2	307,5	194,3	354,5	391,2	419,4
120,0	283,0	3,4	0,3	8,0	320,1	80,3	94,3	308,2	194,9	354,3	390,9	419,5
121,0	284,0	3,4	0,3	8,1	320,7	80,4	94,2	309,0	195,2	353,8	391,3	419,2
122,0	285,0	3,3	0,3	8,1	321,0	80,5	94,4	308,9	195,4	354,3	391,3	419,5
123,0	286,0	3,3	0,3	8,1	322,2	80,4	94,3	309,6	195,7	354,8	391,1	419,0
124,0	287,0	3,2	0,3	8,2	326,3	80,4	94,5	314,5	195,6	354,3	391,6	418,9
125,0	288,0	3,1	0,3	7,9	331,1	80,5	94,7	318,5	196,2	355,6	391,8	418,6
126,0	289,0	3,1	0,3	8,1	336,6	80,4	95,1	323,8	196,1	355,8	391,8	418,0
127,0	290,0	3,0	0,3	8,5	343,8	80,5	95,2	331,1	196,6	355,8	391,6	417,7
128,0	291,0	2,9	0,2	8,9	351,1	80,6	95,6	338,9	197,3	355,8	391,4	418,1
129,0	292,0	2,8	0,2	9,2	356,1	80,4	95,9	346,4	197,6	357,3	393,1	417,0
130,0	293,0	2,8	0,2	9,2	358,8	80,6	96,1	354,6	198,1	357,3	393,4	417,4
131,0	294,0	2,7	0,2	8,9	355,8	80,2	96,0	356,2	199,0	357,1	394,2	417,0
132,0	295,0	2,7	0,3	8,2	348,9	80,6	95,3	352,3	199,0	356,9	394,2	416,3
133,0	296,0	2,6	0,3	7,6	340,1	80,3	94,9	345,7	199,7	357,0	393,3	416,4
134,0	297,0	2,6	0,4	7,1	330,7	80,6	94,7	338,5	199,8	357,0	392,6	416,3
135,0	298,0	2,5	0,4	6,6	320,5	80,5	94,1	329,1	200,0	358,4	391,5	416,0
136,0	299,0	2,5	0,5	6,2	311,9	80,6	93,7	320,3	200,0	356,6	389,6	416,2
137,0	300,0	2,5	0,5	5,8	303,0	80,6	93,3	311,1	199,6	355,2	387,7	416,2
138,0	301,0	2,4	0,7	5,4	294,3	80,4	93,0	301,8	199,0	355,4	386,5	415,7
139,0	302,0	2,4	0,8	5,3	287,8	80,6	92,8	293,4	198,0	355,0	384,3	416,1
140,0	303,0	2,4	0,9	5,0	281,6	80,6	92,3	285,0	197,6	354,3	382,0	416,5
141,0	304,0	2,3	0,9	4,7	275,6	80,4	92,0	276,8	197,4	353,3	380,3	416,9
142,0	305,0	2,3	1,0	4,7	270,0	80,4	91,8	270,3	196,5	351,9	378,5	416,2
143,0	306,0	2,3	1,0	4,6	265,6	80,6	91,4	263,7	195,9	352,5	375,9	416,4
144,0	307,0	2,3	1,0	4,6	262,1	80,5	91,1	258,3	195,2	350,7	374,2	415,9
145,0	308,0	2,2	1,0	4,6	258,2	80,5	91,2	252,9	194,3	349,0	372,1	416,2
146,0	309,0	2,2	0,9	4,6	255,1	80,5	90,9	248,2	193,6	347,6	370,3	415,9
147,0	310,0	2,2	1,0	4,6	252,1	80,4	90,3	244,2	193,3	346,0	368,5	415,3
148,0	311,0	2,2	0,9	4,6	249,4	80,4	90,5	240,2	192,8	343,6	366,5	415,3
149,0	312,0	2,2	0,9	4,5	246,7	80,3	90,4	236,4	192,6	341,4	364,4	415,0
150,0	313,0	2,2	1,0	4,5	243,9	80,1	90,4	233,2	193,0	340,5	362,4	415,0
151,0	314,0	2,2	1,0	4,4	241,3	80,4	90,2	230,0	192,7	339,4	360,9	414,6
152,0	315,0	2,2	1,0	4,4	239,1	80,3	90,0	227,1	192,7	336,8	358,9	414,5
153,0	316,0	2,1	1,0	4,4	237,5	80,2	89,8	224,8	193,0	335,3	357,3	413,9
154,0	317,0	2,2	1,0	4,4	235,6	80,0	89,8	221,8	192,9	334,0	354,8	413,8
155,0	318,0	2,1	1,0	4,4	234,0	80,4	89,3	219,6	193,0	333,3	353,9	412,3
156,0	319,0	2,1	1,0	4,3	232,4	80,4	89,2	217,4	193,2	331,5	352,0	412,0
157,0	320,0	2,1	1,0	4,4	230,8	80,4	89,4	215,6	193,4	329,7	349,7	412,1
158,0	321,0	2,0	0,9	4,3	229,1	80,3	89,2	213,4	193,1	327,8	348,5	411,0
159,0	322,0	2,0	0,9	4,4	228,0	80,2	89,2	211,6	193,3	327,1	347,2	410,2
160,0	323,0	2,0	0,9	4,4	227,0	80,0	89,1	210,1	193,3	325,5	345,8	409,5
161,0	324,0	2,0	0,9	4,4	226,0	80,3	88,8	208,7	193,6	323,7	343,7	408,4
162,0	325,0	2,0	0,9	4,4	224,9	80,3	88,6	206,8	194,0	322,8	341,9	408,3
163,0	326,0	2,0	0,9	4,5	223,6	80,2	88,7	205,7	194,1	321,1	341,2	407,3
164,0	327,0	1,9	0,9	4,5	222,7	80,3	88,6	204,7	194,2	319,6	339,8	406,3
165,0	328,0	1,9	1,0	4,5	221,8	80,3	88,2	203,4	194,6	317,9	338,8	405,2
166,0	329,0	1,9	1,0	4,5	221,3	80,2	88,3	202,4	195,0	316,0	337,4	404,5
167,0	330,0	1,9	1,0	4,5	220,3	80,2	88,4	201,5	195,5	315,0	336,0	404,0
168,0	331,0	1,9	1,0	4,5	218,9	80,3	88,4	200,9	195,7	313,4	334,6	403,2
169,0	332,0	1,8	1,0	4,6	218,7	80,2	88,3	200,1	196,3	313,0	333,3	402,4
170,0	333,0	1,8	1,0	4,5	217,8	80,2	88,4	199,5	196,8	312,0	332,4	401,7
171,0	334,0	1,8	1,0	4,5	216,6	80,1	88,2	198,1	197,3	310,8	331,3	400,5
172,0	335,0	1,9	1,0	4,5	216,0	80,2	88,2	197,3	197,8	308,9	330,1	399,7
173,0	336,0	1,8	1,0	4,5	215,5	80,1	88,1	197,1	198,3	307,7	328,6	399,1
174,0	337,0	1,8	1,0	4,5	214,5	80,2	88,1	195,9	198,9	307,4	328,0	398,7
175,0	338,0	1,8	1,0	4,6	213,9	80,0	87,9	195,2	199,7	306,7	326,6	397,5
176,0	339,0	1,7	1,0	4,6	213,5	80,1	87,9	194,7	200,8	305,3	325,6	397,5
177,0	340,0	1,7	1,0	4,5	213,1	80,1	87,8	193,9	201,1	304,2	324,6	396,9
178,0	341,0	1,7	1,0	4,5	213,1	80,1	87,9	193,5	201,9	303,3	323,4	396,5
179,0	342,0	1,7	1,0	4,5	212,4	80,1	87,8	193,1	202,6	302,2	322,2	395,8
180,0	343,0	1,7	0,9	4,5	211,9	80,2	87,7	192,8	203,1	301,3	321,2	395,5
181,0	344,0	1,6	1,0	4,4	211,5	80,2	87,6	192,1	204,1	301,5	320,5	394,7
182,0	345,0	1,7	0,9	4,5	211,1	80,2	87,7	191,5	204,9	300,3	319,3	394,4
183,0	346,0	1,7	0,9	4,5	210,4	80,2	87,6	191,0	205,2	300,4	319,6	393,1
184,0	347,0	1,6	0,9	4,4	209,7	80,2	87,6	190,4	205,7	299,5	318,4	392,6
185,0	348,0	1,6	0,9	4,5	209,5	80,3	87,6	190,1	206,6	298,1	316,8	392,2
186,0	349,0	1,6	0,9	4,4	209,2	80,3	87,4	189,4	206,9	297,0	316,0	391,3
187,0	350,0	1,6	0,9	4,4	208,7	80,3	87,5	189,4	207,5	296,5	314,9	391,3
188,0	351,0	1,6	0,9	4,3	208,2	80,2	87,2	188,5	208,0	297,1	314,1	390,1
189,0	352,0	1,6	0,9	4,4	207,3	80,3	87,4	188,3	208,8	295,7	313,2	390,0
190,0	353,0	1,5	0,9	4,4	206,7	80,3	87,4	188,2	209,4	294,1	311,9	389,7
191,0	354,0	1,5	0,9	4,3	206,7	80,1	87,4	187,7	210,5	293,1	310,7	389,3
192,0	355,0	1,5	0,9	4,3	206,3	80,3	87,2	187,2	210,9	291,9	309,9	388,5
193,0	356,0	1,5	0,9	4,4	205,9	80,3	87,1	187,0	211,1	292,3	309,0	388,2
194,0	357,0	1,5	0,9	4,3	205,6	80,3	87,1	186,4	211,9	291,7	307,8	388,0
195,0	358,0	1,5	0,9	4,3	205,0	80,3	87,2	186,3	212,2	290,8	307,1	387,3
196,0	359,0	1,5	0,9	4,3	204,6	80,4	87,1	186,0	212,7	289,7	306,7	385,8
197,0	360,0	1,4	1,0	4,3	204,0	80,3	87,1	185,4	213,2	289,0	305,4	385,5
198,0	361,0	1,4	0,9	4,2	203,5	80,2	87,2	185,3	213,5	288,1	305,0	384,9
199,0	362,0	1,4	0,9	4,3	203,3	80,3	87,1	184,6	214,0	287,8	303,9	384,0
200,0	363,0	1,4	0,9	4,3	202,6	80,2	87,1	184,1	214,0	287,1	303,5	382,8

201,0	364,0	1,4	0,9	4,2	202,3	80,3	87,2	183,8	214,3	286,1	302,6	382,4
202,0	365,0	1,4	0,9	4,3	201,9	80,2	87,1	183,6	214,8	285,2	302,1	381,0
203,0	366,0	1,3	0,9	4,2	201,5	80,2	87,0	183,3	214,8	284,6	301,3	380,2
204,0	367,0	1,3	0,9	4,3	201,3	80,1	87,1	183,5	215,2	283,6	300,4	379,5
205,0	368,0	1,3	0,9	4,3	201,4	80,1	87,1	182,7	215,4	283,6	299,4	378,9
206,0	369,0	1,3	0,9	4,2	201,2	80,1	86,8	182,6	215,7	283,0	298,8	377,6
207,0	370,0	1,3	0,9	4,3	200,9	80,2	87,0	182,2	215,7	283,3	298,6	377,0
208,0	371,0	1,3	0,9	4,3	200,5	80,2	87,0	182,3	215,9	282,1	297,6	376,4
209,0	372,0	1,2	0,9	4,3	200,2	80,1	87,0	182,2	216,4	280,7	297,2	375,7
210,0	373,0	1,2	0,9	4,3	200,1	80,2	87,1	182,1	216,9	280,4	296,6	375,2
211,0	374,0	1,2	0,9	4,3	199,7	80,2	87,0	181,9	217,1	279,8	295,7	374,6
212,0	375,0	1,2	0,9	4,3	199,6	80,1	87,0	181,9	217,0	279,0	295,4	374,2
213,0	376,0	1,2	0,9	4,3	199,3	80,1	87,0	181,0	217,1	278,9	294,7	373,4
214,0	377,0	1,2	0,9	4,3	199,3	80,1	87,0	181,3	217,0	278,2	294,1	372,4
215,0	378,0	1,2	0,9	4,3	199,1	80,1	86,9	181,0	217,5	277,3	293,5	371,7
216,0	379,0	1,2	0,9	4,3	198,8	80,1	87,0	180,6	217,7	276,8	293,0	371,1
217,0	380,0	1,2	0,9	4,3	198,6	80,1	87,0	180,7	217,5	276,0	292,4	370,3
218,0	381,0	1,1	0,9	4,2	198,5	80,1	86,9	180,5	217,8	275,9	291,7	369,7
219,0	382,0	1,1	0,9	4,2	198,1	80,1	86,8	180,3	217,9	275,5	291,4	369,3
220,0	383,0	1,1	1,0	4,1	198,2	80,1	86,8	180,6	217,9	275,1	290,9	368,8
221,0	384,0	1,1	1,1	4,1	198,0	80,1	86,8	180,7	218,2	274,7	290,0	368,0
222,0	385,0	1,1	1,0	4,1	197,8	80,0	86,8	180,4	218,1	273,8	289,8	366,6
223,0	386,0	1,0	1,0	4,1	197,3	80,1	87,0	180,4	218,5	272,8	289,3	365,8
224,0	387,0	1,0	1,0	4,1	197,3	80,1	86,9	180,0	218,3	273,0	288,6	365,1
225,0	388,0	1,1	1,0	4,1	197,1	80,1	86,5	179,8	218,7	273,1	288,0	364,7
226,0	389,0	1,0	1,0	4,2	196,6	79,9	86,8	179,5	218,7	272,6	287,6	363,9
227,0	390,0	1,0	1,0	4,1	196,2	80,0	86,8	179,1	218,8	271,9	286,8	363,3
228,0	391,0	1,0	0,9	4,1	195,3	80,0	86,5	178,5	218,5	271,9	286,3	362,9
229,0	392,0	1,0	0,9	3,7	194,5	80,0	86,6	178,1	217,9	271,8	285,9	362,3
230,0	393,0	1,0	0,9	3,7	193,6	80,0	86,6	177,3	218,0	271,6	285,5	361,7
231,0	394,0	0,9	0,9	3,7	192,4	80,1	86,5	176,7	217,6	271,0	284,8	361,2
232,0	395,0	1,0	0,9	3,6	191,5	80,0	86,6	175,7	217,2	270,1	284,3	360,2
233,0	396,0	0,9	0,9	3,5	190,8	79,9	86,4	175,0	217,0	270,2	284,0	359,0
234,0	397,0	1,0	0,8	3,5	190,0	79,9	86,5	174,5	216,5	269,7	283,3	358,1
235,0	398,0	0,9	0,9	3,6	189,6	80,1	86,7	174,1	216,1	269,8	283,1	357,4
236,0	399,0	0,9	0,9	3,6	189,2	80,1	86,5	173,8	215,8	268,1	282,1	356,4
237,0	400,0	0,9	0,9	3,5	188,6	80,0	86,3	173,3	215,6	267,5	281,5	355,3
238,0	401,0	0,9	0,8	3,4	187,2	80,0	86,3	171,6	215,3	267,0	280,6	354,8
239,0	402,0	0,8	0,7	3,1	185,9	80,0	86,2	170,1	215,1	267,7	280,0	354,8
240,0	403,0	0,8	0,8	3,2	184,6	80,0	86,3	169,2	214,5	265,9	279,3	353,4
241,0	404,0	0,8	0,7	3,2	183,3	80,0	86,3	168,0	213,9	266,2	278,8	352,7
242,0	405,0	0,8	0,7	3,2	182,4	80,0	86,2	167,2	213,8	264,8	277,8	352,5
243,0	406,0	0,8	0,8	3,2	181,6	80,1	86,1	166,6	213,0	264,3	277,3	351,9
244,0	407,0	0,8	0,8	3,2	180,6	80,1	86,0	165,6	212,8	262,8	276,4	351,1
245,0	408,0	0,8	0,8	3,2	179,7	80,1	86,1	164,7	212,3	263,6	275,3	350,1
246,0	409,0	0,8	0,8	3,2	179,3	80,0	86,0	163,6	211,8	263,2	274,9	349,3
247,0	410,0	0,8	0,8	3,1	178,4	80,1	86,0	163,2	211,1	261,8	273,9	347,6
248,0	411,0	0,8	0,8	3,2	177,6	80,2	86,0	162,7	210,9	260,4	272,7	347,3
249,0	412,0	0,7	0,8	3,2	176,9	80,0	86,0	161,8	210,4	260,0	271,8	346,6
250,0	413,0	0,7	0,8	3,2	176,1	80,1	86,0	161,2	210,2	259,8	270,6	346,3
251,0	414,0	0,7	0,8	3,2	175,7	79,9	85,9	160,5	209,5	258,8	269,7	345,0
252,0	415,0	0,7	0,8	3,1	175,2	80,0	85,9	160,1	209,4	257,7	268,4	344,8
253,0	416,0	0,7	0,8	3,2	174,5	80,0	85,7	159,6	209,0	256,8	267,6	343,6
254,0	417,0	0,7	0,8	3,1	174,2	80,0	85,7	158,9	208,3	256,6	266,5	342,7
255,0	418,0	0,7	0,8	3,1	173,6	80,0	85,8	158,2	208,0	256,1	265,6	341,6
256,0	419,0	0,7	0,8	3,0	173,0	80,1	85,9	158,0	207,6	255,2	264,3	341,5
257,0	420,0	0,7	0,8	3,1	172,4	80,1	85,8	157,2	206,9	255,9	263,7	340,9
258,0	421,0	0,7	0,8	3,1	171,8	80,2	85,8	156,5	206,7	254,5	262,4	340,1
259,0	422,0	0,7	0,8	3,1	171,6	80,2	85,8	156,3	206,6	253,4	261,1	339,7
260,0	423,0	0,7	0,8	3,1	170,9	80,2	85,7	155,9	205,9	253,2	260,3	338,9
261,0	424,0	0,6	0,8	3,0	170,5	80,2	85,6	155,3	205,7	252,8	259,3	338,2
262,0	425,0	0,6	0,8	3,1	170,1	80,3	85,6	155,1	205,2	252,1	258,4	337,8
263,0	426,0	0,6	0,8	3,1	169,8	80,3	85,6	154,8	205,4	251,1	256,9	337,2
264,0	427,0	0,6	0,8	3,0	169,4	80,2	85,5	154,2	204,9	251,2	256,3	336,4
265,0	428,0	0,6	0,8	3,1	168,9	80,3	85,6	153,6	204,6	250,6	255,4	335,8
266,0	429,0	0,6	0,8	3,0	168,3	80,3	85,6	153,2	204,5	249,5	254,2	334,3
267,0	430,0	0,6	0,8	3,0	167,6	80,4	85,7	152,5	204,3	249,0	253,5	333,7
268,0	431,0	0,6	0,8	3,0	167,1	80,3	85,6	152,0	204,2	248,2	252,5	333,0
269,0	432,0	0,5	0,8	3,0	166,6	80,3	85,6	151,6	204,1	247,3	251,5	332,2
270,0	433,0	0,6	0,8	3,0	166,0	80,4	85,6	151,3	203,9	246,4	250,3	331,5
271,0	434,0	0,6	0,8	2,9	165,8	80,3	85,5	150,7	203,9	246,6	250,0	330,7
272,0	435,0	0,5	0,8	3,0	165,2	80,3	85,5	150,5	203,8	245,3	248,8	329,9
273,0	436,0	0,5	0,8	3,0	164,8	80,3	85,5	150,1	203,6	245,6	248,2	329,2
274,0	437,0	0,5	0,8	3,0	164,4	80,3	85,4	149,7	203,7	244,3	247,3	328,5
275,0	438,0	0,5	0,8	3,1	164,0	80,4	85,3	149,7	203,8	243,7	246,3	327,6
276,0	439,0	0,5	0,8	3,1	163,9	80,3	85,3	149,3	203,4	242,6	245,6	326,1
277,0	440,0	0,5	0,8	3,1	163,5	80,3	85,4	148,8	203,3	242,5	244,9	325,1
278,0	441,0	0,5	0,8	3,1	163,3	80,3	85,5	148,5	202,8	240,7	244,4	324,1
279,0	442,0	0,5	0,8	3,1	162,7	80,4	85,3	148,3	203,5	240,4	243,4	323,7
280,0	443,0	0,5	0,8	2,9	162,3	80,3	85,3	148,0	203,2	240,8	243,1	322,9
281,0	444,0	0,4	0,8	2,9	161,7	80,4	85,3	147,8	203,1	239,2	241,9	322,1
282,0	445,0	0,4	0,8	2,9	161,2	80,4	85,4	147,5	203,3	239,0	241,6	321,6
283,0	446,0	0,4	0,8	2,9	160,8	80,4	85,2	147,3	203,3	237,9	240,4	320,7
284,0	447,0	0,4	0,8	2,8	160,3	80,2	85,2	147,0	203,0	237,3	239,7	319,1
285,0	448,0	0,4	0,8	2,9	159,9	80,3	85,2	146,6	203,0	237,0	239,1	318,7
286,0	449,0	0,4	0,8	2,9	159,8	80,2	85,1	146,6	202,5	236,0	238,2	318,0
287,0	450,0	0,4	0,8	2,8	159,3	80,3	85,0	146,5	202,7	235,3	237,5	317,6
288,0	451,0	0,4	0,8	2,8	159,1	80,3	85,1	146,4	202,6	235,1	237,0	316,8
289,0	452,0	0,4	0,8	2,8	158,7	80,3	85,1	145,9	202,2	234,4	236,2	316,2
290,0	453,0	0,3	0,8	2,8	158,5	80,3	85,0	145,9	202,1	233,7	235,4	315,4
291,0	454,0	0,3	0,8	2,9	158,3	80,3	85,0	145,5	201,6	233,7	235,0	314,6
292,0	455,0	0,3	0,8	2,9	157,9	80,3	85,0	145,2	201,5	232,7	234,1	314,0
293,0	456,0	0,3	0,8	2,9	157,7	80,4	85,0	144,9	201,2	232,2	233,3	313,4
294,0	457,0	0,3	0,8	2,9	157,3	80,4	85,1	144,7	201,2	231,7	232,5	312,7
295,0	458,0	0,3	0,8	2,9	157,1	80,3	84,9	144,3	200,8	230,9	231,9	312,0
296,0	459,0	0,3	0,8	2,9	156,9	80,4	85,0	144,2	200,7	230,8	231,2	311,3
297,0	460,0	0,3	0,9	3,0	156,8	80,4	84,9	144,0	200,8	230,6	231,1	310,4
298,0	461,0	0,3	0,8	2,9	156,5	80,4	84,9	143,9	200,0	230,0	230,4	309,7
299,0	462,0	0,3	0,9	2,9	156,4	80,4	84,8	143,6	200,2	229,7	229,6	309,0
300,0	463,0	0,3	0,9	3,0	156,3	80,3	84,9	143,6	199,5	229,6	229,3	307,4
301,0	464,0	0,3	0,9	3,0	156,2	80,4	84,9	143,5	199,6	228,9	228,6	307,0
302,0	465,0	0,3	0,9	3,1	156,6	80,4	84,9	143,7	199,3	228,4	227,8	306,2

303,0	466,0	0,3	0,9	3,1	156,6	80,3	84,8	143,8	199,2	228,1	227,1	305,7
304,0	467,0	0,2	0,9	3,1	156,7	80,4	84,7	143,8	198,9	227,5	226,7	305,1
305,0	468,0	0,3	0,9	3,1	156,7	80,4	84,8	143,8	198,8	227,4	226,5	304,4
306,0	469,0	0,2	0,9	3,1	156,6	80,3	84,8	143,8	198,6	227,3	226,2	303,8
307,0	470,0	0,3	0,9	3,1	156,6	80,3	84,8	143,8	198,3	226,9	225,8	303,1
308,0	471,0	0,2	0,9	3,1	156,5	80,4	84,8	143,9	197,9	227,0	225,3	302,5
309,0	472,0	0,2	0,9	3,1	156,5	80,3	84,8	143,9	197,9	226,4	224,7	301,9
310,0	473,0	0,2	0,9	3,1	156,7	80,3	84,8	143,8	197,7	226,7	224,5	300,9
311,0	474,0	0,2	0,9	3,0	156,6	80,3	84,8	144,0	197,3	226,1	223,9	300,4
312,0	475,0	0,2	0,9	3,1	156,5	80,3	84,8	143,7	197,3	226,3	223,7	299,8
313,0	476,0	0,2	0,9	3,0	156,6	80,3	84,8	143,8	197,0	226,3	223,2	299,3
314,0	477,0	0,2	0,9	3,1	156,6	80,3	84,7	143,8	196,7	226,2	222,8	298,1
315,0	478,0	0,1	0,9	3,1	156,5	80,2	84,8	143,9	197,0	225,9	222,4	297,8
316,0	479,0	0,1	0,9	3,0	156,3	80,2	84,7	143,6	196,7	225,6	222,0	296,6
317,0	480,0	0,1	0,9	3,0	155,9	80,3	84,7	143,5	196,6	225,6	221,8	296,2
318,0	481,0	0,1	1,0	2,8	155,1	80,3	84,7	142,9	196,4	225,9	221,4	296,0
319,0	482,0	0,1	1,0	2,8	154,5	80,3	84,7	142,6	196,0	225,3	220,9	295,5
320,0	483,0	0,2	0,9	2,8	153,7	80,3	84,7	142,2	195,8	225,4	220,8	295,0
321,0	484,0	0,1	0,9	2,8	153,2	80,3	84,7	141,8	195,3	225,5	220,5	294,4
322,0	485,0	0,1	0,8	2,8	152,8	80,2	84,8	141,4	194,6	225,3	220,3	293,8
323,0	486,0	0,1	0,8	2,7	152,6	80,3	84,7	141,3	194,4	225,1	219,9	293,2
324,0	487,0	0,1	0,8	2,7	152,3	80,4	84,6	141,2	194,0	224,7	219,8	292,6
325,0	488,0	0,1	0,8	2,7	152,0	80,4	84,7	141,0	193,3	224,7	219,8	291,8
326,0	489,0	0,1	0,8	2,7	151,8	80,3	84,7	140,8	192,6	224,1	219,4	291,5
327,0	490,0	0,1	0,8	2,7	151,5	80,4	84,7	140,9	192,1	223,6	218,9	290,7
328,0	491,0	0,1	0,8	2,7	151,6	80,3	84,7	140,7	191,6	223,6	218,7	289,3
329,0	492,0	0,1	0,8	2,8	151,2	80,3	84,6	140,4	191,0	223,3	218,4	288,8
330,0	493,0	0,1	0,8	2,7	151,2	80,5	84,6	140,1	190,3	222,9	218,0	288,3
331,0	494,0	0,1	0,8	2,7	150,8	80,4	84,7	140,0	189,7	222,4	217,9	287,9
332,0	495,0	0,1	0,8	2,7	150,5	80,4	84,6	139,7	189,4	222,2	217,3	287,8
333,0	496,0	0,1	0,8	2,7	150,6	80,4	84,7	139,6	188,7	221,8	216,9	287,3
334,0	497,0	0,1	0,8	2,6	150,3	80,4	84,7	139,5	188,3	221,6	216,6	286,9
335,0	498,0	0,1	0,8	2,7	150,0	80,4	84,7	139,2	187,7	221,1	216,4	286,4
336,0	499,0	0,1	0,7	2,6	149,7	80,4	84,7	139,1	187,3	221,4	216,1	285,8
337,0	500,0	0,1	0,8	2,7	149,5	80,4	84,7	139,1	187,0	220,4	215,5	285,3
338,0	501,0	0,1	0,7	2,6	149,4	80,4	84,7	138,8	186,5	220,3	215,6	284,0
339,0	502,0	0,1	0,7	2,7	149,1	80,5	84,7	138,7	186,2	219,3	214,9	283,4
340,0	503,0	0,0	0,8	2,7	148,9	80,4	84,6	138,6	186,0	218,9	214,8	283,1

Manufacturer: IHP
Model: IRON STRIKE

Run: 3
Project #: PI 20165
Test Duration: 340 min

	HHV	LHV
Eff	72,93%	78,47%
Comb Eff	96,52%	96,52%
HT Eff	75,55%	81,29%
Output	16 865	kJ/h
Burn Rate	1,14	kg/h
Grams CO	341	g
Input	23 127	kJ/h
MC wet	16,68	

Note: In the “Input data”, "Calc. % O_2", "Fuel Properties", and “Mass Balance” columns, [e], [d], [g], [a]. [b], [c], [h], [u], [w], [j], and [k] refer to their respective variables in Clauses 13.7.3

	Ultimate CO_2
$CO_{2\text{-}ult}$	19,86
	F_0
	1,048

Overall Heating Efficiency:	72,93%	
Combustion Efficiency:	96,52%	
Heat Transfer Efficiency:	75,55%	

Air Fuel Ratio (A/F)	
Dry Molecular Weight (M_d)	29,55
Dry Moles Exhaust Gas (N_r):	524,32
Air Fuel Ratio (A/F)	14,98

Heat Output:	15 999	Btu/h	16 865	kJ/h
Heat Input:	21 938	Btu/h	23 127	kJ/h
Burn Duration:	5,67	h		
Burn Rate:	2,52	lb/h	1,145	kg/h
Stack Temp:	285,7	Deg. F	141,0	Deg. C

POLYTESTS
TESTING THROUGH YOUR REALITY

Date: 2018-05-25 Manufacturer: IAP Model: IRON STRIKE
Project #: PI 20165 Run: 3 Tech: M M Reviewer: DP

- Start Fire torche 1 minutes
- close Door imediatly
- Fan off
- At 25 LBS instant load
- close Door immediatly
- At 1600 LBS open Fan
- At 38 LBS close Fan
- At 200 LBS instant load
- At 900°F close air inlet 1/2
- At 10 min close air inlet 3/4
- At 14 min close air inlet progressivement
At 15 min close air inlet
At 38 min open Fan

TEST LOAD CONFIGURATION

POLYTESTS
TESTING THROUGH YOUR REALITY

PRE / POST CHECKS

Date: 2018-05-25 Manufacturer: IAP Model: 1h on stable

Project #: PI 2065 Run: 3 Tech: MM Reviewer: [illegible]

	Equipment #	Time	12%	22%
Moisture Meter Calibration Check:	EM 190	7:00	ok	ok

	Pre-Test	Post-Test
Facility Conditions:		
Air Velocity from less than 2 feet	4 (max50 Fpm)	9 (max50 Fpm)
Smoke Capture Check	ok	ok
Picture	4 sides ok	ok
Wood Heater Conditions:		
Date Wood Heater Stack Cleaned	2018-05-23	
Date Dilution Tunnel Cleaned	2018-05-23	
Induced Draft Check (max 0.005 H2O)	ok	
Traverse before ignition	ok	
Temperature System:		
Ambient (65°-90°F)	ok °F	
Proportional Checks:		
Thermocouple check	ok	
Pitot Clean	ok	
Pitot verification	ok	

Sampling Train ID Numbers:

	High fire test			Medium low fire test		
	1st hour	Train 1	Train 2	1st hour	Train 1	Train 2
Probe				18	31	42
Filter Front				142	145	147
Filter Back				143	146	148
Filter Thermocouple				1	14	30
Filter (80°F ≥ <90°F)				✓	✓	✓

POLYTESTS
TESTING THROUGH YOUR REALITY

SAMPLING EQUIPMENT CHECK OUT

Date: 2018-05-25 Manufacturer: JHP Model: Iron Strike

Project #: PI 20165 Run: 3 Tech: MM Reviewer: [illegible]

Leakage Checks Tunnel Samplers

High fire test	System 1st hour		System 1		System 2	
Unplugged Flow Rate = .25cfm	Pre-Test ASTM (-15) CSA B415 (-5)	Post-Test (max test)	Pre-Test ASTM (-15) CSA B415 (-5)	Post-Test (Max test)	Pre-Test ASTM (-15) CSA B415 (-5)	Post-Test (Max test)
Vacuum (inches Hg.)						
Final 1minute DGM (Liter)						
Initial 1minute DGM (Liter)						
Change © (Liter)						
Allowable leakage .04 x Sample rate or 0.28Lpm CSA B415 (0.56)						
Check OK						

Low medium fire test	System 1st hour		System 1		System 2	
Unplugged Flow Rate = .25cfm	Pre-Test ASTM (-15) CSA B415 (-5)	Post-Test (max test)	Pre-Test ASTM (-15) CSA B415 (-5)	Post-Test (Max test)	Pre-Test ASTM (-15) CSA B415 (-5)	Post-Test (Max test)
Vacuum (inches Hg.)	-15	-15	-15	-15	-15	-15
Final 1minute DGM (Liter)	679665,89	681370,00	679665,96	681370,10	632077,41	633845,61
Initial 1minute DGM (Liter)	679665,88	681370,00	679665,95	681370,08	632077,41	633845,60
Change © (Liter)	0,01	Ø	0,01	0,02	Ø	0,01
Allowable leakage .04 x Sample rate or 0.28Lpm CSA B415 (0.56)						
Check OK	Ok	Ok	Ok	Ok	Ok	Ok

POLYTESTS
TESTING THROUGH YOUR REALITY

SAMPLING EQUIPMENT CHECK OUT

Date: 2018-05-25 Manufacturer: INAP Model: IRON SHARK

Project #: pI 20165 Run: 3 Tech: MM Reviewer: RP

Leakage Checks Flue Gas Sampler

Plugged Probe	Pre-Test	Post Test
Vacuum (inches Hg.)	-6	-6
Rotameter Reading (mml/min.)	0	0
Flow Rate (lpm)	1.5	1.5
Allowable (.02 x Sample Rate)	30	30
Check OK	ok	ok

Leakage Checks Pitot

Plugged Probe	Pre Test 3 H2o static	Pre Test 0.4-0.5 H2o velocity	Post Test 3 H2o Static	Post Test 0.4-0.5 H2o velocity
Vacuum (inches Hg.)	3	.4	3	.5
Check OK (no change after 15 sec.)	ok	ok	ok	ok

POLYTESTS
TESTING THROUGH YOUR REALITY

PRE-TEST SCALE AUDIT

Date: 2018-05-25 Manufacturer: IHP Model: IRON SHARK

Project #: PI 20165 Run: 3 Tech: MM Reviewer: NP

Scale Type	Audit		Measured Weight
	Equipment #	Weight	
Platform	EM-090	44 lbs, Class F	44 lbs
Wood	EM-090	44 lbs, Class F	44 lbs
Analytical	EM 123	100 mg, Class S	100 mg
Analytical	EM 129	200 g, Class S	200 g

LIMITS OF WEIGHT RANGES

ANALYTICAL SCALE: ..... 50%-150% of dry filter weight, ± 0.1 mg
PLATFORM SCALE ..... 20%-80% of ideal test load weight, ± 0.1 lbs or 1%
WOOD SCALE ..... 20%-80% of ideal test load weight, ± 0.01 lbs or 1%

POLYTESTS
TESTING THROUGH YOUR REALITY

CONTINUOUS ANALYZERS

Date: 2018-05-28 Manufacturer: THP Model: Iron Strike
Project #: PI 20165 Run: 3 Tech: MM Reviewer: DP

FOR TUNNELS < 12 in

Barometric pressure (P_{bar}) 1005 (KPa.) Static pressure (P_q) 0.14 (inches w.c.)
Inside diameter: Port A _____ Port B _____.
Tunnel cross sectional area: .1963Ft^2
Pitot tube type: Standard

Traverse Point	Position (inches)			Velocity Head Δ_p (inches H_2O)	Tunnel Temperature (°F)
	6 po	7 po	8 po		
A- Centroid	3.00	3.50	4	0.050	79.28
B - Centroid	3.00	3.50	4	0.051	78.36
A-1	0.40	0.50	0.50	0.040	78.90
A-2	1.50	1.75	2	0.047	78.99
A-3	4.50	5.25	6	~~0.054~~ 0.058	78.78
A-4	5.60	6.5	7.5	0.039	78.64
B-1	0.40	0.50	0.50	0.040	78.30
B-2	1.50	1.75	2	0.049	78.33
B-3	4.50	5.25	6	0.048	78.27
B-4	5.60	6.5	7.5	0.040	78.21
				AVERAGE	

$$v_s = K_p C_p (\sqrt{\Delta p})_{avg} \sqrt{\frac{(T_s)_{avg}}{P_s M_s}}$$

Where,
C_p = pitot tube coefficient, dimension less = 0.99 for standard pitot.
Δ_p = manometer reading (inches H_2O)
T_s = average absolute dilution tunnel temperature (°F + 460)
P_s = absolute dilution tunnel gas pressure or $P_{bar} + P_{qg}$
P_q = static pressure $\frac{\text{in. } H_2O}{\{13.6\}}$
M_s = 28.56, wet molecular weight of stack gas (alternatively, it may be measured)
K_p = 85.49 pitot tube constant, (conversion factor for English units)

_$\Delta_p$avg. = average of the square roots of the velocity heads (Δ_p) measured at each traverse point.

POLYTESTS
TESTING THROUGH YOUR REALITY

CONTINUOUS ANALYZERS

Date: 2018-05-25 Manufacturer: IHP Model: Iron Strike

Project #: PJ 20165 Run: 3 Tech: MM Reviewer: DS

Pre-Test (Adjust and Record)

	ZERO		SPAN		CAL. (Record Only)	
CO	0	0	0.960	3.00	0.978	1.00
Tolerance CO		+/- 0.02		+/- 0.15		+/- 0.05
CO_2	0	0	18.09	18.00	9.88	10.00
Tolerance CO2		+/- 0.02		+/- 0.5		+/- 0.5
O_2 informative CSA B415 calculated value	na	na	na	na	na	na
	Actual	Should Be	Actual	Should Be	Actual	Should Be

Post Test (Record Only)

	Zero	Span	Cal.	Zero Drift	Limit	Span Drift	Limit	Cal. Drift	Limit	OK?	Not OK*
CO					0.02		0.15		0.05		
CO_2					0.02		0.5		0.5		

POLYTESTS
TESTING THROUGH YOUR REALITY

TEST DATA LOG

Date: 2018-05-25 Manufacturer: IAP Model: Iron strike

Project #: PI 20165 Run: 3 Tech: MM Reviewer: BP

RAW DRY GAS METER READINGS

		System 1	System 2	Blank
High fire test	Final (Liter)			
	Initial (Liter)			
Low medium fire test	Final (Liter)	681369,15	633844,78	700,85
	Initial (Liter)	679666,26	632078,93	671,41

AMBIENT CONDITIONS

	Before	After
Barometer (kPa):	100,5	100,0
Dry Bulb (F):	81,68	84,74
Humidity (%):	32,4	28,8

POLYTESTS
TESTING THROUGH YOUR REALITY

FUEL DATA

Date: 2018-05-25 Manufacturer: IHP Model: IRON SMOKE

Project #: PT 20165 Run: 3 Tech: MM Reviewer: DP

FUEL DESCRIPTION:

Type of wood:

KINDLING AND START-UP LOAD

Piece Size				Weight		Meter Moisture Content (% dry)				
	x	x	in.	2.86	lbs.	9,6	9,0	9,1	9,3	9,4
	x	x	in.	4.34	lbs.	19,1	19,6	19,9	19,8	19,6
	x	x	in.		lbs.					
	x	x	in.		lbs.					
	x	x	in.		lbs.					
	x	x	in.		lbs.					
	x	x	in.		lbs.					
	x	x	in.		lbs.					
	x	x	in.		lbs.					

HIGHFIRE TEST LOAD

Piece Size				Weight		Meter Moisture Content (% dry)				
300	x400	x	16 in.	3.19	lbs.	23,1	19,9	19,6	22,1	21,6
300	x275	x	11 in.	3.15	lbs.	19,6	19,9	20,1	20,4	19,5
300	x375	x	11 in.	3.26	lbs.	19,3	22,2	21,6	19,4	20,6
	x	x	in.		lbs.					
450	x450	x	16 in.	6.02	lbs.	19,6	19,8	20,0	19,8	19,7
	x	x	in.		lbs.					
	x	x	in.		lbs.					
	x	x	in.		lbs.					
	x	x	in.		lbs.					

POLYTESTS
TESTING THROUGH YOUR REALITY

FUEL DATA

Date: 2018-05-25 Manufacturer: THP Model: IRON SMOKE

Project #: PI 2165 Run: 3 Tech: M M Reviewer: DP

FUEL DESCRIPTION:

Type of wood:

LOW OR MEDIUM TEST LOAD

Piece Size				Weight		Meter Moisture Content (% dry)				
2 1/4	x 300 x	16	in.	3 068	lbs.	191	196	194	193	195
350	x 300 x	16	in.	3 400	lbs.	223	199	198	216	210
350	x 300 x	16	in.	3660	lbs.	199	201	206	193	192
	x x		in.		lbs.					
400	x 350 x	16	in.	~~4 976~~ 4 976	lbs.	199	200	204	199	198
25	x 25 x	16	in.	213	lbs.	191	196	197	197	199
	x x		in.		lbs.					
	x x		in.		lbs.					
	x x		in.		lbs.					
	x x		in.		lbs.					
	x x		in.		lbs.					
	x x		in.		lbs.					
	x x		in.		lbs.					
	x x		in.		lbs.					

POLYTESTS
TESTING THROUGH YOUR REALITY

DILUTION TUNNEL PARTICULATE SAMPLER DATA

Date:_____ Manufacturer:_____ Model:_____

Project #:_____ Run:_____ Tech:_____ Reviewer:_____

		HIGHFIRE TEST FILTERS								
		SYSTEM 1 – 1st hour				SYSTEM 1				
Pre-test Weight Record		Probe & Housing Number	Front Filter Number	Back Filter Number	gaskets	Probe & Housing Number	Front Filter Number	Back Filter Number	gaskets	Blanck
Date	Time									

		SYSTEM 1 – 1st hour				SYSTEM 1				
Post-test Weight Record		Probe & Housing Number	Front Filter Number	Back Filter Number	gaskets	Probe & Housing Number	Front Filter Number	Back Filter Number	gaskets	Blanck
Date	Time									

DILUTION TUNNEL PARTICULATE SAMPLER DATA

Date:_____ Manufacturer:_____ Model:_____

Project #: _____ Run:_____ Tech:_____ Reviewer:_____

		HIGH FIRE TEST FILTERS			
		SYSTEM 2			
Pre-test Weight Record		Probe & Housing Number	Front Filter Number	Back Filter Number	gaskets
Date	Time				

		SYSTEM 2			
Post-test Weight Record		Probe & Housing Number	Front Filter Number	Back Filter Number	gaskets
Date	Time				

POLYTESTS
TESTING THROUGH YOUR REALITY

DILUTION TUNNEL PARTICULATE SAMPLER DATA

Date: 2018-05-24 Manufacturer: JHP Model: Iron Strike

Project #: PT 20165 Run: 3 Tech: MM Reviewer: DP

		LOW OR MEDIUM TEST FILTERS								
		SYSTEM 1 – 1st hour				SYSTEM 1				
Pre-test Weight Record		Probe & Housing Number	Front Filter Number	Back Filter Number	gaskets	Probe & Housing Number	Front Filter Number	Back Filter Number	gaskets	Blanck
Date	Time	18	142	143	1	31	145	146	14	149
2018-05-24	18:00	108 9466	00836	00842	35 3585	110 1282	00841	00844	34 2535	00850
2018-05-25	8:00	108 9466	00836	00842	35 3585	110 1282	00841	00844	34 2535	00850

		SYSTEM 1 – 1st hour				SYSTEM 1				
Post-test Weight Record		Probe & Housing Number	Front Filter Number	Back Filter Number	gaskets	Probe & Housing Number	Front Filter Number	Back Filter Number	gaskets	Blanck
Date	Time	18	142	143	1	31	145	146	14	149
2018-05-25	17:00	108 9468	00859	00839	35 3612	110 1285	00839	00847	34 2555	00851
2018-06-04	8:00	108 9468	00856	00838	35 3604	110 1285	00837	00844	34 2542	00850
2018-06-13	8:00	108 9468	00855	00838	35 3604	110 1285	00836	00843	34 2542	00850

POLYTESTS
TESTING THROUGH YOUR REALITY

DILUTION TUNNEL PARTICULATE SAMPLER DATA

Date: 2018-05-25 Manufacturer: IHP Model: IRonstrike

Project #: DT-20165 Run: 3 Tech: mm Reviewer: DP

		LOW OR MEDIUM FIRE TEST FILTERS			
		SYSTEM 2			
Pre-test Weight Record		Probe & Housing Number	Front Filter Number	Back Filter Number	gaskets
Date	Time	42	147	148	30
2018-05-24	18:00	110 3103	00835	00839	34,2097
2018-05-25	8:00	110 3103	00835	00839	34,2097

		SYSTEM 2			
Post-test Weight Record		Probe & Housing Number	Front Filter Number	Back Filter Number	gaskets
Date	Time	42	147	148	30
2018-05-25	17:00	110 3106	00859	00837	34,231
2018-06-04	8:00	110, 3106	00852 ~~00856~~	00838	34 218
2018-06-13	8:00	110 3106	00852	00838	34 218

Paramètres

Tous les facteurs de corrections et autres paramètres qui peuvent être modifiés par l'utilisateur du fichier sont regroupés ici.

Code verrouillage:	IHP

Description du test

Test standard	EPA	
Run #	4	
Date	28-05-2018	
Technicien	M.M	
Project #	PI 20165	

Description de l'unité

Manufacturier	IHP	
Modèle	IRON STRIKE	
Combustion system	Non-Cat	
Appliance type	wood stove	
Firebox volume	1,51	cu ft.
Appliance weight empty	n.a	lbs
Fan (no, Standard, Option)	optional	

Paramètres du test

Logging time	1	min
Manufacturer's rated heat output	n.a	BTU/h Donnée fournie par le manfacturier
Targeted category	1	
Targeted output	n.a	BTU/h
Cp steel	n.a	BTU/lb-°F

Échantillonnage

Blank sampling rate	0,20	cuft/min
Internal probe diameter	0,18	in.
Calibration Factor (DGM #1):	0,988	Dimensionless
Equipment number (DGM #1):	em 178	
Calibration Factor (DGM #2):	0,991	Dimensionless
Equipment number (DGM #2):	em 179	
Calibration Factor (DGM #3):	0,996	
Equipment number (DGM #3):	em 070	Dimensionless

Tunnel

Targeted tunnel flow rate	300	scfm
Tunnel diameter	8	in.
Molecular weight	28,78	May be assumed to be 28,78 (EPA) Si B-415 = 29
Pitot tube type	Standard	
Pitot tube coefficient	0,99	Dimensionless

Project nu.	PI 20165
Date	28-05-2018
Technicien	m.m

Fuel data

Fuel type	Cord	
Fuel specie	Oak	
HHV	20207,0	kJ/kg
%C	49,5	
%H	6,6	
%O	43,7	
%Ash	0,2	
HHV	8689,9	Btu/lb
LHV	7600,4	Btu/lb

Default Fuel Values

	D. Fir	Oak/Maple
HHV	19 810	20 207
%C	48,73	49,5
%H	6,87	6,62
%O	43,9	43,7
%Ash	0,5	0,2
HHV (Btu/lb)	8519	8690
LHV (Btu/lb)	7451	7600

Adjunct to ASTM E XXXX Wood Heater Cordwood Test Method - May 10, 2017 Version

Cordwood Fuel Load Calculators - 10 lb/ft^3 Nominal Load Density

Core 45-65% of Total Load Weight, Remainder 35-55% of Total Load Weight

Values to be input manually

For All Usable Firebox Volumes - High Fire Test Only

Nominal Required Load Density (wet basis)	10	lb/ft^3				
Usable Firebox Volume	1,51	ft^3				
Total Nom. Load Wt. Target	15,10	lb				
Total Load Wt. Allowable Range	14,30	to	15,90	lb		
Core Target Wt. Allowable Range	6,80	to	9,80	lb		
Remainder Load Wt. Allowable Range	5,30	to	8,30	lb		
						Mid-Point
Core Load Pc. Wt. Allowable Range	2,30	to	3,80	lb		3,05
Remainder Load Pc. Wt. Allowable Range	1,50	to	8,30	lb		4,90
	Pc. #					
Core Load Piece Wt. Actual	1	2,95	lb	In Range		
	2	3,07	lb	In Range		
	3	3,08	lb	In Range		
Core Load Total. Wt. Actual		9,10	lb	In Range		
	Pc. #					
Remainder Load Piece Wt.	1	6,05	lb	In Range		
(1 to 3 Pcs.)	2		lb	NA		
	3		lb	NA		
Remainder Load Tot. Wt. Act		6,05	lb	In Range		
Total Load Wt. Actual		15,15	lb	In Range		
Core % of Total Wt.		60%		In Range	45-65%	
Remainder % of Total Wt.		40%		In Range	35-55%	
Actual Load % of Nominal Target		100%		In Range	95-105%	
Actual Fuel Load Density		10,0	lb/ft^3			
Kindling and Start-up Fuel						
Maximim Kindling Wt. (20% of Tot. Load Wt.)		3,03	lb			
Actual Kindling Wt.		2,83	lb	In Range	18,7%	
Maximum Start-up Fuel Wt. (30% of Tot. Load Wt.)		4,54	lb			
Actual Start-up Fuel Wt.		4,33	lb	In Range	28,6%	
Allowable Residual Start-up Fuel Wt. Range	1,5	to	3,0	lb		Mid-Point
Actual Residual Start-up Fuel Wt.		2,5	lb	In Range		2,3
Total Wt. All Fuel Added (wet basis)		22,31	lb			
High Fire Test Run End Point Range	Low		High			Mid-Point
Based on Fuel Load Wt. (w/tares)	1,4	to	1,7	lb		1,5
Actual Fuel Load Ending Wt.		na	lb	Out of Range		

Load pieces Length in. 16 in.

Fuel Piece Moisture Reading (%-dry basis)

1	2	3	Ave.		Pc. Wt. Dry Basis		
19,3	19,9	19,6	19,6	In Range	2,47 lb	1,12 kg
19,8	19,9	20	19,9	In Range	2,56 lb	1,16 kg
22,6	19,5	21,8	21,3	In Range	2,54 lb	1,15 kg
20,6	19,3	20,5	20,1	In Range	5,04 lb	2,28 kg
			NA	NA	NA lb	NA kg
			NA	NA	NA lb	NA kg

Total Load Ave. MC (%-dry basis)	20,2	In Range		
Total Load Ave. MC % (wet basis)	16,8			
Total Test Load Weight (dry basis)			12,60 lb	5,72 kg
Kindling Moisture (%-dry basis)				
9,3 / 9,6 / 9,6	9,5	In Range	2,58 lb	1,17 kg
Start-up Fuel Moisture Readings (%-dry basis)				
19,6 / 20 / 20	19,9	In Range	3,61 lb	1,64 kg
Total Wt. All Fuel Added (dry basis)			18,80 lb	8,53 kg
Total Wt. All Fuel Burned (dry basis)			#VALEUR! lb	######## kg

Adjunct to ASTM E XXXX Wood Heater Cordwood Test Method - May 10, 2017 Version

Cordwood Fuel Load Calculators - 12 lb/ft^3 Nominal Load Density

Core 45-65% of Total Load Weight, Remainder 35-55% of Total Load Weight

Values to be input manually

THIS DOCUMENT IS NOT AN ASTM STANDARD; IT IS UNDER CONSIDERATION WITHIN AN ASTM TECHNICAL COMMITTEE BUT HAS NOT RECEIVED ALL APPROVALS REQUIRED TO BECOME AN ASTM STANDARD. IT SHALL NOT BE REPRODUCED OR CIRCULATED OR QUOTED, IN WHOLE OR IN PART, OUTSIDE OF ASTM COMMITTEE ACTIVITIES EXCEPT WITH THE APPROVAL OF THE CHAIRMAN OF THE COMMITTEE HAVING JURISDICTION AND THE PRESIDENT OF THE SOCIETY. *COPYRIGHT ASTM, 100 BARR HARBOR DRIVE, WEST CONSHOHOCKEN, PA 19428. ALL RIGHTS RESERVED.*

For Usable Firebox Volumes up to 3.0 ft^3 - Low and Medium Fire

Nominal Required Load Density (wet basis)	12	lb/ft^3				
Usable Firebox Volume	1,51	ft^3				
Total Nom. Load Wt. Target	18,12	lb				
Total Load Wt. Allowable Range	17,21	to	19,03	lb		
Core Target Wt. Allowable Range	8,154	to	11,78	lb		
Remainder Load Wt. Allowable Range	6,34	to	9,97	lb		
						Mid-Point
Core Load Fuel Pc. Wt. Allowable Range	2,72	to	4,53	lb		3,62
Remainder Load Pc. Wt. Allowable Range	1,81	to	5,44	lb		3,62
	Pc. #					
Core Load Piece Wt. Actual	1	3,12	lb		In Range	
	2	3,50	lb		In Range	
	3	3,55	lb		In Range	
Core Load Total. Wt. Actual		10,17	lb		In Range	
	Pc. #					
Remainder Load Piece Wt.	1	5,20	lb		In Range	
(2 or 3 Pcs.)	2	2,32	lb		In Range	
	3		lb		NA	
Remainder Load Piece Weight Ratio - Small/Large		45%			In Range	≤ 67%
Remainder Load Tot. Wt. Act		7,52	lb		In Range	
Total Load Wt. Actual		17,69	lb		In Range	
Core % of Total Wt.		57%			In Range	45-65%
Remainder % of Total Wt.		43%			In Range	35-55%
Actual Load % of Nominal Target		98%			In Range	95-105%
Actual Fuel Load Density		11,7	lb/ft^3			
Allowable Charcoal Bed Wt. Range (lb)	1,8	to	3,5			Mid-Point
Actual Charcoal Bed Wt.		2,0	lb		In Range	2,7
Actual Fuel Load Ending Wt.		0,0	lb		Valid Test	≥ 90%
Total Wt. of Fuel Burned During Test Run lb.		17,7	lb			
Load pieces Length in.		16	in.			

Fuel Piece Moisture Reading (%-dry basis)

1	2	3	Ave.		Pc. Wt. Dry Basis			
20,6	20,7	21,8	21,0	In Range	2,58	lb	1,17	kg
19,1	19,3	19,1	19,2	In Range	2,94	lb	1,33	kg
19,6	20	19,9	19,8	In Range	2,96	lb	1,34	kg
21,2	21,8	21,3	21,4	In Range	4,28	lb	1,94	kg
19,6	19,9	19,3	19,6	In Range	1,94	lb	0,88	kg
			NA	NA	NA	lb	NA	kg

Total Load Ave. MC % (dry basis)	20,3	In Range		
Total Load Ave. MC % (wet basis)	16,9			
Total Test Load Weight (dry basis) →			14,70	lb 6,67 kg
Total Fuel Weight Burned During Test Run (dry basis)			14,7	lb 6,67 kg

For Usable Firebox Volumes above 3.0 ft^3 - Low and Medium Fire

Nominal Required Load Density (wet basis)	12	lb/ft^3				
Usable Firebox Volume		ft^3				
Total Nom. Load Wt. Target	0	lb				
Total Load Wt. Allowable Range	0,00	to	0,00	lb		
Core Target Wt. Allowable Range	0,00	to	0,00	lb		
Remainder Load Wt. Allowable Range	0,00	to	0,00	lb		
						Mid-Point
Core Load Fuel Pc. Wt. Allowable Range	0,00	to	0,00	lb		0,00
Remainder Load Pc. Wt. Allowable Range	0,00	to	0,00	lb		0,00
	Pc. #					
Core Load Piece Wt. Actual	1		lb		In Range	
	2		lb		In Range	
	3		lb		In Range	
Core Load Total. Wt. Actual		0,00	lb		In Range	
	Pc. #					
Remainder Load Piece Wt.	1		lb		In Range	
(3 or 4 Pcs.)	2		lb		In Range	
	3		lb		In Range	
	4		lb		NA	
Remainder Load Piece Weight Ratio - Small/Large		#NOMBRE!			#NOMBRE!	≤ 67%
Remainder Load Tot. Wt. Act		0,00	lb		In Range	
Total Load Wt. Actual		0,00	lb		In Range	
Core % of Total Wt.		#DIV/0!			#DIV/0!	45-65%
Remainder % of Total Wt.		#DIV/0!			#DIV/0!	35-55%
Actual Load % of Nominal Target		#DIV/0!			#DIV/0!	95-105%
Actual Fuel Load Density		#DIV/0!	lb/ft^3			
Allowable Charcoal Bed Wt. Range (lb)	0,1	to	-0,1			Mid-Point
Actual Charcoal Bed Wt.			lb		Out of Range	0,0
Actual Fuel Load Ending Wt.			lb		Valid Test	≥ 90%
Total Wt. of Fuel Burned During Test Run lb.		0,0	lb			

Fuel Piece Moisture Reading (%-dry basis)

1	2	3	Ave.		Pc. Wt. Dry Basis			
			#DIV/0!	#DIV/0!	#DIV/0!	lb	#DIV/0!	kg
			#DIV/0!	#DIV/0!	#DIV/0!	lb	#DIV/0!	kg
			#DIV/0!	#DIV/0!	#DIV/0!	lb	#DIV/0!	kg
			#DIV/0!	#DIV/0!	#DIV/0!	lb	#DIV/0!	kg
			#DIV/0!	#DIV/0!	#DIV/0!	lb	#DIV/0!	kg
			#DIV/0!	#DIV/0!	#DIV/0!	lb	#DIV/0!	kg
			NA	NA	NA	lb	NA	kg

Total Load Ave. MC % (dry basis)	#DIV/0!	#DIV/0!		
Total Load Ave. MC % (wet basis)	#DIV/0!			
Total Test Load Weight (dry basis) →			#DIV/0!	lb #DIV/0! kg
Total Fuel Weight Burned During Test Run (dry basis)			#DIV/0!	lb #DIV/0! kg

	Start	End
Barometer (kPa):	100,9	100,6
Barometer (in.Hg):	29,795759	29,70716882
Dry Bulb (F):	81,82	85,64
Humidity (%):	36	33
Air velocity (ft/min)	9	8

High fire test						
DGM #1	Final:	0,000	cuft	Final:		Liter
	Initial:	0,000	cuft	Initial:		Liter
DGM #2	Final:	0,000	cuft	Final:		Liter
	Initial:	0,000	cuft	Initial:		Liter
DGM room				Final:		cuft
				Initial:		cuft

min or med burnrate						
DGM #1	Final:	24117,787	cuft	Final:	682939,660	Liter
	Initial:	24062,414	cuft	Initial:	681371,680	Liter
DGM #2	Final:	22441,163	cuft	Final:	635462,950	Liter
	Initial:	22384,169	cuft	Initial:	633849,080	Liter
DGM room				Final:	728,440	cuft
				Initial:	700,850	cuft

Numéro de la ligne dans "Raw data" à partir duquel les données du test commence	
Numéro de la ligne dans "Raw data" à partir duquel les données du highfire test commence	
Numéro de la ligne dans "Raw data" à partir duquel les données du min ou medium fire test commence	183

Autres données à rentrer: dans preload data, load data, traverse et filter set weight

Project nu.	PI 20165
Date	28-05-2018
Technicien	mm

Tunnel Traverse Worksheet (for velocity calculations)

Static Pressure: 0,13 in. H20
Barometer: 29,796 in. Hg

Pour un tunnel de 12" et plus, prendre 6 lectures

	TUNNEL VELOCITY	TUNNEL TEMP	SQUARE ROOT
	In. wc	°F	
A center			0,0000
B center			0,0000
A1			0,0000
A2			0,0000
A3			0,0000
A4			0,0000
A5			0,0000
A6			0,0000
B1			0,0000
B2			0,0000
B3			0,0000
B4			0,0000
B5			0,0000
B6			0,0000
AVERAGE	#DIV/0!	#DIV/0!	0,0000

PITOT CONSTANT=
0,949

Pour un tunnel moins de 12", prendre 4 lectures

	TUNNEL VELOCITY	TUNNEL TEMP	SQUARE ROOT
	In. wc	°F	
A center	0,065	72,43	0,2550
B center	0,064	72,54	0,2530
A1	0,054	72,3	0,2324
A2	0,057	72,29	0,2387
A3	0,063	72,55	0,2510
A4	0,053	72,59	0,2302
B1	0,054	73,080	0,2324
B2	0,055	73,900	0,2345
B3	0,063	73,770	0,2510
B4	0,054	73,190	0,2324
AVERAGE	0,0582	72,8640	0,2411

Project nu.	PI 20165
Date	28-05-2018
Technicien	mm

Filter set weight Low/ medium fire

	System 1 (g) 1st hour				System 1 (g)				System 2 (g)				Ambient blank (g)	Date	Heure
	probe	front	back	gasket	probe	front	back	gasket	probe	front	back	gasket	Filter		
Number	16	800	801	39	33	802	803	40	43	804	805	41	806		
Before (1)															
Before (2)															
Before (3)															
Before (4)															
Before (5)	108,7544	0,0842	0,0843	35,3342	109,3630	0,0839	0,0837	35,1591	109,1650	0,0853	0,0885	35,0821	0,0840	2108-05-25	17:00
Before (6)	108,7545	0,0842	0,0843	35,3341	109,3629	0,0839	0,0837	35,1591	109,1652	0,0853	0,0885	35,0821	0,0840	2018-05-28	09:00
After (1)	108,7546	0,0859	0,0838	35,338	109,3632	0,0995	0,0835	35,1616	109,1657	0,1033	0,0874	35,0861	0,0842	2018-05-28	17:00
After (2)	108,7545	0,0854	0,0832	35,3367	109,3632	0,0990	0,0833	35,1604	109,1657	0,1028	0,0872	35,0849	0,0842	2018-06-04	08:00
After (3)	108,7545	0,0853	0,0831	35,3367	109,3632	0,0989	0,0833	35,1604	109,1657	0,1027	0,0872	35,0849	0,0842	2018-06-13	08:00
After (4)															
After (5)															
After (6)	108,7545	0,0853	0,0831	35,3367	109,3632	0,0989	0,0833	35,1604	109,1657	0,1027	0,0872	35,0849	0,0842	2018-06-13	08:00
Difference	0,0000	0,0011	-0,0012	0,0026	0,0003	0,0150	-0,0004	0,0013	0,0005	0,0174	-0,0013	0,0028	0,0002		
Total (mg)		2,5				18,7				19,4			0,2		
Total ajusté (mg)		**2,30**				**18,50**				**19,20**					

Project nu.	PI 20165
Date	28-05-2018
Technicien	mm

SFBA EPA EMISSION RESULTS

Test Duration: **318** min

PRESSURE FACTOR:	DGM 1	0,97565	
	DGM 2	0,97423	
	DGM 3	0,99437	
TEMPERATURE FACTORS	DGM 1	0,96829	
	DGM 2	0,96702	
	DGM 3	0,97650	
VOLUMES SAMPLED	DGM 1	51,708	SCft
	DGM 2	53,232	Scft
	DGM 3	26,676	SCft

TOTAL TUNNEL VOLUME : 94595

SAMPLE RATIOS

Sample Train 1:	1829,404
Sample Train 2:	1777,054

Paticulate concentration

Sample Train 1	**0,000362**	g/dscf
Sample Train 2	**0,000364**	g/dscf
Room	**0,000007**	g/dscf

TOTAL EMISSIONS

Sample Train 1	**33,50**	g
Sample Train 2	**33,77**	g

EMISSION RATES

Sample Train 1	**6,32**	g/hr
Sample Train 2	**6,37**	g/hr

1st hour emission rate **4,57** g/hr

	Train 1	Train 2
Cs	0,0003616	0,00036445

RESULTS

Average emission rate: 6,35 g/hr

Burn Rate : 1,258 Dry kg/hr

BAROMETRIC PRESSURE

Average:	29,7514638	in Hg
Start:	29,79575878	in Hg
End:	29,70716882	in Hg

DGM CONTROLLER VALUES

DGM 1	Final:	24117,787	Cuft
	Initial:	24062,414	Cuft
DGM 2	Final:	22441,163	Cuft
	Initial:	22384,169	Cuft
DGM #3	Final:	728,440	Cuft
	Initial:	700,850	Cuft

TEMPERATURES

DGM 1	545,290	°R
DGM 2	546,007	°R

CALIBRATION FACTORS

DGM 1	0,9885
DGM 2	0,9914
DGM #3	0,9958

TUNNEL FLOW RATE: 297,470 Dscfm

PARTICULATE CATCH

Total Sample Train 1:	18,70	mg
Total Sample Train 2:	19,40	mg
Total Sample Train 1 1st hour:	2,50	mg

DEVIATION: 0,39%

Elapsed		Weight			Flue	Room	Tunnel	Unit	Unit	Unit	Unit	Unit
Time	Raw data row	Remaining	CO	CO_2	Gas	Temp	Dry Bulb	Top	Back	R.Side	L.Side	Bottom
min		lbs	%	%	°F	°F	°F	°F	°F	°F	°F	°F
0,00	183,00	17,4	0,1	5,3	479,9	80,9	156,8	645,2	440,7	489,9	551,9	532,3
1,0	184,0	17,0	0,3	13,6	827,8	80,9	170,7	714,6	452,0	498,1	545,0	538,3
2,0	185,0	16,6	0,5	17,6	912,5	80,8	183,2	782,3	458,3	503,9	539,9	543,0
3,0	186,0	16,2	0,3	18,5	948,4	80,9	185,1	830,1	462,0	505,4	535,8	547,3
4,0	187,0	15,8	0,2	18,5	945,8	81,1	180,7	862,9	463,9	506,7	532,6	550,4
5,0	188,0	15,4	0,3	18,1	899,5	81,5	172,2	888,1	465,0	508,8	529,7	553,4
6,0	189,0	15,2	0,3	16,5	865,0	81,5	167,3	902,7	465,4	509,1	527,0	555,9
7,0	190,0	14,9	0,3	15,9	844,6	81,7	163,5	913,1	464,4	509,2	524,7	558,3
8,0	191,0	14,6	1,3	16,7	859,1	81,8	164,7	924,7	463,3	509,8	522,0	560,4
9,0	192,0	14,3	1,2	17,4	872,2	81,4	164,9	934,1	461,4	508,0	520,9	561,6
10,0	193,0	14,0	1,4	17,1	829,5	81,6	158,1	940,6	459,4	508,3	519,3	562,3
11,0	194,0	13,7	0,5	16,5	796,6	81,7	153,1	942,5	457,0	507,9	518,4	562,9
12,0	195,0	13,5	0,6	16,3	784,0	82,0	151,6	943,0	454,3	506,6	518,0	563,1
13,0	196,0	13,2	0,6	16,5	779,5	81,8	151,3	945,9	451,8	505,3	516,7	562,8
14,0	197,0	12,9	0,6	16,4	758,2	81,6	146,9	945,2	449,0	503,6	516,1	562,2
15,0	198,0	12,7	0,9	15,9	706,1	81,7	141,1	938,7	446,6	503,4	516,0	561,7
16,0	199,0	12,5	0,4	15,4	677,7	81,8	138,5	931,7	443,7	502,8	515,3	561,8
17,0	200,0	12,3	0,3	15,2	660,5	81,3	137,1	924,8	440,8	500,8	514,7	561,6
18,0	201,0	12,1	0,3	15,1	651,9	81,4	136,4	920,0	438,6	500,4	512,9	560,9
19,0	202,0	11,9	0,3	15,2	644,9	81,7	135,1	916,6	435,9	499,9	512,6	560,0
20,0	203,0	11,6	0,3	15,2	640,7	82,0	133,7	913,9	433,4	499,1	511,8	558,6
21,0	204,0	11,5	0,3	15,2	637,1	81,4	132,4	911,2	431,2	497,5	510,8	557,1
22,0	205,0	11,3	0,2	15,1	633,2	81,7	131,7	907,9	429,2	496,0	510,4	555,3
23,0	206,0	11,0	0,2	15,1	630,9	81,9	128,8	907,5	426,4	494,9	509,1	553,7
24,0	207,0	10,9	0,2	15,1	628,7	81,3	129,6	908,5	423,6	493,1	508,1	552,6
25,0	208,0	10,7	0,2	15,0	626,3	82,0	130,4	908,1	422,0	493,2	507,7	551,4
26,0	209,0	10,5	0,1	15,0	624,4	82,0	130,4	909,8	419,7	492,7	507,4	549,9
27,0	210,0	10,2	0,1	14,9	622,3	81,9	130,1	911,8	417,5	491,7	507,2	548,3
28,0	211,0	10,1	0,1	14,8	619,0	81,8	129,1	912,5	415,2	491,1	507,2	547,2
29,0	212,0	9,9	0,1	14,9	616,9	81,4	126,8	913,5	413,7	489,8	506,7	545,0
30,0	213,0	9,7	0,1	14,8	607,0	81,5	122,9	821,7	354,1	477,8	505,7	541,1
31,0	214,0	9,5	0,1	14,8	597,6	81,8	123,9	788,8	326,4	473,9	504,0	538,5
32,0	215,0	9,4	0,1	14,9	589,1	81,5	122,7	763,7	306,8	470,2	502,7	535,5
33,0	216,0	9,2	0,1	14,8	581,4	81,5	122,8	743,1	292,5	467,2	500,6	533,2
34,0	217,0	9,0	0,1	14,8	573,6	81,3	122,9	721,0	280,6	464,9	499,7	531,0
35,0	218,0	8,9	0,0	14,7	568,8	81,6	122,3	703,2	270,9	462,5	497,8	528,9
36,0	219,0	8,7	0,3	14,5	565,3	81,1	121,9	688,5	262,9	460,7	497,1	526,3
37,0	220,0	8,6	0,4	13,3	558,4	81,4	121,0	675,5	256,5	458,7	496,1	524,7
38,0	221,0	8,4	0,2	13,1	549,7	81,5	120,2	664,6	251,2	455,9	495,5	522,9
39,0	222,0	8,3	0,1	13,1	543,4	81,3	120,2	653,1	246,7	454,6	493,4	521,8
40,0	223,0	8,1	0,1	13,4	540,0	81,6	118,6	645,3	242,9	452,8	492,6	519,9
41,0	224,0	8,0	0,1	12,6	531,1	81,9	117,3	635,7	239,3	450,0	491,8	518,3
42,0	225,0	7,8	0,0	11,6	514,9	81,8	117,0	617,4	236,2	449,2	491,3	516,4
43,0	226,0	7,7	0,0	10,8	499,6	81,5	116,3	597,9	233,8	447,2	489,9	514,5
44,0	227,0	7,6	0,0	10,4	487,5	81,0	115,3	577,2	231,5	446,5	488,7	512,4
45,0	228,0	7,5	0,0	9,7	474,6	81,4	114,1	551,8	229,1	445,3	486,9	510,4
46,0	229,0	7,5	0,0	9,1	461,8	81,1	112,9	527,3	227,0	444,6	485,1	508,2
47,0	230,0	7,4	0,1	8,5	449,8	80,9	112,0	506,3	226,0	443,6	482,9	505,9
48,0	231,0	7,2	0,1	8,1	440,3	80,8	110,9	487,8	224,7	441,6	481,0	503,6
49,0	232,0	7,2	0,1	7,7	429,8	80,7	110,0	471,3	223,6	440,3	477,9	501,1
50,0	233,0	7,2	0,2	7,4	419,7	80,8	109,3	453,6	222,4	438,6	474,5	498,8
51,0	234,0	7,1	0,2	7,2	410,7	80,7	108,2	439,1	221,3	436,5	471,2	496,1
52,0	235,0	7,0	0,2	6,9	402,3	80,8	107,5	424,1	220,1	435,1	467,1	493,2
53,0	236,0	6,9	0,2	6,6	393,5	80,6	106,4	409,0	218,8	432,8	463,4	490,4
54,0	237,0	6,9	0,2	6,5	387,6	80,6	106,0	397,6	217,4	429,5	459,4	487,7
55,0	238,0	6,8	0,2	6,6	382,7	80,7	105,0	385,5	215,4	427,1	455,9	485,2
56,0	239,0	6,8	0,3	6,6	379,2	81,0	104,4	376,7	213,8	424,5	452,4	482,7
57,0	240,0	6,7	0,3	6,8	375,4	80,7	104,3	368,3	212,0	420,7	448,8	479,5
58,0	241,0	6,7	0,3	6,3	368,2	80,6	103,2	357,5	209,9	418,3	446,0	476,1
59,0	242,0	6,7	0,5	5,9	360,3	80,8	102,2	349,1	208,4	414,7	442,7	474,2
60,0	243,0	6,6	0,7	5,1	344,6	80,3	102,1	338,7	206,6	411,6	439,3	471,6
61,0	244,0	6,6	1,0	4,6	333,2	80,1	101,3	328,3	204,8	410,1	435,4	468,5
62,0	245,0	6,5	0,8	4,9	325,5	80,2	100,8	318,6	202,9	406,5	430,2	466,7
63,0	246,0	6,4	0,8	5,1	319,7	79,9	100,4	310,6	200,8	403,3	425,7	464,0
64,0	247,0	6,4	1,0	4,7	315,4	79,8	100,2	303,5	198,8	400,5	420,8	462,1
65,0	248,0	6,4	0,8	5,2	316,9	79,7	100,0	298,1	197,1	397,0	416,6	459,9
66,0	249,0	6,3	0,7	5,5	317,1	79,6	99,0	293,6	195,4	394,1	412,3	458,4
67,0	250,0	6,3	0,7	5,6	317,5	79,7	98,4	290,2	193,5	391,0	408,7	456,4
68,0	251,0	6,2	0,8	5,2	316,3	79,8	98,3	287,0	191,7	389,0	405,2	454,5
69,0	252,0	6,1	0,7	5,4	315,1	80,1	98,3	284,5	190,3	386,0	401,7	452,1
70,0	253,0	6,1	0,6	5,8	315,9	79,9	98,4	282,6	188,9	384,3	398,6	450,3
71,0	254,0	6,0	0,6	5,9	318,3	79,9	98,6	282,5	187,9	380,1	395,5	448,4
72,0	255,0	6,0	0,6	6,0	316,8	79,9	98,3	280,3	186,6	378,2	393,0	446,8
73,0	256,0	5,9	0,6	6,0	315,4	79,8	97,7	278,7	185,4	375,3	390,7	445,2
74,0	257,0	5,9	0,8	5,7	315,1	79,6	97,6	278,4	184,5	371,8	388,5	442,9
75,0	258,0	5,8	0,7	6,0	315,2	79,9	97,9	277,8	183,3	369,7	386,5	441,8
76,0	259,0	5,8	0,7	6,0	314,1	79,8	97,8	276,6	182,3	367,4	385,3	439,6
77,0	260,0	5,7	0,7	5,9	315,3	80,0	97,7	276,0	181,8	366,3	383,6	438,8
78,0	261,0	5,6	0,7	5,9	312,7	79,8	96,5	274,8	181,3	363,4	381,9	437,6
79,0	262,0	5,6	0,7	5,9	309,9	79,5	96,9	273,8	181,0	360,3	380,5	436,1
80,0	263,0	5,6	0,8	5,5	306,9	79,9	96,8	272,2	180,2	358,5	380,0	434,6
81,0	264,0	5,5	0,8	5,6	304,2	79,7	96,7	270,3	179,6	356,1	378,8	433,1
82,0	265,0	5,5	0,8	5,7	304,6	79,8	96,5	268,6	178,9	355,1	377,6	431,9
83,0	266,0	5,4	0,8	5,7	299,2	79,8	96,1	266,6	178,5	353,2	375,9	430,9
84,0	267,0	5,4	1,1	5,0	292,8	79,7	95,6	263,7	178,1	351,9	374,4	430,2
85,0	268,0	5,3	1,1	4,9	288,1	79,4	95,7	259,7	177,5	350,0	373,3	428,9
86,0	269,0	5,3	1,2	4,6	287,5	79,4	95,8	256,1	176,8	348,7	370,9	427,7
87,0	270,0	5,2	1,2	4,7	286,1	79,6	95,7	253,1	176,4	346,4	368,3	426,7
88,0	271,0	5,2	0,9	5,1	290,1	79,6	95,8	252,1	175,9	344,1	367,0	425,2
89,0	272,0	5,1	0,9	5,1	291,2	79,5	95,6	250,1	175,2	342,7	365,0	423,9
90,0	273,0	5,1	0,9	5,1	291,5	79,4	95,1	249,4	175,0	341,2	364,2	422,5
91,0	274,0	5,0	0,9	5,2	289,4	79,6	94,8	247,8	174,7	339,6	363,4	421,4
92,0	275,0	4,9	1,0	5,2	287,4	79,5	94,8	246,5	174,4	338,0	362,4	420,1
93,0	276,0	4,9	1,0	5,1	286,4	79,6	94,5	245,9	174,3	336,1	360,9	419,0
94,0	277,0	4,8	1,0	5,2	285,0	79,4	94,5	243,8	174,2	335,1	359,3	418,0
95,0	278,0	4,8	0,9	5,3	286,0	79,3	94,4	243,6	174,2	333,2	358,2	417,0
96,0	279,0	4,8	0,9	5,3	286,0	79,4	94,4	242,6	174,0	332,0	357,5	415,8
97,0	280,0	4,7	1,0	5,4	285,6	79,3	94,3	242,3	173,8	331,2	356,3	414,8
98,0	281,0	4,6	1,0	5,4	285,6	79,4	94,2	241,7	173,6	330,2	355,8	413,9

99,0	282,0	4,6	1,1	5,4	284,9	79,3	94,5	241,3	173,4	329,0	355,5	413,5
100,0	283,0	4,6	1,1	5,4	284,9	79,3	94,4	240,7	173,3	328,1	355,3	412,4
101,0	284,0	4,4	1,0	5,5	284,0	79,5	94,6	240,4	173,5	327,0	354,3	412,1
102,0	285,0	4,4	1,1	5,4	285,1	79,6	94,3	240,0	173,4	325,9	354,4	411,8
103,0	286,0	4,4	1,0	5,7	285,0	79,5	94,2	239,8	173,4	324,9	355,1	411,3
104,0	287,0	4,3	1,1	5,0	282,4	79,5	94,0	239,6	173,5	323,5	355,5	410,8
105,0	288,0	4,2	1,1	5,0	278,9	79,5	93,5	237,8	173,5	322,7	355,3	410,3
106,0	289,0	4,2	1,0	5,2	279,5	79,3	93,7	237,6	173,6	322,4	355,2	410,0
107,0	290,0	4,1	0,9	5,3	280,7	79,4	93,6	237,1	173,5	321,3	355,0	409,6
108,0	291,0	4,1	1,1	5,0	276,5	79,2	93,3	236,0	173,7	320,3	354,9	409,5
109,0	292,0	4,0	1,1	4,9	274,5	79,1	93,4	235,0	173,7	319,8	354,3	409,0
110,0	293,0	4,0	1,1	5,0	273,3	79,2	93,2	234,2	174,0	319,1	353,4	408,5
111,0	294,0	3,9	1,0	5,2	273,2	78,8	93,2	233,6	174,0	318,6	352,7	408,2
112,0	295,0	3,9	1,0	5,2	274,8	79,2	93,0	232,8	174,1	318,4	351,3	408,3
113,0	296,0	3,8	0,9	5,5	276,9	79,3	93,1	233,2	174,0	317,3	351,1	407,5
114,0	297,0	3,8	0,9	5,5	279,3	79,2	93,3	234,1	174,3	316,4	350,7	407,7
115,0	298,0	3,7	0,9	5,4	280,6	79,4	93,4	234,2	174,6	316,8	350,8	406,1
116,0	299,0	3,7	0,8	5,5	280,5	79,4	93,6	234,4	174,9	316,2	350,9	405,2
117,0	300,0	3,7	0,9	5,2	279,1	79,2	93,3	234,5	175,2	316,3	350,2	405,2
118,0	301,0	3,6	0,9	5,0	274,9	79,3	93,0	233,2	175,5	315,3	350,7	405,2
119,0	302,0	3,6	1,0	4,6	270,8	79,5	92,5	231,6	175,7	314,1	349,1	404,7
120,0	303,0	3,5	1,1	4,6	266,6	79,5	92,6	229,8	175,8	313,6	348,7	404,1
121,0	304,0	3,5	1,1	4,6	264,2	79,4	92,4	228,4	175,7	313,3	347,5	403,5
122,0	305,0	3,4	1,1	4,6	262,3	79,7	92,2	226,8	175,6	312,4	346,3	402,1
123,0	306,0	3,3	1,1	4,6	260,8	79,7	92,0	225,0	175,8	312,6	344,0	402,5
124,0	307,0	3,3	1,1	4,6	259,6	79,8	91,9	223,6	175,7	311,1	342,6	401,9
125,0	308,0	3,2	1,1	4,6	258,3	79,5	91,8	222,4	175,5	309,6	341,9	401,7
126,0	309,0	3,2	1,1	4,6	257,6	79,3	92,0	221,3	175,4	309,6	340,4	400,6
127,0	310,0	3,2	1,1	4,7	257,1	79,4	91,9	220,4	175,2	309,5	339,2	400,4
128,0	311,0	3,1	1,1	4,7	259,9	79,7	92,2	219,7	175,3	309,0	337,9	400,1
129,0	312,0	3,1	0,8	5,1	262,9	79,4	91,9	220,1	175,2	307,5	337,1	399,4
130,0	313,0	3,0	0,9	5,0	264,9	79,9	91,8	221,8	175,8	309,3	337,9	398,4
131,0	314,0	3,0	0,8	5,2	267,1	79,9	91,8	221,7	175,7	306,9	338,2	396,9
132,0	315,0	2,9	0,8	5,3	269,7	79,7	91,9	222,7	176,2	306,6	338,1	396,0
133,0	316,0	2,9	0,7	5,3	271,8	80,5	92,5	224,7	176,5	304,6	338,6	394,5
134,0	317,0	2,8	0,7	5,2	272,1	80,2	94,3	226,3	177,3	305,2	337,7	394,1
135,0	318,0	2,8	0,7	5,2	272,7	80,1	96,0	227,1	177,9	304,0	337,7	393,7
136,0	319,0	2,7	0,7	5,2	272,9	80,3	97,7	228,1	178,4	304,0	337,6	393,6
137,0	320,0	2,6	0,6	5,4	273,9	80,4	98,9	228,7	178,7	304,3	338,0	392,3
138,0	321,0	2,6	0,7	5,2	273,6	80,5	100,1	229,5	179,3	303,2	336,8	392,7
139,0	322,0	2,6	0,7	5,1	272,2	80,4	101,1	229,0	179,8	302,7	336,8	391,8
140,0	323,0	2,6	0,8	4,9	269,4	80,4	101,8	228,1	180,4	302,1	335,9	392,3
141,0	324,0	2,5	0,8	4,7	267,2	80,6	102,2	227,4	180,7	302,0	335,8	391,2
142,0	325,0	2,5	0,9	4,6	263,0	80,7	102,7	225,1	180,7	301,6	335,3	391,0
143,0	326,0	2,5	0,9	4,5	259,3	80,6	103,4	223,4	180,8	300,8	334,9	390,6
144,0	327,0	2,5	0,9	4,3	256,4	80,7	103,7	221,0	180,5	300,7	334,3	391,1
145,0	328,0	2,5	0,9	4,2	254,4	80,7	103,6	219,1	180,1	299,7	333,9	391,0
146,0	329,0	2,4	0,9	4,2	251,9	80,7	102,4	217,3	179,6	299,1	333,9	390,1
147,0	330,0	2,4	0,8	4,2	250,2	80,8	100,9	215,3	178,9	298,7	333,3	390,1
148,0	331,0	2,4	0,8	4,2	248,7	80,5	99,7	213,5	178,4	298,4	333,4	390,0
149,0	332,0	2,3	0,8	4,2	247,8	80,7	98,7	212,1	178,0	297,4	332,5	389,1
150,0	333,0	2,3	0,8	4,1	246,6	80,8	97,8	210,5	177,6	296,2	332,2	388,6
151,0	334,0	2,3	0,8	4,0	245,6	80,8	97,3	208,9	177,6	297,0	332,0	388,4
152,0	335,0	2,3	0,8	4,0	244,0	80,9	96,6	207,2	178,2	295,4	330,7	387,8
153,0	336,0	2,2	0,7	3,9	242,5	80,6	95,8	205,8	178,3	293,8	330,2	387,2
154,0	337,0	2,2	0,7	3,9	241,2	80,9	95,4	204,6	178,0	293,0	329,2	386,8
155,0	338,0	2,2	0,7	3,9	239,7	80,9	95,1	203,4	177,8	292,1	329,0	385,5
156,0	339,0	2,2	0,7	3,9	238,2	81,0	94,9	201,9	177,4	290,8	328,2	384,1
157,0	340,0	2,2	0,7	3,8	237,3	81,1	94,5	200,9	177,0	289,7	327,2	383,1
158,0	341,0	2,2	0,7	3,8	236,7	80,8	94,1	199,5	176,6	288,7	326,5	381,9
159,0	342,0	2,1	0,7	3,7	235,2	81,0	93,8	198,5	176,2	288,1	325,9	380,4
160,0	343,0	2,1	0,7	3,7	233,7	80,9	93,6	197,0	175,8	288,1	324,8	379,7
161,0	344,0	2,2	0,7	3,7	232,2	81,0	93,2	195,9	175,4	288,0	323,8	378,7
162,0	345,0	2,1	0,7	3,5	231,1	81,2	93,0	194,4	175,0	288,0	322,6	378,4
163,0	346,0	2,1	0,7	3,5	229,6	81,1	92,9	193,3	174,9	286,9	321,0	377,3
164,0	347,0	2,1	0,7	3,5	228,8	81,1	92,6	192,1	174,8	285,4	318,9	377,3
165,0	348,0	2,1	0,7	3,5	227,7	81,0	92,7	191,3	174,4	285,6	317,9	376,7
166,0	349,0	2,0	0,7	3,4	226,1	81,2	93,4	190,2	174,0	283,7	318,0	375,4
167,0	350,0	2,1	0,7	3,4	224,6	80,9	95,0	189,3	174,1	282,8	315,7	374,1
168,0	351,0	2,0	0,7	3,5	223,3	81,0	96,7	188,1	174,3	282,6	314,0	374,0
169,0	352,0	2,0	0,7	3,5	222,5	81,2	98,7	187,4	174,2	282,4	312,2	373,2
170,0	353,0	2,0	0,7	3,5	221,4	81,1	99,8	186,5	174,2	281,9	311,1	372,0
171,0	354,0	2,0	0,7	3,5	220,3	81,1	101,0	186,0	174,4	279,9	309,3	371,3
172,0	355,0	2,0	0,7	3,5	219,1	81,2	101,6	185,1	174,6	279,3	308,6	370,0
173,0	356,0	2,0	0,7	3,5	218,1	81,2	100,8	184,8	174,8	277,4	307,1	368,8
174,0	357,0	2,0	0,7	3,4	217,3	81,2	99,5	183,7	174,6	278,3	306,0	367,9
175,0	358,0	1,9	0,7	3,4	216,4	81,1	98,5	183,3	174,7	276,0	304,2	367,1
176,0	359,0	1,9	0,7	3,4	215,8	81,1	97,4	182,6	174,6	275,9	303,2	366,2
177,0	360,0	1,9	0,7	3,4	215,2	81,1	96,5	181,7	174,5	275,1	301,3	365,7
178,0	361,0	1,9	0,7	3,4	215,0	81,1	96,0	181,1	174,2	274,8	300,5	364,7
179,0	362,0	1,9	0,7	3,5	214,6	81,3	95,5	180,8	174,0	272,6	298,7	363,8
180,0	363,0	1,9	0,7	3,5	214,0	80,9	94,7	179,8	173,7	272,1	297,3	362,8
181,0	364,0	1,8	0,7	3,5	213,8	81,0	94,4	179,3	173,6	271,3	296,3	361,8
182,0	365,0	1,8	0,7	3,5	213,4	81,2	94,0	178,8	173,5	271,0	295,4	361,4
183,0	366,0	1,8	0,7	3,5	212,8	81,2	93,7	178,7	173,8	269,0	293,8	360,4
184,0	367,0	1,8	0,7	3,6	212,4	81,1	93,3	177,5	174,0	269,0	293,2	359,5
185,0	368,0	1,8	0,7	3,5	212,1	81,0	93,2	177,0	174,3	268,1	292,8	358,0
186,0	369,0	1,8	0,7	3,6	211,6	81,1	93,0	176,5	174,5	267,4	291,9	357,6
187,0	370,0	1,8	0,7	3,6	211,3	81,2	92,8	176,1	175,0	266,4	291,1	356,4
188,0	371,0	1,8	0,7	3,4	210,6	81,2	92,6	175,8	175,5	265,3	290,1	355,8
189,0	372,0	1,8	0,8	3,3	209,7	81,1	92,5	175,1	176,0	264,4	289,7	354,4
190,0	373,0	1,8	0,7	3,3	209,1	81,0	92,3	174,9	176,5	264,3	289,3	353,8
191,0	374,0	1,7	0,8	3,3	208,3	81,1	92,2	174,4	176,9	263,5	289,3	352,4
192,0	375,0	1,7	0,8	3,3	207,5	80,9	91,9	173,8	177,6	262,7	288,5	351,9
193,0	376,0	1,7	0,8	3,3	206,5	81,2	91,8	173,0	177,8	263,2	288,1	351,4
194,0	377,0	1,7	0,8	3,3	205,7	81,4	91,6	172,5	178,1	262,6	288,3	350,4
195,0	378,0	1,6	0,7	3,3	205,0	81,2	91,5	172,0	178,9	261,1	287,6	349,9
196,0	379,0	1,7	0,7	3,2	203,8	81,2	91,4	171,2	179,4	260,8	287,3	349,6
197,0	380,0	1,7	0,7	3,2	203,0	81,2	91,3	170,6	179,8	258,3	286,7	348,8
198,0	381,0	1,6	0,7	3,2	202,1	81,1	91,0	170,0	180,0	257,4	286,1	347,6
199,0	382,0	1,6	0,7	3,1	201,5	81,1	91,1	169,4	180,4	256,2	285,9	345,8
200,0	383,0	1,6	0,7	3,1	200,6	80,8	90,7	168,7	180,7	256,0	285,1	345,8

201,0	384,0	1,6	0,7	3,1	199,8	81,0	90,7	168,3	180,9	254,4	284,6	344,9
202,0	385,0	1,6	0,7	3,1	199,2	81,0	90,6	167,8	181,3	253,2	284,0	344,3
203,0	386,0	1,5	0,7	3,1	198,6	81,1	90,4	167,4	181,4	252,7	283,4	343,9
204,0	387,0	1,6	0,7	3,1	198,1	80,8	90,5	166,9	181,7	251,6	283,0	343,0
205,0	388,0	1,6	0,7	3,1	197,5	80,9	90,6	166,4	181,7	251,3	283,8	341,5
206,0	389,0	1,6	0,7	3,1	196,5	81,1	92,6	165,7	181,6	251,3	284,1	339,0
207,0	390,0	1,5	0,7	3,1	195,9	81,2	94,7	165,5	181,7	250,2	283,3	339,1
208,0	391,0	1,5	0,7	3,2	195,2	81,3	96,5	165,5	182,0	248,6	283,1	337,9
209,0	392,0	1,5	0,7	3,2	194,7	81,2	97,8	165,2	182,1	248,4	282,9	337,3
210,0	393,0	1,5	0,7	3,2	193,9	81,2	99,1	165,0	182,4	247,1	282,4	337,0
211,0	394,0	1,5	0,7	3,2	193,2	81,3	99,6	164,7	182,6	246,2	282,0	336,9
212,0	395,0	1,4	0,7	3,2	192,5	81,0	98,5	164,2	182,5	245,1	282,7	334,7
213,0	396,0	1,4	0,7	3,2	192,1	80,9	97,4	163,8	182,6	244,6	282,3	334,5
214,0	397,0	1,5	0,7	3,2	191,8	80,9	96,4	163,4	182,5	243,8	281,9	334,1
215,0	398,0	1,4	0,7	3,1	191,5	81,1	95,5	162,9	182,4	242,9	281,3	334,0
216,0	399,0	1,4	0,7	3,1	191,1	81,1	94,8	162,3	182,2	242,4	281,5	332,8
217,0	400,0	1,4	0,7	3,1	191,0	81,2	94,1	161,9	182,4	241,7	281,3	331,4
218,0	401,0	1,4	0,7	3,1	190,6	81,3	93,6	161,4	182,4	241,8	281,3	330,7
219,0	402,0	1,4	0,7	3,1	190,3	81,2	93,1	161,3	182,6	240,2	281,0	329,9
220,0	403,0	1,3	0,7	3,1	190,0	81,2	92,7	160,8	182,7	239,7	280,4	329,5
221,0	404,0	1,3	0,7	3,1	189,6	81,0	92,3	160,6	182,8	238,3	280,4	328,5
222,0	405,0	1,3	0,7	3,2	189,1	81,2	91,9	160,4	183,1	237,8	280,2	327,5
223,0	406,0	1,3	0,7	3,1	188,9	81,0	91,7	160,0	183,2	237,3	279,8	326,5
224,0	407,0	1,3	0,7	3,1	188,2	81,1	91,5	159,6	183,4	236,7	279,8	325,9
225,0	408,0	1,3	0,7	3,1	188,0	81,1	91,2	159,3	183,4	236,3	279,3	325,4
226,0	409,0	1,3	0,7	3,1	187,5	81,2	91,1	159,3	183,7	235,0	279,3	325,1
227,0	410,0	1,3	0,7	3,1	187,2	81,1	91,0	159,3	183,8	234,8	279,1	324,5
228,0	411,0	1,3	0,7	3,2	187,0	81,0	90,8	158,8	184,1	233,7	278,6	324,1
229,0	412,0	1,3	0,7	3,2	186,6	80,9	90,8	158,5	184,3	233,1	278,7	323,2
230,0	413,0	1,2	0,7	3,2	186,1	80,9	90,5	158,4	184,5	232,8	278,4	322,6
231,0	414,0	1,2	0,7	3,2	185,8	80,8	90,5	158,0	184,7	232,0	278,3	321,7
232,0	415,0	1,2	0,7	3,2	185,9	80,7	90,3	157,9	185,0	231,5	278,0	321,4
233,0	416,0	1,2	0,7	3,2	185,6	80,8	90,2	157,8	185,3	230,9	278,2	320,7
234,0	417,0	1,2	0,7	3,2	185,4	80,8	90,2	157,5	185,5	230,6	278,0	319,7
235,0	418,0	1,2	0,6	3,2	185,1	80,9	90,1	157,2	185,8	229,7	277,7	318,8
236,0	419,0	1,2	0,6	3,2	184,7	81,0	90,0	156,9	186,0	229,3	277,6	318,2
237,0	420,0	1,2	0,6	3,2	184,2	80,7	89,8	156,7	186,4	228,7	277,3	317,4
238,0	421,0	1,1	0,6	3,2	184,0	80,9	89,8	156,4	186,9	228,0	276,9	316,7
239,0	422,0	1,1	0,7	3,2	184,2	80,9	89,7	156,4	187,4	227,6	276,5	316,2
240,0	423,0	1,1	0,7	3,2	183,8	80,7	89,6	156,2	187,9	227,2	276,5	315,5
241,0	424,0	1,1	0,7	3,2	183,8	80,5	89,6	156,0	188,5	227,3	276,3	314,5
242,0	425,0	1,1	0,7	3,3	183,8	80,8	89,5	155,9	188,8	227,3	276,7	313,3
243,0	426,0	1,1	0,7	3,3	184,3	80,9	89,5	155,9	189,7	226,1	275,9	312,9
244,0	427,0	1,1	0,8	3,3	184,0	80,8	89,4	155,8	190,1	225,8	275,5	312,3
245,0	428,0	1,1	0,8	3,3	184,2	80,9	89,4	156,1	191,0	225,0	275,2	312,0
246,0	429,0	1,0	0,8	3,4	184,3	80,9	89,3	155,6	191,5	225,0	274,7	311,5
247,0	430,0	1,1	0,8	3,4	184,4	80,8	89,2	155,8	192,3	224,8	274,5	310,9
248,0	431,0	1,0	0,8	3,4	184,9	80,6	89,2	155,9	192,8	224,2	274,4	309,6
249,0	432,0	1,0	0,8	3,4	185,0	80,9	89,2	156,2	193,7	224,0	273,8	309,5
250,0	433,0	1,0	0,8	3,4	185,2	80,8	89,2	156,2	194,4	223,6	274,3	308,0
251,0	434,0	1,0	0,8	3,4	185,0	81,3	90,2	155,9	194,9	223,4	274,8	307,0
252,0	435,0	1,0	0,8	3,4	185,2	81,0	92,4	156,3	196,0	223,8	274,4	306,2
253,0	436,0	0,9	0,8	3,5	185,4	81,1	94,3	156,5	197,1	223,2	273,6	306,4
254,0	437,0	0,9	0,9	3,6	186,4	81,2	96,4	156,6	198,4	222,6	274,0	305,0
255,0	438,0	0,9	0,9	3,7	187,4	81,2	97,4	157,0	199,6	222,6	273,8	304,6
256,0	439,0	0,9	0,9	3,8	188,2	81,2	98,8	157,6	201,0	222,2	273,8	303,5
257,0	440,0	0,9	0,9	3,8	189,3	81,1	98,0	158,0	202,4	222,0	274,3	303,1
258,0	441,0	0,9	0,9	3,8	190,3	81,3	96,9	158,7	203,5	223,4	274,9	302,4
259,0	442,0	0,8	0,9	3,8	191,2	81,4	96,2	159,4	204,9	222,2	274,9	302,3
260,0	443,0	0,8	0,9	3,8	192,0	81,2	95,2	159,7	205,9	222,6	275,1	301,4
261,0	444,0	0,8	0,9	3,8	193,1	81,0	94,2	160,3	207,0	222,1	274,8	301,6
262,0	445,0	0,8	0,9	3,8	193,6	81,0	93,6	160,9	207,9	221,9	274,6	301,9
263,0	446,0	0,8	0,9	3,8	194,6	81,0	93,1	161,6	208,9	221,7	274,7	302,1
264,0	447,0	0,8	0,9	3,8	195,7	81,0	92,7	162,3	209,5	221,8	275,1	301,2
265,0	448,0	0,8	0,9	3,8	196,5	81,0	92,4	162,7	210,6	221,9	275,4	300,8
266,0	449,0	0,7	0,8	3,8	197,3	81,0	92,1	163,3	211,4	222,0	275,8	300,3
267,0	450,0	0,7	0,8	3,9	198,5	81,0	91,8	164,0	212,4	221,8	275,7	300,3
268,0	451,0	0,7	0,8	3,9	199,3	81,0	91,6	164,2	213,4	222,3	276,0	300,2
269,0	452,0	0,7	0,8	3,8	199,5	80,9	91,4	164,9	214,2	222,0	276,8	299,9
270,0	453,0	0,7	0,8	3,8	199,5	81,0	91,2	165,0	215,3	222,7	277,1	298,8
271,0	454,0	0,7	0,8	3,8	200,0	81,0	91,1	165,7	216,5	222,5	277,2	298,8
272,0	455,0	0,6	0,8	3,9	200,5	81,1	91,1	165,8	217,5	223,3	277,9	298,3
273,0	456,0	0,6	0,8	3,8	200,0	81,0	90,9	165,8	218,3	223,5	278,6	297,1
274,0	457,0	0,6	0,8	3,8	200,2	81,2	90,7	165,9	219,2	224,6	278,2	297,6
275,0	458,0	0,6	0,8	3,8	200,7	81,1	90,6	166,0	220,2	224,3	278,2	298,0
276,0	459,0	0,6	0,8	3,8	200,8	81,3	90,5	166,3	221,4	224,1	278,3	298,1
277,0	460,0	0,6	0,8	3,8	200,7	81,3	90,4	166,5	222,3	224,5	278,6	297,1
278,0	461,0	0,5	0,7	3,6	199,6	81,5	90,5	166,4	223,4	224,2	279,1	296,8
279,0	462,0	0,6	0,7	3,5	199,4	81,3	90,5	166,3	224,5	224,8	278,2	297,7
280,0	463,0	0,5	0,7	3,5	199,0	81,1	90,2	166,0	225,9	224,8	277,7	298,5
281,0	464,0	0,5	0,7	3,6	198,8	80,8	90,1	166,1	226,6	225,3	277,7	298,4
282,0	465,0	0,5	0,7	3,6	198,8	80,7	90,0	166,1	227,3	225,1	277,5	298,3
283,0	466,0	0,5	0,7	3,6	198,7	80,6	90,0	165,9	227,9	225,5	277,2	298,4
284,0	467,0	0,5	0,7	3,6	198,7	80,6	89,9	166,0	228,2	225,7	276,9	298,3
285,0	468,0	0,5	0,7	3,5	199,1	80,6	89,9	166,2	228,4	226,0	276,7	298,9
286,0	469,0	0,5	0,7	3,5	198,8	80,6	89,9	166,0	228,6	226,7	276,0	299,1
287,0	470,0	0,5	0,7	3,5	198,4	80,6	89,8	166,1	228,7	227,0	275,4	299,0
288,0	471,0	0,4	0,7	3,5	198,1	80,6	89,7	166,0	228,9	227,4	275,0	299,3
289,0	472,0	0,4	0,7	3,5	197,9	80,6	89,7	165,9	228,8	227,7	274,7	299,2
290,0	473,0	0,4	0,7	3,5	197,8	80,6	89,6	165,9	228,8	228,1	274,2	299,1
291,0	474,0	0,4	0,7	3,5	198,0	80,6	89,5	165,7	228,6	228,6	273,9	298,9
292,0	475,0	0,4	0,7	3,5	197,9	80,5	89,6	165,7	228,4	229,1	273,3	298,9
293,0	476,0	0,4	0,7	3,5	197,7	80,6	89,6	165,7	228,4	229,1	272,8	298,8
294,0	477,0	0,4	0,7	3,5	197,4	80,6	89,5	165,2	227,9	229,8	272,4	298,9
295,0	478,0	0,3	0,7	3,5	197,2	80,6	89,5	165,0	227,7	230,0	271,9	298,9
296,0	479,0	0,3	0,7	3,5	197,2	80,6	89,4	165,0	227,3	230,1	271,4	298,5
297,0	480,0	0,3	0,7	3,5	197,0	80,6	89,4	164,5	226,6	231,2	271,3	298,2
298,0	481,0	0,3	0,7	3,5	196,9	80,6	89,2	164,2	226,3	231,3	270,7	297,8
299,0	482,0	0,3	0,7	3,5	196,9	80,7	89,3	164,2	226,1	231,5	270,4	297,9
300,0	483,0	0,3	0,7	3,5	197,1	80,6	89,2	164,1	225,6	231,9	269,7	297,7
301,0	484,0	0,3	0,7	3,6	197,5	80,4	89,2	164,5	225,3	232,4	269,9	296,9
302,0	485,0	0,2	0,7	3,6	197,2	80,6	89,3	164,5	225,0	232,6	269,0	297,3

303,0	486,0	0,2	0,7	3,6	197,3	80,5	89,1	164,3	224,8	233,3	268,4	297,4
304,0	487,0	0,2	0,7	3,6	197,3	80,6	89,2	164,2	224,5	233,8	267,7	297,5
305,0	488,0	0,2	0,7	3,5	197,3	80,6	89,1	163,8	224,2	234,5	267,9	297,0
306,0	489,0	0,2	0,7	3,6	197,4	80,7	89,2	163,5	223,6	235,0	267,4	296,9
307,0	490,0	0,2	0,7	3,5	197,0	80,8	89,9	163,4	223,3	235,7	267,7	296,2
308,0	491,0	0,1	0,7	3,5	196,8	80,8	91,8	163,6	223,2	236,8	267,2	295,7
309,0	492,0	0,1	0,7	3,5	196,8	81,1	94,2	163,7	222,9	237,3	266,4	295,9
310,0	493,0	0,1	0,7	3,5	196,8	81,2	96,0	163,7	222,7	237,9	266,0	295,7
311,0	494,0	0,1	0,7	3,5	196,1	81,2	97,7	164,0	222,4	237,7	265,2	295,9
312,0	495,0	0,1	0,7	3,6	196,0	81,2	98,5	163,9	221,8	238,6	265,4	294,6
313,0	496,0	0,1	0,7	3,6	195,9	81,3	97,9	164,1	221,7	238,6	264,8	294,6
314,0	497,0	0,1	0,7	3,6	195,9	81,3	96,7	163,8	221,4	239,2	264,0	294,5
315,0	498,0	0,1	0,7	3,6	196,0	81,1	95,7	163,9	220,7	239,5	263,7	294,2
316,0	499,0	0,1	0,7	3,5	196,3	81,0	94,7	164,1	220,4	239,9	263,5	294,0
317,0	500,0	0,1	0,7	3,5	196,6	81,1	94,1	163,9	219,8	240,4	262,6	294,1
318,0	501,0	0,0	0,7	3,5	196,7	80,9	93,4	164,0	219,4	240,8	262,4	293,8

Manufacturer: IHP
Model: IRON STRIKE

Run: 4
Project #: PI 20165
Test Duration: 318 min

	HHV	LHV
Eff	#DIV/0!	#DIV/0!
Comb Eff	#DIV/0!	#DIV/0!
HT Eff	#DIV/0!	#DIV/0!
Output	#DIV/0!	kJ/h
Burn Rate	1,24	kg/h
Grams CO	#DIV/0!	g
Input	25 083	kJ/h
MC wet	16,91	

Note: In the “Input data”, "Calc. % O_2", "Fuel Properties", and “Mass Balance” columns, [e], [d], [g], [a]. [b], [c], [h], [u], [w], [j], and [k] refer to their respective variables in Clauses 13.7.3

Ultimate CO_2
$CO_{2\text{-}ult}$ 19,86
F_0
#DIV/0!

Heat Output:	#DIV/0!	Btu/h	#DIV/0!	kJ/h
Heat Input:	23 794	Btu/h	25 083	kJ/h
Burn Duration:	5,30	h		
Burn Rate:	2,74	lb/h	1,241	kg/h
Stack Temp:	300,9	Deg. F	149,4	Deg. C

Overall Heating Efficiency:	#DIV/0!
Combustion Efficiency:	#DIV/0!
Heat Transfer Efficiency:	#DIV/0!

Air Fuel Ratio (A/F)	
Dry Molecular Weight (M_d)	#DIV/0!
Dry Moles Exhaust Gas (N_r):	0,00
Air Fuel Ratio (A/F)	#DIV/0!

POLYTESTS
TESTING THROUGH YOUR REALITY

Date: 2018-05-28 Manufacturer: IHP Model: IRON STRIKE
Project #: PI 20165 Run: 4 Tech: MM Reviewer: DP

- Start Fire 1 minute torch
- close Door immediatly
- Fan off
- At 24 LBS insert load
- close Door immediatly
- At 15.8 LBS open Fan
- At 36 LBS stop Fan
- At 200 LBS insert load
- At 3 min close air inlet 1/4
At 7 min close air inlet 1/2
At 13 min close air inlet 3/4
At 15 min close air inlet and at the tape
At 30 minute open Fan

TEST LOAD CONFIGURATION

POLYTESTS
TESTING THROUGH YOUR REALITY

PRE / POST CHECKS

Date: 2018-05-28 Manufacturer: IHP Model: Mon Stanke

Project #: PI 20165 Run: 4 Tech: MM Reviewer: SP

	Equipment #	Time	12%	22%
Moisture Meter Calibration Check:	EM-191	7:00	ok	ok

Facility Conditions:

	Pre-Test	Post-Test
Air Velocity from less than 2 feet	9 (max50 Fpm)	8 (max50 Fpm)
Smoke Capture Check	ok	
Picture	4 sides ok	ok

Wood Heater Conditions:

Date Wood Heater Stack Cleaned	2018-05-23
Date Dilution Tunnel Cleaned	2018-05-23
Induced Draft Check (max 0.005 H2O)	ok
Traverse before ignition	ok

Temperature System:

Ambient (65°-90°F) ok °F

Proportional Checks:

Thermocouple check	ok
Pitot Clean	ok
Pitot verification	ok

Sampling Train ID Numbers:

	High fire test			Medium low fire test		
	1st hour	Train 1	Train 2	1st hour	Train 1	Train 2
Probe				16	33	43
Filter Front				800	802	804
Filter Back				801	803	805
Filter Thermocouple				11	11	12
Filter (80°F ≥ <90°F)				ok	ok	Exact

POLYTESTS
TESTING THROUGH YOUR REALITY

SAMPLING EQUIPMENT CHECK OUT

Date: 2018-05-28 Manufacturer: IBP Model: Mon Stack

Project #: PI 20165 Run: 4 Tech: M Reviewer: BP

Leakage Checks Tunnel Samplers

High fire test	System 1st hour		System 1		System 2	
Unplugged Flow Rate = .25cfm	Pre-Test ASTM (-15) CSA B415 (-5)	Post-Test (max test)	Pre-Test ASTM (-15) CSA B415 (-5)	Post-Test (Max test)	Pre-Test ASTM (-15) CSA B415 (-5)	Post-Test (Max test)
Vacuum (inches Hg.)						
Final 1minute DGM (Liter)						
Initial 1minute DGM (Liter)						
Change © (Liter)						
Allowable leakage .04 x Sample rate or 0.28Lpm CSA B415 (0.56)						
Check OK						

Low medium fire test	System 1st hour		System 1		System 2	
Unplugged Flow Rate = .25cfm	Pre-Test ASTM (-15) CSA B415 (-5)	Post-Test (max test)	Pre-Test ASTM (-15) CSA B415 (-5)	Post-Test (Max test)	Pre-Test ASTM (-15) CSA B415 (-5)	Post-Test (Max test)
Vacuum (inches Hg.)	-15	-15	-15	-15	-15	-15
Final 1minute DGM (Liter)	681370.44	682940.52	633846.66	682940.85	633846.65	635464.80
Initial 1minute DGM (Liter)	681370.44	682940.51	633846.66	682940.75	633846.65	635464.80
Change © (Liter)	Ø	0.01	Ø	0.10	Ø	Ø
Allowable leakage .04 x Sample rate or 0.28Lpm CSA B415 (0.56)						
Check OK	ok	ok	ok	ok	ok	ok

POLYTESTS
TESTING THROUGH YOUR REALITY

SAMPLING EQUIPMENT CHECK OUT

Date: 2018-05-28 Manufacturer: IAP Model: Iron Strike

Project #: PI 2165 Run: 4 Tech: MN Reviewer: BS

Leakage Checks Flue Gas Sampler

Plugged Probe	Pre-Test	Post Test
Vacuum (inches Hg.)	-5	-5
Rotameter Reading (mml/min.)	0	0
Flow Rate (lpm)	1.5	1.5
Allowable (.02 x Sample Rate)	30	30
Check OK	ok	ok

Leakage Checks Pitot

Plugged Probe	Pre Test 3 H2o static	Pre Test 0.4-0.5 H2o velocity	Post Test 3 H2o Static	Post Test 0.4-0.5 H2o velocity
Vacuum (inches Hg.)	3	.4	3	.5
Check OK (no change after 15 sec.)	ok	ok	ok	ok

POLYTESTS
TESTING THROUGH YOUR REALITY

PRE-TEST SCALE AUDIT

Date: 2018-05-28 Manufacturer: TAP Model: IRON SMOKE

Project #: pI 20165 Run: 4 Tech: MM Reviewer: DP

Scale Type	Audit		Measured Weight
	Equipment #	Weight	
Platform	EM-090	44 lbs, Class F	44 lbs
Wood	EM-096	44 lbs, Class F	44 lbs
Analytical	EM 128	100 mg, Class S	100 mg
Analytical	EM 129	200 g, Class S	200 g

LIMITS OF WEIGHT RANGES

ANALYTICAL SCALE: ..... 50%-150% of dry filter weight, ± 0.1 mg
PLATFORM SCALE .....20%-80% of ideal test load weight, ± 0.1 lbs or 1%
WOOD SCALE .....20%-80% of ideal test load weight, ± 0.01 lbs or 1%

POLYTESTS
TESTING THROUGH YOUR REALITY

CONTINUOUS ANALYZERS

Date: 2018-05-28 Manufacturer: IHp Model: Iron Strike

Project #: pI 20165 Run: 4 Tech: MM Reviewer: DP

FOR TUNNELS < 12 in

Barometric pressure (P_{bar}) 1009 (KPa.) Static pressure (P_q) 6.13 (inches w.c.)
Inside diameter: Port A _____ Port B _____.
Tunnel cross sectional area: .1963Ft^2
Pitot tube type: Standard

Traverse Point	Position (inches)			Velocity Head Δ_p (inches H_2O)	Tunnel Temperature (°F)	
	6 po	7 po	8 po			
A- Centroid	3.00	3.50	4	0.065	72.43	
B - Centroid	3.00	3.50	4	0.064	72.54	
A-1	0.40	0.50	0.50	0.054	72.30	
A-2	1.50	1.75	2	0.057	72.29	
A-3	4.50	5.25	6	0.063	~~75.55~~ 72.55	72.55 mm
A-4	5.60	6.5	7.5	0.053	~~75.59~~	72.59 mm
B-1	0.40	0.50	0.50	0.054	~~75.08~~	73.08 mm
B-2	1.50	1.75	2	0.055	73.90	
B-3	4.50	5.25	6	~~0.053~~ 0.063 mm	73.77	
B-4	5.60	6.5	7.5	0.054	73.19	
				AVERAGE		

$$v_s = K_p C_p (\sqrt{\Delta p})_{avg} \sqrt{\frac{(T_s)_{avg}}{P_s M_s}}$$

Where,
C_p = pitot tube coefficient, dimension less = 0.99 for standard pitot.
Δ_p = manometer reading (inches H_2O)
T_s = average absolute dilution tunnel temperature (°F + 460)
P_s = absolute dilution tunnel gas pressure or $P_{bar} + P_{qg}$
P_q = static pressure $\frac{\text{in. } H_2O}{\{13.6\}}$
M_s = 28.56, wet molecular weight of stack gas (alternatively, it may be measured)
K_p = 85.49 pitot tube constant, (conversion factor for English units)

_$\Delta_p$avg. = average of the square roots of the velocity heads (Δ_p) measured at each traverse point.

POLYTESTS
TESTING THROUGH YOUR REALITY

CONTINUOUS ANALYZERS

Date: 2018-05-28 Manufacturer: IHP Model: IRON STRIKE

Project #: PI 20165 Run: 4 Tech: MM Reviewer: BP

Pre-Test (Adjust and Record)

	ZERO		SPAN		CAL. (Record Only)	
CO	0	0	2.950	3.000	0.986	1.000
Tolerance CO		+/- 0.02		+/- 0.15		+/- 0.05
CO_2	0	0	13.98	18.00	9.81	10.00
Tolerance CO2		+/- 0.02		+/- 0.5		+/- 0.5
O_2 informative CSA B415 calculated value	na	na	na	na	na	na
	Actual	Should Be	Actual	Should Be	Actual	Should Be

Post Test (Record Only)

	Zero	Span	Cal.	Zero Drift	Limit	Span Drift	Limit	Cal. Drift	Limit	OK?	Not OK*
CO	0	2.959	0.990	0	0.02	0.009	0.15	0.004	0.05	✓	
CO_2	0	13.98	9.89	0	0.02	0	0.5	0.08	0.5	✓	

POLYTESTS
TESTING THROUGH YOUR REALITY

TEST DATA LOG

Date: 2018-05-28 Manufacturer: IHP Model: IRON STRIKE

Project #: PI 20165 Run: 4 Tech: MM Reviewer: DP

RAW DRY GAS METER READINGS

		System 1	System 2	Blank
High fire test	Final (Liter)			
	Initial (Liter)			
Low medium fire test	Final (Liter)	682939,66	635462,95	728,44
	Initial (Liter)	681371,68	633849,08	700,85

AMBIENT CONDITIONS

	Before	After
Barometer (kPa):	~~1009~~ 100,9 mm	100,6
Dry Bulb (F):	81,82	85,64
Humidity (%):	36,0	~~81,82~~ 33 mm

POLYTESTS
TESTING THROUGH YOUR REALITY

FUEL DATA

Date: 2018-05-28 Manufacturer: IHP Model: IRON SMOKE

Project #: PJ 20165 Run: 4 Tech: MM Reviewer: DP

FUEL DESCRIPTION:

Type of wood:

KINDLING AND START-UP LOAD

Piece Size	Weight		Meter Moisture Content (% dry)				
x x 16 in.	1830	lbs.	9,3	9,1	9,6	9,5	9,6
x x 16 in.	433	lbs.	19,6	19,9	20,0	20,1	20,0
x x in.		lbs.					
x x in.		lbs.					
x x in.		lbs.					
x x in.		lbs.					
x x in.		lbs.					
x x in.		lbs.					
x x in.		lbs.					

HIGHFIRE TEST LOAD

Piece Size	Weight		19,3	Meter Moisture Content (% dry)			
350 x 350 x 16 in.	2954	lbs.	~~188~~	19,0	19,9	20,0	19,6
375 x 375 x 16 in.	3068	lbs.	198	19,5	19,9	19,6	20,0
350 x 350 x 16 in.	3076	lbs.	226	20,8	19,5	20,9	21,8
x x in.		lbs.					
405 x 450 x 16 in.	6052	lbs.	20,6	19,9	19,3	19,8	20,5
x x in.		lbs.					
x x in.		lbs.					
x x in.		lbs.					
x x in.		lbs.					

POLYTESTS
TESTING THROUGH YOUR REALITY

FUEL DATA

Date: 2018-05-28 Manufacturer: IHP Model: Iron Strike

Project #: PI 20165 Run: 4 Tech: MM Reviewer: DP

FUEL DESCRIPTION:

Type of wood:

LOW OR MEDIUM TEST LOAD

Piece Size				Weight		Meter Moisture Content (% dry)				
3	x 3.25	x 16	in.	3.12	lbs.	20.6	20.2	20.7	21.0	21.8
3	x 4.00	x 16	in.	3.50	lbs.	19.1	19.8	19.3	19.2	19.1
2.5	x 3.25	x 16	in.	3.55	lbs.	19.6	19.9	20.0	19.8	19.9
	x	x	in.		lbs.					
4.25	x 4.50	x 16	in.	5.20	lbs.	21.2	20.9	21.8	21.0	21.3
2.50	x 2.50	x 16	in.	2.318	lbs.	19.6	19.7	19.9	19.8	19.3
	x	x	in.		lbs.					
	x	x	in.		lbs.					
	x	x	in.		lbs.					
	x	x	in.		lbs.					
	x	x	in.		lbs.					
	x	x	in.		lbs.					
	x	x	in.		lbs.					
	x	x	in.		lbs.					

POLYTESTS
TESTING THROUGH YOUR REALITY

DILUTION TUNNEL PARTICULATE SAMPLER DATA

Date:_____ Manufacturer:_____ Model:_____

Project #:_____ Run:_____ Tech:_____ Reviewer:_____

		HIGHFIRE TEST FILTERS								
		SYSTEM 1 – 1st hour				SYSTEM 1				
Pre-test Weight Record		Probe & Housing Number	Front Filter Number	Back Filter Number	gaskets	Probe & Housing Number	Front Filter Number	Back Filter Number	gaskets	Blanck
Date	Time									

		SYSTEM 1 – 1st hour				SYSTEM 1				
Post-test Weight Record		Probe & Housing Number	Front Filter Number	Back Filter Number	gaskets	Probe & Housing Number	Front Filter Number	Back Filter Number	gaskets	Blanck
Date	Time									

POLYTESTS
TESTING THROUGH YOUR REALITY

DILUTION TUNNEL PARTICULATE SAMPLER DATA

Date:_____ Manufacturer:_____ Model:_____

Project #: _____ Run:_____ Tech:_____ Reviewer:_____

		HIGH FIRE TEST FILTERS			
		SYSTEM 2			
Pre-test Weight Record		Probe & Housing Number	Front Filter Number	Back Filter Number	gaskets
Date	Time				

		SYSTEM 2			
Post-test Weight Record		Probe & Housing Number	Front Filter Number	Back Filter Number	gaskets
Date	Time				

POLYTESTS
TESTING THROUGH YOUR REALITY

DILUTION TUNNEL PARTICULATE SAMPLER DATA

Date: 2018-05-25 Manufacturer: HP Model: Iron Strike

Project #: pI 20165 Run: 4 Tech: M M Reviewer: BP

		LOW OR MEDIUM TEST FILTERS								
		SYSTEM 1 – 1st hour				SYSTEM 1				
Pre-test Weight Record		Probe & Housing Number	Front Filter Number	Back Filter Number	gaskets	Probe & Housing Number	Front Filter Number	Back Filter Number	gaskets	Blanck
Date	Time	16	800	801	39	33	802	803	40	806
2018-05-25	17:00	108,7544	0,0842	0,0843	35,3342	109,3630	0,0839	0,0837	35,1591	0,0840
2018-05-28	9:00	108,7545	0,0842	0,0843	35,3341	109,3629	0,0839	0,0837	35,1591	0,0840

		SYSTEM 1 – 1st hour				SYSTEM 1				
Post-test Weight Record		Probe & Housing Number	Front Filter Number	Back Filter Number	gaskets	Probe & Housing Number	Front Filter Number	Back Filter Number	gaskets	Blanck
Date	Time	16	800	801	39	33	802	803	40	806
2018-05-28	17:00	108,7546	0,0859	0,0838	35,3380	109,3632	0,0995	0,0835	35,1616	0,0842
2018-06-04	8:00	108,7545	0,0854	0,0832	35,3367	109,3632	0,0990	0,0833	35,1604	0,0842
2018-06-13	8:00	108,7545	0,0853	0,0831	35,3367	109,3632	0,0989	0,0833	35,1604	0,0842

POLYTESTS
TESTING THROUGH YOUR REALITY

DILUTION TUNNEL PARTICULATE SAMPLER DATA

Date: 2018-05-25 Manufacturer: IHP Model: IRon Strike

Project #: PT-20165 Run: 4 Tech: [signature] Reviewer: DP

		LOW OR MEDIUM FIRE TEST FILTERS			
		SYSTEM 2			
Pre-test Weight Record		Probe & Housing Number	Front Filter Number	Back Filter Number	gaskets
Date	Time	43	804	805	~~8~~ 41 mm
2018-05-25	17:00	109,1650	0,0853	0,0885	35,0821
2018-05-28	9:00	109,1652	0,0853	0,0885	35,0821

		SYSTEM 2			
Post-test Weight Record		Probe & Housing Number	Front Filter Number	Back Filter Number	gaskets
Date	Time	43	804	805	41
2018-05-28	17:30	109,1657	0,1033	0,0874	35,0861
2018-06-04	8:00	109,1657	0,1028	0,0872	35,0849
2018-06-13	8:00	109,1657	0,1027	0,0872	35,0849

Paramètres

Tous les facteurs de corrections et autres paramètres qui peuvent être modifiés par l'utilisateur du fichier sont regroupés ici.

Code verrouillage:	IHP

Description du test

Test standard	EPA
Run #	5
Date	29-05-2018
Technicien	M.M
Project #	PI 20165

Description de l'unité

Manufacturier	IHP	
Modèle	IRON STRIKE	
Combustion system	Non-Cat	
Appliance type	wood stove	
Firebox volume	1,51	cu ft.
Appliance weight empty	n.a	lbs
Fan (no, Standard, Option)	optional	

Paramètres du test

Logging time	1	min
Manufacturer's rated heat output	n.a	BTU/h Donnée fournie par le manfacturier
Targeted category	1	
Targeted output	n.a	BTU/h
Cp steel	n.a	BTU/lb-°F

Échantillonnage

Blank sampling rate	0,20	cuft/min
Internal probe diameter	0,18	in.
Calibration Factor (DGM #1):	0,988	Dimensionless
Equipment number (DGM #1):	em 178	
Calibration Factor (DGM #2):	0,991	Dimensionless
Equipment number (DGM #2):	em 179	
Calibration Factor (DGM #3):	0,996	
Equipment number (DGM #3):	em 070	Dimensionless

Tunnel

Targeted tunnel flow rate	300	scfm
Tunnel diameter	8	in.
Molecular weight	28,78	May be assumed to be 28,78 (EPA) Si B-415 = 29
Pitot tube type	Standard	
Pitot tube coefficient	0,99	Dimensionless

Project nu.	PI 20165
Date	29-05-2018
Technicien	m.m

Fuel data

Fuel type	Cord	
Fuel specie	Oak	
HHV	20207,0	kJ/kg
%C	49,5	
%H	6,6	
%O	43,7	
%Ash	0,2	
HHV	8689,9	Btu/lb
LHV	7600,4	Btu/lb

Default Fuel Values

	D. Fir	Oak/Maple
HHV	19 810	20 207
%C	48,73	49,5
%H	6,87	6,62
%O	43,9	43,7
%Ash	0,5	0,2
HHV (Btu/lb)	8519	8690
LHV (Btu/lb)	7451	7600

Adjunct to ASTM E XXXX Wood Heater Cordwood Test Method - May 10, 2017 Version

Cordwood Fuel Load Calculators - 10 lb/ft^3 Nominal Load Density

Core 45-65% of Total Load Weight, Remainder 35-55% of Total Load Weight

Values to be input manually

For All Usable Firebox Volumes - High Fire Test Only

Nominal Required Load Density (wet basis)	10	lb/ft^3				
Usable Firebox Volume	1,51	ft^3				
Total Nom. Load Wt. Target	15,10	lb				
Total Load Wt. Allowable Range	14,30	to	15,90	lb		
Core Target Wt. Allowable Range	6,80	to	9,80	lb		
Remainder Load Wt. Allowable Range	5,30	to	8,30	lb		
						Mid-Point
Core Load Pc. Wt. Allowable Range	2,30	to	3,80	lb		3,05
Remainder Load Pc. Wt. Allowable Range	1,50	to	8,30	lb		4,90
	Pc. #					
Core Load Piece Wt. Actual	1	3,10	lb	In Range		
	2	3,02	lb	In Range		
	3	3,08	lb	In Range		
Core Load Total. Wt. Actual		9,20	lb	In Range		
	Pc. #					
Remainder Load Piece Wt.	1	5,91	lb	In Range		
(1 to 3 Pcs.)	2		lb	NA		
	3		lb	NA		
Remainder Load Tot. Wt. Act		5,91	lb	In Range		
Total Load Wt. Actual		15,11	lb	In Range		
Core % of Total Wt.		61%		In Range		45-65%
Remainder % of Total Wt.		39%		In Range		35-55%
Actual Load % of Nominal Target		100%		In Range		95-105%
Actual Fuel Load Density		10,0	lb/ft^3			
Kindling and Start-up Fuel						
Maximim Kindling Wt. (20% of Tot. Load Wt.)		3,02	lb			
Actual Kindling Wt.		2,80	lb	In Range		18,5%
Maximum Start-up Fuel Wt. (30% of Tot. Load Wt.)		4,53	lb			
Actual Start-up Fuel Wt.		4,35	lb	In Range		28,8%
Allowable Residual Start-up Fuel Wt. Range	1,5	to	3,0	lb		Mid-Point
Actual Residual Start-up Fuel Wt.		2,5	lb	In Range		2,3
Total Wt. All Fuel Added (wet basis)		22,26	lb			
High Fire Test Run End Point Range	Low		High			Mid-Point
Based on Fuel Load Wt. (w/tares)	1,4	to	1,7	lb		1,5
Actual Fuel Load Ending Wt.		na	lb	Out of Range		

Load pieces Length in. 16 in.

Fuel Piece Moisture Reading (%-dry basis)

1	2	3	Ave.		Pc. Wt. Dry Basis			
19,7	19	19,6	19,4	In Range	2,59	lb	1,18	kg
19,1	19,6	19,8	19,5	In Range	2,52	lb	1,14	kg
21,7	24,8	21	22,5	In Range	2,52	lb	1,14	kg
23,7	20,8	20,8	21,8	In Range	4,85	lb	2,20	kg
			NA	NA	NA	lb	NA	kg
			NA	NA	NA	lb	NA	kg

Total Load Ave. MC (%-dry basis)	21,0	In Range	
Total Load Ave. MC % (wet basis)	17,3		
Total Test Load Weight (dry basis)			12,49 lb 5,66 kg

Kindling Moisture (%-dry basis)

9,1	9	9,2	9,1	In Range	2,57 lb	1,16 kg

Start-up Fuel Moisture Readings (%-dry basis)

19,3	19,5	19,3	19,4	In Range	3,64 lb	1,65 kg

Total Wt. All Fuel Added (dry basis)	18,70 lb	8,48 kg
Total Wt. All Fuel Burned (dry basis)	######## lb	######## kg

Load high fire

Adjunct to ASTM E XXXX Wood Heater Cordwood Test Method - May 10, 2017 Version

Cordwood Fuel Load Calculators - 12 lb/ft^3 Nominal Load Density

Core 45-65% of Total Load Weight, Remainder 35-55% of Total Load Weight

Values to be input manually

THIS DOCUMENT IS NOT AN ASTM STANDARD; IT IS UNDER CONSIDERATION WITHIN AN ASTM TECHNICAL COMMITTEE BUT HAS NOT RECEIVED ALL APPROVALS REQUIRED TO BECOME AN ASTM STANDARD. IT SHALL NOT BE REPRODUCED OR CIRCULATED OR QUOTED, IN WHOLE OR IN PART, OUTSIDE OF ASTM COMMITTEE ACTIVITIES EXCEPT WITH THE APPROVAL OF THE CHAIRMAN OF THE COMMITTEE HAVING JURISDICTION AND THE PRESIDENT OF THE SOCIETY. *COPYRIGHT ASTM, 100 BARR HARBOR DRIVE, WEST CONSHOHOCKEN, PA 19428. ALL RIGHTS RESERVED.*

For Usable Firebox Volumes up to 3.0 ft^3 - Low and Medium Fire

Nominal Required Load Density (wet basis)	12	lb/ft^3				
Usable Firebox Volume	1,51	ft^3				
Total Nom. Load Wt. Target	18,12	lb				
Total Load Wt. Allowable Range	17,21	to	19,03	lb		
Core Target Wt. Allowable Range	8,154	to	11,78	lb		
Remainder Load Wt. Allowable Range	6,34	to	9,97	lb		
						Mid-Point
Core Load Fuel Pc. Wt. Allowable Range	2,72	to	4,53	lb		3,62
Remainder Load Pc. Wt. Allowable Range	1,81	to	5,44	lb		3,62
	Pc. #					
Core Load Piece Wt. Actual	1	3,01	lb		In Range	
	2	3,53	lb		In Range	
	3	3,61	lb		In Range	
Core Load Total. Wt. Actual		10,14	lb		In Range	
	Pc. #					
Remainder Load Piece Wt.	1	5,23	lb		In Range	
(2 or 3 Pcs.)	2	2,80	lb		In Range	
	3		lb		NA	
Remainder Load Piece Weight Ratio - Small/Large		54%			In Range	≤ 67%
Remainder Load Tot. Wt. Act		8,03	lb		In Range	
Total Load Wt. Actual		18,17	lb		In Range	
Core % of Total Wt.		56%			In Range	45-65%
Remainder % of Total Wt.		44%			In Range	35-55%
Actual Load % of Nominal Target		100%			In Range	95-105%
Actual Fuel Load Density		12,0	lb/ft^3			
Allowable Charcoal Bed Wt. Range (lb)	1,9	to	3,6			Mid-Point
Actual Charcoal Bed Wt.		2,0	lb		In Range	2,7
Actual Fuel Load Ending Wt.		0,0	lb		Valid Test	≥ 90%
Total Wt. of Fuel Burned During Test Run lb.		18,2	lb			
Load pieces Length in.		16	in.			

Fuel Piece Moisture Reading (%-dry basis)

1	2	3	Ave.		Pc. Wt. Dry Basis			
24,2	22,2	24,9	23,8	In Range	2,43	lb	1,10	kg
19,1	20,9	20,9	20,3	In Range	2,93	lb	1,33	kg
20,4	22,9	22,2	21,8	In Range	2,96	lb	1,34	kg
21,6	20,4	19,3	20,4	In Range	4,34	lb	1,97	kg
19	19,9	20	19,6	In Range	2,34	lb	1,06	kg
			NA	NA	NA	lb	NA	kg
Total Load Ave. MC % (dry basis)			21,1	In Range				
Total Load Ave. MC % (wet basis)			17,4					
Total Test Load Weight (dry basis)					15,00	lb	6,81	kg
Total Fuel Weight Burned During Test Run (dry basis)					15,0	lb	6,81	kg

For Usable Firebox Volumes above 3.0 ft^3 - Low and Medium Fire

Nominal Required Load Density (wet basis)	12	lb/ft^3				
Usable Firebox Volume		ft^3				
Total Nom. Load Wt. Target	0	lb				
Total Load Wt. Allowable Range	0,00	to	0,00	lb		
Core Target Wt. Allowable Range	0,00	to	0,00	lb		
Remainder Load Wt. Allowable Range	0,00	to	0,00	lb		
						Mid-Point
Core Load Fuel Pc. Wt. Allowable Range	0,00	to	0,00	lb		0,00
Remainder Load Pc. Wt. Allowable Range	0,00	to	0,00	lb		0,00
	Pc. #					
Core Load Piece Wt. Actual	1		lb		In Range	
	2		lb		In Range	
	3		lb		In Range	
Core Load Total. Wt. Actual		0,00	lb		In Range	
	Pc. #					
Remainder Load Piece Wt.	1		lb		In Range	
(3 or 4 Pcs.)	2		lb		In Range	
	3		lb		In Range	
	4		lb		NA	
Remainder Load Piece Weight Ratio - Small/Large		#NOMBRE!			#NOMBRE!	≤ 67%
Remainder Load Tot. Wt. Act		0,00	lb		In Range	
Total Load Wt. Actual		0,00	lb		In Range	
Core % of Total Wt.		#DIV/0!			#DIV/0!	45-65%
Remainder % of Total Wt.		#DIV/0!			#DIV/0!	35-55%
Actual Load % of Nominal Target		#DIV/0!			#DIV/0!	95-105%
Actual Fuel Load Density		#DIV/0!	lb/ft^3			
Allowable Charcoal Bed Wt. Range (lb)	0,1	to	-0,1			Mid-Point
Actual Charcoal Bed Wt.			lb		Out of Range	0,0
Actual Fuel Load Ending Wt.			lb		Valid Test	≥ 90%
Total Wt. of Fuel Burned During Test Run lb.		0,0	lb			

Fuel Piece Moisture Reading (%-dry basis)

1	2	3	Ave.		Pc. Wt. Dry Basis			
			#DIV/0!	#DIV/0!	#DIV/0!	lb	#DIV/0!	kg
			#DIV/0!	#DIV/0!	#DIV/0!	lb	#DIV/0!	kg
			#DIV/0!	#DIV/0!	#DIV/0!	lb	#DIV/0!	kg
			#DIV/0!	#DIV/0!	#DIV/0!	lb	#DIV/0!	kg
			#DIV/0!	#DIV/0!	#DIV/0!	lb	#DIV/0!	kg
			#DIV/0!	#DIV/0!	#DIV/0!	lb	#DIV/0!	kg
			NA	NA	NA	lb	NA	kg
Total Load Ave. MC % (dry basis)			#DIV/0!	#DIV/0!				
Total Load Ave. MC % (wet basis)			#DIV/0!					
Total Test Load Weight (dry basis)					#DIV/0!	lb	#DIV/0!	kg
Total Fuel Weight Burned During Test Run (dry basis)					#DIV/0!	lb	#DIV/0!	kg

	Start	End
Barometer (kPa):	101,1	101,1
Barometer (in.Hg):	29,854819	29,85481876
Dry Bulb (F):	77,81	85,4
Humidity (%):	52,4	37,7
Air velocity (ft/min)	3	5

High fire test						
DGM #1	Final:	0,000	cuft	Final:		Liter
	Initial:	0,000	cuft	Initial:		Liter
DGM #2	Final:	0,000	cuft	Final:		Liter
	Initial:	0,000	cuft	Initial:		Liter
DGM room				Final:		cuft
				Initial:		cuft

min or med burnrate						
DGM #1	Final:	24159,087	cuft	Final:	684109,140	Liter
	Initial:	24117,962	cuft	Initial:	682944,620	Liter
DGM #2	Final:	22483,761	cuft	Final:	636669,210	Liter
	Initial:	22441,308	cuft	Initial:	635467,050	Liter
DGM room				Final:	748,450	cuft
				Initial:	728,450	cuft

Numéro de la ligne dans "Raw data" à partir duquel les données du test commence	
Numéro de la ligne dans "Raw data" à partir duquel les données du highfire test commence	
Numéro de la ligne dans "Raw data" à partir duquel les données du min ou medium fire test commence	209

Autres données à rentrer: dans preload data, load data, traverse et filter set weight

Project nu.	PI 20165
Date	29-05-2018
Technicien	mm

Tunnel Traverse Worksheet (for velocity calculations)

Static Pressure: 0,14 in. H20
Barometer: 29,855 in. Hg

Pour un tunnel de 12" et plus, prendre 6 lectures

	TUNNEL VELOCITY	TUNNEL TEMP	SQUARE ROOT
	In. wc	°F	
A center			0,0000
B center			0,0000
A1			0,0000
A2			0,0000
A3			0,0000
A4			0,0000
A5			0,0000
A6			0,0000
B1			0,0000
B2			0,0000
B3			0,0000
B4			0,0000
B5			0,0000
B6			0,0000
AVERAGE	#DIV/0!	#DIV/0!	0,0000

PITOT CONSTANT=
0,954

Pour un tunnel moins de 12", prendre 4 lectures

	TUNNEL VELOCITY	TUNNEL TEMP	SQUARE ROOT
	In. wc	°F	
A center	0,059	77,02	0,2429
B center	0,059	76,95	0,2429
A1	0,049	77,01	0,2214
A2	0,052	77,01	0,2280
A3	0,059	76,98	0,2429
A4	0,050	76,97	0,2236
B1	0,049	76,960	0,2214
B2	0,058	76,820	0,2408
B3	0,054	76,840	0,2324
B4	0,049	76,810	0,2214
AVERAGE	0,0538	76,9370	0,2318

Project nu.	PI 20165
Date	29-05-2018
Technicien	mm

Filter set weight Low/ medium fire

	System 1 (g) 1st hour				System 1 (g)				System 2 (g)				Ambient blank (g)	Date	Heure
	probe	front	back	gasket	probe	front	back	gasket	probe	front	back	gasket	Filter		
Number	30	808	809	16	34	810	811	20	50	812	813	42	814		
Before (1)															
Before (2)															
Before (3)															
Before (4)															
Before (5)	110,2290	0,0853	0,0849	35,6368	110,1024	0,0859	0,0846	35,4748	107,6463	0,0856	0,0845	35,4933	0,0850	2018-05-28	19:00
Before (6)	110,2291	0,0853	0,0849	35,6367	110,1025	0,0859	0,0846	35,4746	107,6464	0,0856	0,0845	35,4933	0,0850	2018-05-29	09:30
After (1)	110,2292	0,0879	0,0845	35,6402	110,1026	0,0863	0,0840	35,4769	107,6465	0,0889	0,0838	35,4969	0,0851	2018-05-29	16:00
After (2)	110,2292	0,0872	0,0841	35,6400	110,1026	0,0859	0,0839	35,4760	107,6465	0,0886	0,0838	35,4958	0,0851	2018-06-06	08:00
After (3)	110,2292	0,0871	0,0841	35,6400	110,1026	0,0858	0,0839	35,4760	107,6465	0,0885	0,0837	35,4958	0,0851	2018-06-13	08:00
After (4)															
After (5)															
After (6)	110,2292	0,0871	0,0841	35,6400	110,1026	0,0858	0,0839	35,4760	107,6465	0,0885	0,0837	35,4958	0,0851	2018-06-13	08:00
Difference	0,0001	0,0018	-0,0008	0,0033	0,0001	-0,0001	-0,0007	0,0014	0,0001	0,0029	-0,0008	0,0025	0,0001		
Total (mg)		4,4				5,1				4,7			0,1		
Total ajusté (mg)		**4,30**				**5,00**				**4,60**					

Project nu.	PI 20165
Date	29-05-2018
Technicien	mm

SFBA EPA EMISSION RESULTS

Test Duration: **239** min

PRESSURE FACTOR:	DGM 1	0,98030	
	DGM 2	0,97507	
	DGM 3	0,99782	
TEMPERATURE FACTORS	DGM 1	0,96753	
	DGM 2	0,96635	
	DGM 3	0,97529	
VOLUMES SAMPLED	DGM 1	38,556	SCft
	DGM 2	39,658	Scft
	DGM 3	19,381	SCft

TOTAL TUNNEL VOLUME : 66147

SAMPLE RATIOS

Sample Train 1:	1715,619
Sample Train 2:	1667,921

Paticulate concentration

Sample Train 1	**0,000132**	g/dscf
Sample Train 2	**0,000119**	g/dscf
Room	**0,000005**	g/dscf

TOTAL EMISSIONS

Sample Train 1	**8,41**	g
Sample Train 2	**7,50**	g

EMISSION RATES

Sample Train 1	**2,11**	g/hr
Sample Train 2	**1,88**	g/hr

1st hour emission rate **7,55** g/hr

	Train 1	Train 2
Cs	0,0001323	0,00011851

RESULTS

Average emission rate: 2,00 g/hr

Burn Rate : 1,709 Dry kg/hr

BAROMETRIC PRESSURE

Average:	29,85481876	in Hg
Start:	29,85481876	in Hg
End:	29,85481876	in Hg

DGM CONTROLLER VALUES

DGM 1	Final:	24159,087	Cuft
	Initial:	24117,962	Cuft
DGM 2	Final:	22483,761	Cuft
	Initial:	22441,308	Cuft
DGM #3	Final:	748,450	Cuft
	Initial:	728,450	Cuft

TEMPERATURES

DGM 1	545,718	°R
DGM 2	546,384	°R

CALIBRATION FACTORS

DGM 1	0,9885
DGM 2	0,9914
DGM #3	0,9958

TUNNEL FLOW RATE: 276,766 Dscfm

PARTICULATE CATCH

Total Sample Train 1:	5,10	mg
Total Sample Train 2:	4,70	mg
Total Sample Train 1 1st hour:	4,40	mg

DEVIATION: 5,72%

Elapsed		Weight			Flue	Room	Tunnel	Unit	Unit	Unit	Unit	Unit
Time	Raw data row	Remaining	CO	CO_2	Gas	Temp	Dry Bulb	Top	Back	R.Side	L.Side	Bottom
min		lbs	%	%	°F	°F	°F	°F	°F	°F	°F	°F
0,00	209,00	18,2	0,4	4,9	437,3	79,8	147,1	534,4	419,8	480,1	509,5	510,2
1,0	210,0	18,1	0,1	2,6	339,4	79,9	130,5	503,9	423,4	482,1	504,1	513,4
2,0	211,0	17,8	0,7	3,7	458,2	79,7	126,5	502,4	424,5	480,5	494,3	515,7
3,0	212,0	17,6	0,3	6,0	548,0	79,8	131,4	527,0	424,2	478,9	485,6	517,0
4,0	213,0	17,3	0,2	8,9	637,5	80,0	141,8	569,3	422,2	475,7	477,0	517,4
5,0	214,0	17,0	0,1	10,6	704,9	79,9	151,4	621,6	419,9	472,6	469,5	517,7
6,0	215,0	16,7	0,1	12,7	768,5	80,3	160,3	678,5	416,9	469,0	463,2	516,9
7,0	216,0	16,4	0,1	14,7	827,4	80,3	169,8	739,1	413,9	467,0	458,8	516,2
8,0	217,0	16,0	0,2	15,8	851,9	80,2	175,8	791,5	411,0	465,3	456,5	515,5
9,0	218,0	15,6	0,1	16,0	901,0	80,5	182,8	837,0	408,1	463,6	454,3	514,7
10,0	219,0	15,2	0,1	17,4	924,7	80,7	184,1	875,3	405,6	463,0	453,4	513,8
11,0	220,0	14,9	0,1	17,8	910,8	80,9	179,0	905,3	403,2	462,1	452,4	512,9
12,0	221,0	14,5	0,1	17,6	916,8	80,9	179,0	929,1	400,8	459,5	451,6	511,6
13,0	222,0	14,2	0,3	18,0	908,3	80,9	176,1	950,0	398,8	461,9	451,7	510,3
14,0	223,0	13,9	0,3	17,0	856,8	81,3	167,3	958,0	396,6	460,9	451,5	509,5
15,0	224,0	13,5	0,4	16,4	824,8	81,4	160,8	960,6	394,7	461,6	452,7	508,5
16,0	225,0	13,3	0,4	16,1	797,1	81,2	157,4	961,0	393,2	461,8	453,1	508,3
17,0	226,0	13,0	0,5	16,0	790,8	81,5	154,5	959,1	391,5	460,2	453,8	508,0
18,0	227,0	12,7	0,6	16,0	784,6	81,4	154,2	957,2	389,9	462,2	455,3	507,1
19,0	228,0	12,5	0,7	15,8	779,4	81,8	153,4	953,1	388,5	460,9	456,4	507,5
20,0	229,0	12,2	0,8	15,7	766,5	81,5	149,8	867,8	336,7	454,7	460,1	505,6
21,0	230,0	12,0	0,9	15,5	751,0	81,5	146,5	832,6	310,0	452,7	460,3	503,9
22,0	231,0	11,7	0,9	15,4	738,0	81,4	146,6	805,8	291,6	451,3	460,9	502,8
23,0	232,0	11,5	0,9	15,2	726,7	81,6	146,6	780,6	277,8	451,0	461,6	502,8
24,0	233,0	11,1	0,9	15,1	717,3	81,9	145,2	762,7	267,5	449,2	461,0	501,4
25,0	234,0	11,0	0,8	15,2	710,5	81,9	143,6	748,8	259,2	448,2	460,7	500,8
26,0	235,0	10,7	0,8	15,1	705,5	82,0	141,9	738,6	252,9	447,5	460,9	500,4
27,0	236,0	10,5	0,8	15,0	698,7	81,7	143,2	731,0	247,1	446,8	461,7	500,3
28,0	237,0	10,2	0,8	15,0	694,6	81,9	142,6	722,3	241,9	447,2	462,3	500,7
29,0	238,0	10,0	0,8	14,9	688,9	81,8	142,0	715,3	237,8	446,5	462,9	500,7
30,0	239,0	9,8	0,8	14,7	682,0	81,6	141,4	710,5	234,1	446,4	463,3	499,7
31,0	240,0	9,6	0,8	14,4	670,7	81,7	140,3	702,5	231,1	445,7	464,1	499,8
32,0	241,0	9,3	0,8	14,2	661,5	81,9	139,6	694,3	228,8	445,9	465,4	499,3
33,0	242,0	9,1	0,7	14,3	657,0	82,2	139,3	689,2	226,8	445,8	466,2	499,1
34,0	243,0	8,9	0,7	14,4	653,6	81,9	137,4	683,3	225,5	444,9	467,1	499,2
35,0	244,0	8,7	0,8	14,5	652,7	82,2	136,3	682,2	223,7	445,2	468,2	498,8
36,0	245,0	8,5	0,8	14,4	647,4	81,7	137,1	682,0	222,5	446,3	470,2	499,8
37,0	246,0	8,2	0,9	13,9	642,5	82,3	136,4	678,6	221,4	446,2	472,1	499,3
38,0	247,0	8,1	0,8	13,3	635,5	81,9	134,9	672,3	221,1	445,9	473,7	499,0
39,0	248,0	7,8	0,3	12,8	627,6	82,3	135,1	660,1	219,8	446,5	475,0	499,1
40,0	249,0	7,7	0,1	11,4	613,0	82,2	132,4	640,7	218,2	447,8	477,3	500,1
41,0	250,0	7,5	0,0	10,7	597,3	82,5	130,9	618,4	217,0	447,5	478,8	499,5
42,0	251,0	7,4	0,0	11,3	595,4	82,5	130,4	605,9	215,5	449,4	480,3	499,5
43,0	252,0	7,3	0,0	10,8	588,6	82,0	129,0	591,3	214,2	450,0	481,4	498,6
44,0	253,0	7,2	0,0	10,5	579,4	82,0	128,7	573,9	213,0	450,1	482,1	498,5
45,0	254,0	7,0	0,0	10,1	574,5	82,0	127,8	561,0	211,7	450,4	482,6	497,3
46,0	255,0	6,9	0,0	9,6	565,8	81,8	126,5	549,2	210,7	450,6	484,0	497,2
47,0	256,0	6,8	0,0	9,1	551,6	82,1	125,3	534,8	209,6	450,4	483,9	496,4
48,0	257,0	6,7	0,0	8,7	540,0	82,3	124,3	520,8	208,5	450,4	484,3	495,4
49,0	258,0	6,6	0,1	8,4	527,7	81,9	122,5	506,1	207,6	450,2	485,0	494,5
50,0	259,0	6,5	0,1	7,9	515,2	82,1	121,2	492,9	207,0	447,9	484,4	492,4
51,0	260,0	6,5	0,1	7,6	505,0	81,6	120,9	478,6	206,4	447,3	483,4	491,7
52,0	261,0	6,4	0,2	7,4	494,4	81,8	119,3	464,7	205,6	446,6	481,3	490,2
53,0	262,0	6,3	0,2	7,1	483,3	82,3	118,5	450,6	205,2	445,3	479,4	489,0
54,0	263,0	6,3	0,4	6,9	472,7	82,2	117,2	438,2	204,3	441,8	476,6	487,4
55,0	264,0	6,2	0,4	6,9	467,3	82,1	116,7	427,3	203,5	441,0	473,6	485,9
56,0	265,0	6,1	0,3	7,0	464,1	81,9	116,1	419,4	202,8	438,5	469,8	484,1
57,0	266,0	6,0	0,2	7,2	465,8	81,6	115,8	415,5	202,0	437,0	467,0	483,1
58,0	267,0	6,0	0,2	7,4	466,4	81,9	115,5	413,8	201,3	434,4	463,3	481,8
59,0	268,0	5,9	0,2	7,5	466,5	81,5	115,7	411,4	200,6	432,2	460,5	480,7
60,0	269,0	5,9	0,2	7,7	470,1	81,7	115,8	414,2	199,9	429,9	457,1	480,2
61,0	270,0	5,8	0,2	7,9	466,5	81,6	115,0	409,0	200,0	429,0	455,0	480,1
62,0	271,0	5,6	0,2	7,8	463,3	81,4	115,5	403,8	200,0	427,0	453,5	478,9
63,0	272,0	5,6	0,3	7,8	466,9	81,5	115,2	405,1	199,8	424,7	451,6	478,1
64,0	273,0	5,5	0,3	8,0	466,2	81,6	113,8	401,4	200,1	423,5	450,1	478,4
65,0	274,0	5,4	0,3	8,0	463,1	81,8	113,9	398,0	200,1	420,8	449,5	477,8
66,0	275,0	5,3	0,3	8,1	461,0	81,4	114,5	396,1	200,3	418,5	448,7	477,4
67,0	276,0	5,2	0,3	8,2	459,7	81,4	113,9	394,3	200,3	417,3	448,7	476,7
68,0	277,0	5,2	0,2	8,0	459,6	81,4	113,8	394,9	200,4	416,3	448,6	476,2
69,0	278,0	5,1	0,2	7,7	457,2	81,5	113,8	395,3	200,6	414,5	449,5	475,7
70,0	279,0	5,0	0,2	7,7	454,6	81,4	113,9	393,2	200,8	413,4	449,8	475,3
71,0	280,0	5,0	0,2	7,7	450,6	81,2	112,2	391,3	200,9	411,8	449,9	475,4
72,0	281,0	4,9	0,3	7,6	448,3	81,4	112,5	388,7	201,0	410,1	450,4	475,9
73,0	282,0	4,8	0,4	7,6	446,0	81,6	112,1	387,0	201,0	409,1	450,6	476,1
74,0	283,0	4,7	0,4	7,6	444,2	81,6	112,2	384,5	201,1	407,1	451,5	476,2
75,0	284,0	4,6	0,4	7,6	443,9	81,6	112,3	382,0	201,1	406,5	450,8	476,4
76,0	285,0	4,6	0,5	7,6	442,4	81,7	112,3	378,5	201,1	404,3	451,4	476,7
77,0	286,0	4,5	0,5	7,6	440,7	81,8	111,9	376,9	200,9	403,1	452,1	476,7
78,0	287,0	4,5	0,5	7,6	439,7	81,8	111,7	374,9	200,8	401,4	452,8	476,9
79,0	288,0	4,4	0,5	7,6	441,6	81,7	111,5	374,5	200,6	400,3	453,1	477,1
80,0	289,0	4,3	0,5	7,7	443,1	81,3	111,7	376,0	200,6	399,1	453,4	477,2
81,0	290,0	4,2	0,4	7,9	448,4	81,5	112,2	379,6	200,4	398,1	453,5	477,0
82,0	291,0	4,1	0,5	7,8	447,7	81,3	111,9	379,1	200,3	397,5	454,4	477,3
83,0	292,0	4,0	0,4	7,7	445,8	81,4	111,8	377,9	200,4	396,0	456,0	476,8
84,0	293,0	4,0	0,4	7,8	446,5	81,5	111,9	375,6	200,5	396,2	458,2	477,4
85,0	294,0	3,9	0,4	7,6	442,0	81,4	111,4	373,4	200,4	395,2	458,2	477,3
86,0	295,0	3,8	0,4	7,5	437,9	81,6	111,1	369,9	200,5	393,3	458,5	477,3
87,0	296,0	3,7	0,3	7,3	436,4	81,6	111,0	367,4	200,4	392,9	459,1	477,4
88,0	297,0	3,7	0,3	7,2	433,8	81,8	110,8	365,9	200,5	391,7	458,9	477,0
89,0	298,0	3,6	0,3	7,0	429,9	81,6	110,1	362,5	200,4	391,1	458,2	477,2
90,0	299,0	3,6	0,3	6,8	424,7	81,5	109,6	357,4	200,2	390,3	457,5	477,0
91,0	300,0	3,5	0,3	6,3	421,8	81,5	109,5	354,3	199,7	389,8	456,7	477,0
92,0	301,0	3,4	0,2	6,6	420,9	81,6	109,5	352,2	199,1	387,7	455,5	476,6
93,0	302,0	3,4	0,3	6,7	419,1	81,7	109,6	349,5	198,1	387,3	454,7	476,0
94,0	303,0	3,3	0,3	6,7	418,9	81,7	109,4	347,8	197,5	386,8	453,0	475,4
95,0	304,0	3,3	0,2	6,6	419,6	81,5	109,4	346,9	196,9	386,0	451,2	475,0
96,0	305,0	3,2	0,3	6,4	416,4	81,5	108,7	344,6	196,4	385,4	449,3	473,9
97,0	306,0	3,2	0,4	6,4	409,9	81,7	108,6	340,0	195,8	384,8	447,6	473,3
98,0	307,0	3,1	0,4	6,3	404,6	81,4	108,1	335,1	195,1	384,6	446,5	472,0

99,0	308,0	3,1	0,4	6,3	400,8	81,5	107,8	330,4	194,5	384,3	445,7	471,3
100,0	309,0	3,0	0,5	6,3	397,5	81,2	107,2	326,4	194,1	383,8	444,4	470,2
101,0	310,0	3,0	0,5	6,2	394,2	81,4	107,3	322,5	193,8	383,2	443,2	469,4
102,0	311,0	2,9	0,4	6,2	392,7	81,3	105,9	318,8	193,5	383,4	442,1	468,3
103,0	312,0	2,9	0,4	6,2	387,7	81,3	105,9	315,4	193,2	383,1	441,4	467,4
104,0	313,0	2,8	0,5	6,2	383,3	81,1	106,0	311,1	193,1	382,9	440,6	466,4
105,0	314,0	2,8	0,5	6,2	381,7	81,3	106,0	308,3	192,9	381,9	440,1	465,0
106,0	315,0	2,7	0,5	6,3	382,2	81,2	105,7	306,7	192,7	381,2	439,3	464,2
107,0	316,0	2,7	0,4	6,2	378,7	81,0	105,6	302,8	192,6	381,7	439,4	463,5
108,0	317,0	2,6	0,3	5,7	375,7	81,3	105,6	298,8	192,6	381,1	439,3	462,7
109,0	318,0	2,6	0,3	5,7	375,1	81,1	105,7	295,9	192,7	380,3	440,2	461,6
110,0	319,0	2,5	0,3	5,8	374,3	81,3	104,8	294,3	192,6	380,5	440,8	460,6
111,0	320,0	2,4	0,3	5,9	374,5	81,2	104,7	292,2	192,6	380,0	442,1	459,8
112,0	321,0	2,4	0,3	5,9	374,3	81,3	105,1	291,0	192,6	379,5	442,5	458,6
113,0	322,0	2,3	0,3	5,9	373,8	81,3	105,3	289,6	192,6	379,5	442,4	457,6
114,0	323,0	2,3	0,3	5,9	374,5	81,3	104,9	288,9	192,6	379,8	442,2	456,5
115,0	324,0	2,2	0,3	5,8	371,5	81,3	104,8	287,8	192,8	379,1	442,1	455,1
116,0	325,0	2,2	0,3	5,8	369,4	81,4	105,0	286,5	192,9	378,5	441,1	453,4
117,0	326,0	2,2	0,3	5,9	369,8	81,3	104,7	285,6	193,3	378,8	441,2	452,7
118,0	327,0	2,1	0,3	5,8	367,7	81,3	104,7	283,8	193,5	377,7	440,0	451,3
119,0	328,0	2,1	0,3	5,8	366,3	81,5	104,5	282,7	193,7	377,6	438,9	449,8
120,0	329,0	2,0	0,3	5,9	365,5	81,7	104,0	281,3	194,2	378,5	437,3	449,2
121,0	330,0	2,0	0,3	5,8	365,7	81,3	104,1	281,5	194,3	377,0	434,8	447,5
122,0	331,0	1,9	0,3	5,8	364,8	81,6	104,1	281,1	194,7	377,5	432,6	446,7
123,0	332,0	1,9	0,4	5,8	364,0	81,5	103,9	281,4	195,3	377,7	430,5	445,7
124,0	333,0	1,8	0,4	5,6	361,5	81,4	103,7	280,6	195,8	376,9	427,5	444,5
125,0	334,0	1,8	0,4	5,4	358,3	81,2	102,9	278,5	196,3	376,0	424,4	443,4
126,0	335,0	1,7	0,4	5,1	353,6	81,4	102,4	276,0	197,1	376,4	421,6	442,6
127,0	336,0	1,7	0,5	4,9	348,2	81,3	102,5	272,8	197,2	376,0	418,4	442,2
128,0	337,0	1,7	0,5	4,7	343,1	81,3	102,5	269,2	197,2	375,2	415,2	441,8
129,0	338,0	1,6	0,5	4,6	336,5	81,4	102,3	265,9	197,3	375,1	412,1	440,5
130,0	339,0	1,6	0,6	4,5	330,6	81,6	101,4	262,0	197,5	373,8	408,4	439,1
131,0	340,0	1,6	0,6	4,4	326,8	81,8	101,1	258,5	197,6	373,2	404,7	438,9
132,0	341,0	1,6	0,5	4,4	323,7	81,7	100,9	254,8	197,7	373,1	401,7	437,0
133,0	342,0	1,6	0,5	4,4	320,6	81,7	100,7	251,9	198,2	371,6	398,2	436,1
134,0	343,0	1,5	0,6	4,4	317,2	81,8	100,9	249,0	198,3	370,9	395,1	435,2
135,0	344,0	1,5	0,5	4,1	312,6	81,5	99,5	246,4	198,7	369,7	391,6	434,3
136,0	345,0	1,5	0,5	4,1	309,2	81,6	99,6	243,5	199,1	368,6	388,1	433,8
137,0	346,0	1,5	0,5	4,0	306,6	81,7	99,6	240,5	199,6	367,0	385,2	432,5
138,0	347,0	1,4	0,5	4,1	303,9	81,8	99,0	238,0	200,0	366,0	382,0	431,8
139,0	348,0	1,4	0,5	4,0	301,1	81,8	99,2	234,8	200,5	366,7	379,2	431,4
140,0	349,0	1,4	0,5	4,0	298,8	81,8	99,3	232,5	200,9	365,0	376,5	429,9
141,0	350,0	1,4	0,5	4,0	296,3	81,7	99,0	230,6	201,2	362,9	373,6	427,8
142,0	351,0	1,4	0,5	4,0	294,1	81,5	98,9	228,1	201,4	361,8	371,0	426,7
143,0	352,0	1,4	0,5	4,0	291,8	81,7	98,5	226,3	201,8	360,2	368,7	423,9
144,0	353,0	1,3	0,5	4,0	289,9	81,7	98,5	224,2	202,1	358,8	366,2	422,3
145,0	354,0	1,3	0,5	3,9	287,8	81,8	98,4	222,0	202,5	357,4	363,8	422,0
146,0	355,0	1,3	0,5	3,9	286,1	81,9	98,2	220,5	202,7	356,6	361,9	420,4
147,0	356,0	1,3	0,5	3,9	284,6	81,8	98,0	218,7	203,0	355,3	359,5	420,0
148,0	357,0	1,2	0,5	3,9	283,1	81,8	98,0	217,5	203,4	355,1	357,6	418,7
149,0	358,0	1,3	0,5	3,8	281,4	81,7	97,9	215,7	203,8	353,0	355,4	417,1
150,0	359,0	1,2	0,5	3,8	279,6	81,7	97,7	214,4	204,2	351,4	352,9	415,2
151,0	360,0	1,2	0,5	3,8	278,1	81,7	97,4	212,8	204,7	349,5	351,2	413,3
152,0	361,0	1,2	0,5	3,8	277,0	81,7	97,4	211,9	205,3	348,6	349,4	411,8
153,0	362,0	1,1	0,5	3,8	275,4	81,6	97,2	210,3	205,6	347,2	347,4	410,3
154,0	363,0	1,1	0,5	3,8	274,1	81,4	97,2	209,5	206,2	346,1	345,6	408,7
155,0	364,0	1,1	0,5	3,7	272,8	81,4	97,1	208,5	206,6	345,5	343,8	407,7
156,0	365,0	1,1	0,5	3,7	271,3	81,6	97,0	207,2	207,2	344,2	341,8	405,9
157,0	366,0	1,1	0,5	3,7	270,8	81,7	96,9	206,0	207,9	342,9	339,9	404,5
158,0	367,0	1,0	0,5	3,7	269,3	81,7	96,7	205,1	208,5	340,8	338,3	402,8
159,0	368,0	1,1	0,5	3,8	269,0	81,6	96,7	204,0	209,4	340,1	336,2	402,2
160,0	369,0	1,0	0,5	3,8	268,8	81,6	96,6	203,2	210,0	338,9	334,5	400,3
161,0	370,0	1,0	0,5	3,7	267,7	81,6	96,4	202,5	211,0	337,7	333,1	399,2
162,0	371,0	1,0	0,5	3,7	266,8	81,8	96,0	201,6	211,9	338,5	331,6	398,3
163,0	372,0	1,0	0,5	3,7	265,9	81,8	96,0	200,7	212,8	337,8	330,2	397,7
164,0	373,0	0,9	0,5	3,7	265,2	81,7	95,8	200,3	213,6	335,2	328,9	395,5
165,0	374,0	0,9	0,5	3,7	264,7	81,8	96,0	199,6	214,2	333,8	327,2	394,1
166,0	375,0	0,9	0,5	3,7	264,0	81,8	95,6	198,8	214,9	332,7	325,8	392,1
167,0	376,0	0,9	0,5	3,7	262,7	81,8	95,4	198,2	215,5	331,6	324,3	391,2
168,0	377,0	0,9	0,5	3,7	261,7	81,7	95,6	197,7	216,4	330,1	322,4	390,4
169,0	378,0	0,8	0,5	3,7	261,0	81,7	95,6	196,8	216,7	329,3	321,7	388,7
170,0	379,0	0,8	0,5	3,7	260,2	81,7	95,7	196,4	217,2	328,3	320,8	386,5
171,0	380,0	0,8	0,5	3,7	259,3	81,9	95,6	195,6	217,2	326,9	319,7	384,7
172,0	381,0	0,8	0,5	3,7	258,5	81,8	95,2	195,2	217,7	325,5	318,7	382,9
173,0	382,0	0,8	0,5	3,7	258,3	81,7	95,5	194,5	217,9	326,0	317,0	382,3
174,0	383,0	0,7	0,5	3,7	257,5	81,5	95,2	193,9	218,1	324,2	315,4	382,0
175,0	384,0	0,8	0,5	3,7	257,0	81,6	95,5	193,1	218,4	323,9	314,9	379,8
176,0	385,0	0,8	0,6	3,7	256,5	81,5	95,3	193,1	218,5	323,1	313,8	379,2
177,0	386,0	0,7	0,6	3,6	258,1	81,4	95,2	192,6	218,5	322,8	312,1	378,7
178,0	387,0	0,7	0,6	3,7	260,2	81,4	95,5	193,1	218,7	322,0	311,0	378,1
179,0	388,0	0,7	0,5	3,7	261,5	81,2	95,4	193,8	218,6	321,0	309,7	377,3
180,0	389,0	0,7	0,5	3,7	261,2	81,3	95,3	194,3	218,5	319,9	309,3	376,2
181,0	390,0	0,7	0,5	3,7	260,3	81,2	95,4	194,3	218,4	319,6	308,5	375,0
182,0	391,0	0,6	0,5	3,7	258,8	81,2	95,1	193,9	218,3	318,6	307,7	374,4
183,0	392,0	0,6	0,6	3,5	257,3	81,2	94,9	193,4	217,7	318,2	307,4	373,2
184,0	393,0	0,6	0,5	3,5	255,8	81,2	95,0	192,8	217,1	317,7	306,7	372,4
185,0	394,0	0,6	0,5	3,5	255,1	80,9	94,8	192,0	216,4	317,1	306,7	371,5
186,0	395,0	0,6	0,5	3,5	254,5	81,0	95,0	191,6	215,8	316,1	305,6	371,1
187,0	396,0	0,6	0,5	3,6	254,0	80,9	94,8	191,2	215,0	314,5	304,8	370,6
188,0	397,0	0,5	0,5	3,5	253,1	80,9	94,8	190,4	213,9	314,8	304,1	370,3
189,0	398,0	0,5	0,5	3,5	253,0	80,9	94,7	190,0	212,9	313,9	303,4	369,9
190,0	399,0	0,5	0,6	3,5	252,8	80,9	94,6	190,2	211,8	312,7	302,8	369,1
191,0	400,0	0,5	0,6	3,6	252,8	80,9	94,7	189,6	211,1	312,1	302,7	369,3
192,0	401,0	0,5	0,6	3,6	253,0	80,9	94,5	189,1	210,1	311,5	301,4	369,1
193,0	402,0	0,4	0,6	3,5	251,6	80,7	94,5	189,6	209,4	310,0	300,8	369,3
194,0	403,0	0,4	0,5	3,5	250,7	80,8	94,4	189,2	208,2	310,3	301,7	367,9
195,0	404,0	0,4	0,5	3,5	249,8	80,8	94,4	189,0	207,2	309,2	300,8	367,7
196,0	405,0	0,4	0,5	3,5	249,5	80,6	94,4	188,7	206,4	307,4	300,4	368,0
197,0	406,0	0,4	0,5	3,5	248,5	80,9	94,4	188,3	205,3	307,2	300,2	366,4
198,0	407,0	0,4	0,5	3,4	248,1	81,0	94,2	187,7	204,3	306,6	298,9	366,7
199,0	408,0	0,3	0,5	3,4	247,3	81,0	94,1	186,9	203,4	305,8	299,2	366,1
200,0	409,0	0,4	0,5	3,3	245,6	81,0	93,8	186,6	202,8	304,7	297,6	366,4

201,0	410,0	0,3	0,5	3,3	244,3	81,1	93,6	186,2	202,2	303,7	296,8	367,3
202,0	411,0	0,3	0,5	3,2	243,1	80,9	93,7	185,5	201,3	302,9	296,0	366,8
203,0	412,0	0,3	0,5	3,2	241,3	81,1	93,9	184,7	200,5	302,1	296,0	366,0
204,0	413,0	0,3	0,5	3,1	240,3	80,8	93,6	184,0	199,7	301,3	294,9	366,0
205,0	414,0	0,3	0,5	3,1	239,4	81,0	93,7	182,8	199,0	300,4	294,2	365,5
206,0	415,0	0,3	0,5	3,1	238,2	80,9	93,7	182,1	198,5	299,0	292,7	365,2
207,0	416,0	0,3	0,5	3,1	237,3	80,8	93,5	181,3	197,7	298,0	292,5	364,3
208,0	417,0	0,2	0,5	3,1	236,8	80,9	93,5	180,3	197,0	297,4	291,9	362,8
209,0	418,0	0,2	0,5	3,1	235,5	80,9	93,4	179,8	196,4	296,7	291,6	362,0
210,0	419,0	0,2	0,5	3,0	234,6	80,7	93,3	179,0	195,8	295,5	290,0	361,2
211,0	420,0	0,2	0,5	3,0	233,7	80,7	93,2	178,3	195,5	294,5	288,4	360,8
212,0	421,0	0,2	0,5	3,0	232,7	80,6	92,9	177,5	195,0	293,1	288,4	359,1
213,0	422,0	0,2	0,5	3,0	231,9	80,8	92,8	176,8	194,7	293,2	287,1	358,7
214,0	423,0	0,2	0,5	3,0	231,0	80,7	92,7	175,9	194,2	291,0	285,6	358,2
215,0	424,0	0,2	0,5	3,0	230,2	80,7	92,6	175,1	193,6	289,8	284,9	357,2
216,0	425,0	0,1	0,5	3,0	229,4	80,5	92,7	174,7	193,8	289,0	284,1	356,5
217,0	426,0	0,1	0,5	2,9	228,5	80,6	92,9	174,4	193,4	287,6	282,2	356,1
218,0	427,0	0,1	0,5	2,9	227,7	80,6	92,8	173,5	192,9	286,9	281,6	354,9
219,0	428,0	0,1	0,5	2,9	226,6	80,4	92,7	172,9	192,5	285,8	280,2	353,8
220,0	429,0	0,1	0,5	2,9	226,1	80,5	92,6	172,2	192,2	285,0	279,6	352,2
221,0	430,0	0,1	0,5	2,9	225,3	80,8	92,5	171,7	192,0	283,6	279,0	351,8
222,0	431,0	0,1	0,5	2,9	224,6	80,6	92,5	171,1	191,5	282,9	277,9	350,0
223,0	432,0	0,1	0,5	2,9	223,7	80,7	92,4	170,5	191,5	281,6	276,8	349,3
224,0	433,0	0,1	0,5	2,9	222,9	80,6	92,4	170,2	191,2	281,0	275,9	348,3
225,0	434,0	0,1	0,5	2,9	222,2	80,6	92,4	169,7	191,5	279,8	275,4	347,3
226,0	435,0	0,1	0,5	2,9	222,0	80,7	92,2	169,2	191,3	277,8	274,3	346,3
227,0	436,0	0,1	0,5	2,9	221,1	80,7	92,4	168,6	191,1	277,7	273,3	344,8
228,0	437,0	0,1	0,5	2,8	220,7	80,9	92,4	168,3	191,0	275,9	272,7	344,3
229,0	438,0	0,1	0,5	2,9	219,8	81,4	92,4	167,4	190,8	275,4	272,6	343,9
230,0	439,0	0,1	0,5	2,9	219,4	81,2	92,5	167,3	190,7	274,9	271,8	342,1
231,0	440,0	0,1	0,5	2,9	218,8	81,2	92,2	166,6	190,7	273,5	271,4	340,7
232,0	441,0	0,1	0,5	2,9	218,3	81,4	92,2	166,4	190,6	272,4	270,8	340,0
233,0	442,0	0,1	0,5	2,8	217,9	81,4	92,1	165,7	190,5	271,7	270,1	338,9
234,0	443,0	0,1	0,5	2,8	217,0	81,4	92,0	165,5	190,7	271,0	269,5	338,0
235,0	444,0	0,1	0,5	2,8	216,4	81,4	92,0	165,1	190,6	271,0	268,7	337,4
236,0	445,0	0,1	0,5	2,8	216,0	81,2	91,9	164,7	190,6	270,0	268,4	336,2
237,0	446,0	0,1	0,5	2,8	215,3	81,3	91,7	164,3	190,6	268,2	267,7	335,0
238,0	447,0	0,1	0,5	2,8	215,2	81,2	91,5	164,5	190,4	267,1	267,2	334,5
239,0	448,0	0,0	0,5	2,8	214,7	81,5	91,8	163,9	190,6	266,8	266,6	334,1

Manufacturer: IHP
Model: IRON STRIKE

Run: 5
Project #: PI 20165
Test Duration: 239 min

	HHV	LHV
Eff	68,26%	73,45%
Comb Eff	96,64%	96,64%
HT Eff	70,63%	76,00%
Output	23 575	kJ/h
Burn Rate	1,71	kg/h
Grams CO	349	g
Input	34 535	kJ/h
MC wet	17,42	

Note: In the “Input data”, "Calc. % O_2", "Fuel Properties", and “Mass Balance” columns, [e], [d], [g], [a]. [b], [c], [h], [u], [w], [j], and [k] refer to their respective variables in Clauses 13.7.3

Ultimate CO_2
$CO_{2\text{-ult}}$ 19,86
F_0
1,049

Overall Heating Efficiency:	68,26%	Air Fuel Ratio (A/F)		
Combustion Efficiency:	96,64%	Dry Molecular Weight (M_d)	29,60	
Heat Transfer Efficiency:	70,63%	Dry Moles Exhaust Gas (N_r):	508,70	
		Air Fuel Ratio (A/F)	14,55	

Heat Output:	22 363	Btu/h	23 575	kJ/h
Heat Input:	32 760	Btu/h	34 535	kJ/h
Burn Duration:	3,98	h		
Burn Rate:	3,77	lb/h	1,709	kg/h
Stack Temp:	400,7	Deg. F	204,8	Deg. C

POLYTESTS
TESTING THROUGH YOUR REALITY

Date: 2018-05-29 Manufacturer: ~~TAP~~ MM IHP Model: Iron strike
Project #: PT 20165 Run: 5 Tech: MM Reviewer: DP

- start fire 1 minute torche
- close door immediatly
- Fan off
- At 25 LBS insert load
- close door immediatly
- At 15.6 LBS open Fan
At 38 LBS close Fan
At 2.00 LBS insert load
At 10 min close air intl 1/4
At 15 min close air intl 1/4" avant la fin de tape

At 20 min open Fan

TEST LOAD CONFIGURATION

POLYTESTS
TESTING THROUGH YOUR REALITY

PRE / POST CHECKS

Date: 2018-05-29 Manufacturer: IHP Model: INOV STOVES

Project #: PI 2165 Run: 5 Tech: MM Reviewer: DB

Moisture Meter Calibration Check:	Equipment #	Time	12%	22%
	EM-19	7:00	ok	ok

Pre-Test **Post-Test**

Facility Conditions:

	Pre-Test	Post-Test
Air Velocity from less than 2 feet	3 (max50 Fpm)	5 (max50 Fpm)
Smoke Capture Check	ok	ok
Picture (4 sides)	ok	ok

Wood Heater Conditions:

Date Wood Heater Stack Cleaned	2018-05-23
Date Dilution Tunnel Cleaned	2018-05-23
Induced Draft Check (max 0.005 H2O)	ok
Traverse before ignition	ok

Temperature System:

Ambient (65°-90°F)	ok °F

Proportional Checks:

Thermocouple check	ok
Pitot Clean	ok
Pitot verification	ok

Sampling Train ID Numbers:

	High fire test			Medium low fire test		
	1st hour	Train 1	Train 2	1st hour	Train 1	Train 2
Probe				30	34	50
Filter Front				808	810	812
Filter Back				809	811	813
Filter Thermocouple				11	h	12
Filter (80°F ≥ <90°F)				ok	ok	ok

POLYTESTS
TESTING THROUGH YOUR REALITY

SAMPLING EQUIPMENT CHECK OUT

Date: 2018-05-29 Manufacturer: IHP Model: IRON STRIKE

Project #: PI 20165 Run: 5 Tech: MM Reviewer: DP

Leakage Checks Tunnel Samplers

High fire test	System 1st hour		System 1		System 2	
Unplugged Flow Rate = .25cfm	Pre-Test ASTM (-15) CSA B415 (-5)	Post-Test (max test)	Pre-Test ASTM (-15) CSA B415 (-5)	Post-Test (Max test)	Pre-Test ASTM (-15) CSA B415 (-5)	Post-Test (Max test)
Vacuum (inches Hg.)						
Final 1minute DGM (Liter)						
Initial 1minute DGM (Liter)						
Change © (Liter)						
Allowable leakage .04 x Sample rate or 0.28Lpm CSA B415 (0.56)						
Check OK						

Low medium fire test	System 1st hour		System 1		System 2	
Unplugged Flow Rate = .25cfm	Pre-Test ASTM (-15) CSA B415 (-5)	Post-Test (max test)	Pre-Test ASTM (-15) CSA B415 (-5)	Post-Test (Max test)	Pre-Test ASTM (-15) CSA B415 (-5)	Post-Test (Max test)
Vacuum (inches Hg.)	-15	-15	-15	-15	-15	-15
Final 1minute DGM (Liter)	682941,98	684109,95	682942,21	684110,05	635465,77	636670,04
Initial 1minute DGM (Liter)	682941,95	684109,95	682942,19	684110,04	635465,77	636670,04
Change © (Liter)	0,03	Ø	0,02	0,01	Ø	Ø
Allowable leakage .04 x Sample rate or 0.28Lpm CSA B415 (0.56)						
Check OK	ok	ok	ok	ok	ok	ok

POLYTESTS
TESTING THROUGH YOUR REALITY

SAMPLING EQUIPMENT CHECK OUT

Date: 2018-05-29 Manufacturer: IHP Model: IRON STRIKE

Project #: PJ 20165 Run: 5 Tech: MM Reviewer: DP

Leakage Checks Flue Gas Sampler

Plugged Probe	Pre-Test	Post Test
Vacuum (inches Hg.)	-5	-5
Rotameter Reading (mml/min.)	0	0
Flow Rate (lpm)	1.5	1.5
Allowable (.02 x Sample Rate)	30	30
Check OK	ok	OK

Leakage Checks Pitot

Plugged Probe	Pre Test 3 H2o static	Pre Test 0.4-0.5 H2o velocity	Post Test 3 H2o Static	Post Test 0.4-0.5 H2o velocity
Vacuum (inches Hg.)	3	.4	3	.4
Check OK (no change after 15 sec.)	ok	ok	ok	ok

POLYTESTS
TESTING THROUGH YOUR REALITY

PRE-TEST SCALE AUDIT

Date: 2018-05-29 Manufacturer: IHP Model: IRON STRIKE
Project #: PI 20165 Run: 5 Tech: MN Reviewer: DP

Scale Type	Audit		Measured Weight
	Equipment #	Weight	
Platform	EM-090	44 lbs, Class F	44 lbs
Wood	EM-090	4.4 lbs, Class F	4.4 lbs
Analytical	EM-128	100 mg, Class S	100 mg
Analytical	EM-129	200 g, Class S	200 g

LIMITS OF WEIGHT RANGES

ANALYTICAL SCALE: ..... 50%-150% of dry filter weight, ± 0.1 mg
PLATFORM SCALE..... 20%-80% of ideal test load weight, ± 0.1 lbs or 1%
WOOD SCALE ..... 20%-80% of ideal test load weight, ± 0.01 lbs or 1%

Date: 2018-05-29 Manufacturer: IHP Model: Non stack kit

Project #: pI 2165 Run: 5 Tech: M M Reviewer: DP

FOR TUNNELS < 12 in

Barometric pressure (P_{bar}) 101.1 (KPa.) Static pressure (P_q) 0.14 (inches w.c.)
Inside diameter: Port A _____ Port B ____.
Tunnel cross sectional area: .1963Ft²
Pitot tube type: Standard

Traverse Point	Position (inches)			Velocity Head Δ_p (inches H_2O)	Tunnel Temperature (°F)
	6 po	7 po	8 po		
A- Centroid	3.00	3.50	4	0059	7702
B - Centroid	3.00	3.50	4	0059	7695
A-1	0.40	0.50	0.50	0049	7701
A-2	1.50	1.75	2	0052	7701
A-3	4.50	5.25	6	0059	7698
A-4	5.60	6.5	7.5	0050	7697
B-1	0.40	0.50	0.50	0049	7696
B-2	1.50	1.75	2	0058	7682
B-3	4.50	5.25	6	0054	7684
B-4	5.60	6.5	7.5	0049	7681
				AVERAGE	

$$v_s = K_p C_p (\sqrt{\Delta p})_{avg} \sqrt{\frac{(T_s)_{avg}}{P_s M_s}}$$

Where,
C_p = pitot tube coefficient, dimension less = 0.99 for standard pitot.
Δ_p = manometer reading (inches H_2O)
T_s = average absolute dilution tunnel temperature (°F + 460)
P_s = absolute dilution tunnel gas pressure or $P_{bar} + P_{qg}$
P_q = static pressure $\frac{\text{in. } H_2O}{\{\ 13.6\ \}}$
M_s = 28.56, wet molecular weight of stack gas (alternatively, it may be measured)
K_p = 85.49 pitot tube constant, (conversion factor for English units)

$\Delta_p$avg. = average of the square roots of the velocity heads (Δ_p) measured at each traverse point.

POLYTESTS
TESTING THROUGH YOUR REALITY

CONTINUOUS ANALYZERS

Date: 2018-05-29 Manufacturer: IHp Model: Iron Strike
Project #: PI 20165 Run: 5 Tech: MM Reviewer: DP

Pre-Test (Adjust and Record)

	ZERO		SPAN		CAL. (Record Only)	
CO	0	0	2,939	3,000	0,978	1,000
Tolerance CO		+/- 0.02		+/- 0.15		+/- 0.05
CO_2	0	0	18,08	18,00	9,85	10,00
Tolerance CO2		+/- 0.02		+/- 0.5		+/- 0.5
O_2 informative CSA B415 calculated value	na	na	na	na	na	na
	Actual	Should Be	Actual	Should Be	Actual	Should Be

Post Test (Record Only)

	Zero	Span	Cal.	Zero Drift	Limit	Span Drift	Limit	Cal. Drift	Limit	OK?	Not OK*
CO	0	2,940	0,988	0	0.02	0,001	0.15	0,01	0.05	✓	
CO_2	0	18,01	9,90	0	0.02	0,07	0.5	0,05	0.5	✓	

POLYTESTS
TESTING THROUGH YOUR REALITY

TEST DATA LOG

Date: 2018-05-29 Manufacturer: IKEA Model: IKEA STARKVIND

Project #: PT 2165 Run: 5 Tech: MM Reviewer: DL

RAW DRY GAS METER READINGS

		System 1	System 2	Blank
High fire test	Final (Liter)			
	Initial (Liter)			
Low medium fire test	Final (Liter)	684109,14	636693,21	7148,75
	Initial (Liter)	682944,62	635467,05	7128,45

AMBIENT CONDITIONS

	Before	After
Barometer (kPa):	101,1	101,1
Dry Bulb (F):	~~57~~ 77,81	85,40
Humidity (%):	52,4	37,7

POLYTESTS
TESTING THROUGH YOUR REALITY

FUEL DATA

Date: 2018-05-29 Manufacturer: IHP Model: Low Strike

Project #: pI 20165 Run: 5 Tech: MS Reviewer: NP

FUEL DESCRIPTION:

Type of wood:

KINDLING AND START-UP LOAD

Piece Size				Weight		Meter Moisture Content (% dry)				
	x	x 16	in.	2800	lbs.	91	96	90	92	92
	x	x 16	in.	435	lbs.	193	194	195	192	193
	x	x	in.		lbs.					
	x	x	in.		lbs.					
	x	x	in.		lbs.					
	x	x	in.		lbs.					
	x	x	in.		lbs.					
	x	x	in.		lbs.					
	x	x	in.		lbs.					

HIGHFIRE TEST LOAD

Piece Size				Weight		Meter Moisture Content (% dry)				
3.00	x 3.50	x 16	in.	3098	lbs.	197	195	190	195	196
3.5	x 3.75	x 16	in.	3016	lbs.	191	194	196	197	198
3.00 ~~2.75~~	x 3.750	x 16	in.	3089	lbs.	217	213	218	211	210
	x	x	in.		lbs.					
4.50	x 5	x 16	in.	5912	lbs.	213	211	208	216	208
	x	x	in.		lbs.					
	x	x	in.		lbs.					
	x	x	in.		lbs.					
	x	x	in.		lbs.					

POLYTESTS
TESTING THROUGH YOUR REALITY

FUEL DATA

Date: 2018-05-29 Manufacturer: IHP Model: Low Stroke

Project #: PI 20165 Run: 5 Tech: MM Reviewer: DP

FUEL DESCRIPTION:

Type of wood:

LOW OR MEDIUM TEST LOAD

Piece Size	Weight		Meter Moisture Content (% dry)				
325 x 350 x 16 in.	3 006	lbs.	24.2	23.8	22.2	24.0	24.9
375 x 375 x 16 in.	3 526	lbs.	19.1	20.0	20.9	20.5	20.9
325 x 375 x 16 in.	3 606	lbs.	20.9	21.6	22.9	21.8	22.2
x x in.		lbs.					
4.06 x 3.25 x 16 in.	5 232	lbs.	21.6	20.0	20.4	20.8	19.3
2.75 x 2.50 x 16 in.	2 800	lbs.	19.0	19.0	19.9	19.0	20.0
x x in.		lbs.					
x x in.		lbs.					
x x in.		lbs.					
x x in.		lbs.					
x x in.		lbs.					
x x in.		lbs.					
x x in.		lbs.					
x x in.		lbs.					

POLYTESTS
TESTING THROUGH YOUR REALITY

DILUTION TUNNEL PARTICULATE SAMPLER DATA

Date:_____ Manufacturer:_____ Model:_____

Project #:_____ Run:_____ Tech:_____ Reviewer:_____

		HIGHFIRE TEST FILTERS								
		SYSTEM 1 – 1st hour				SYSTEM 1				
Pre-test Weight Record		Probe & Housing Number	Front Filter Number	Back Filter Number	gaskets	Probe & Housing Number	Front Filter Number	Back Filter Number	gaskets	Blanck
Date	Time									

		SYSTEM 1 – 1st hour				SYSTEM 1				
Post-test Weight Record		Probe & Housing Number	Front Filter Number	Back Filter Number	gaskets	Probe & Housing Number	Front Filter Number	Back Filter Number	gaskets	Blanck
Date	Time									

POLYTESTS
TESTING THROUGH YOUR REALITY

DILUTION TUNNEL PARTICULATE SAMPLER DATA

Date:_____ Manufacturer:_____ Model:_____

Project #: _____ Run:_____ Tech:_____ Reviewer:_____

		HIGH FIRE TEST FILTERS			
		SYSTEM 2			
Pre-test Weight Record		Probe & Housing Number	Front Filter Number	Back Filter Number	gaskets
Date	Time				

		SYSTEM 2			
Post-test Weight Record		Probe & Housing Number	Front Filter Number	Back Filter Number	gaskets
Date	Time				

POLYTESTS
TESTING THROUGH YOUR REALITY

DILUTION TUNNEL PARTICULATE SAMPLER DATA

Date: 2018-05-28 Manufacturer: Ilp Model: Iron Strike

Project #: PT 20165 Run: 5 Tech: MS Reviewer: DP

		LOW OR MEDIUM TEST FILTERS								
		SYSTEM 1 – 1st hour				SYSTEM 1				
Pre-test Weight Record		Probe & Housing Number	Front Filter Number	Back Filter Number	gaskets	Probe & Housing Number	Front Filter Number	Back Filter Number	gaskets	Blanck
Date	Time	30 mm	808	809	16	34	810	811	20	814
2018-05-28	19:00	110,2290 ~~110,2290~~	0,0853	0,0849	35,6368	110,1024	0,0859	0,0846	35,4748	0,0850
2018-05-29	9:30	110,2291	0,0853	0,0849	35,6367	110,1025	0,0859	0,0846	35,4746	0,0850

		SYSTEM 1 – 1st hour				SYSTEM 1				
Post-test Weight Record		Probe & Housing Number	Front Filter Number	Back Filter Number	gaskets	Probe & Housing Number	Front Filter Number	Back Filter Number	gaskets	Blanck
Date	Time	30	808	~~808~~ 809 mm	16	34	810	811	20	814
2018-05-29	16:00	110,2292	0,0879	0,0845	35,6402	110,1026	0,0863	0,0840	35,4769	0,0851
2018-06-06	8:00	110,2292	0,0872	0,0841	35,6400	110,1026	0,0859	0,0839	35,4760	0,0851
2018-06-13	8:00	110,2292	0,0871	0,0841	35,6400	110,1026	0,0858	0,0839	35,4760	0,0851

POLYTESTS
TESTING THROUGH YOUR REALITY

DILUTION TUNNEL PARTICULATE SAMPLER DATA

Date: 2018-05-28 Manufacturer: IAP Model: Non stroke

Project #: PT 20165 Run: 5 Tech: MS Reviewer: DP

		LOW OR MEDIUM FIRE TEST FILTERS			
		SYSTEM 2			
Pre-test Weight Record		Probe & Housing Number	Front Filter Number	Back Filter Number	gaskets
Date	Time	50	812	813	42
2018-05-28	19:00	107,6463	0,0856	0,0845	35,4933
2018-05-29	9:30	107,6464	0,0856	0,0845	35,4933

		SYSTEM 2			
Post-test Weight Record		Probe & Housing Number	Front Filter Number	Back Filter Number	gaskets
Date	Time	50	812	813	42
2018-05-29	16:00	107,6465	0,0889	0,0838	35,4964
2018-06-06	8:00	107,6465	0,0886	0,0838	35,4958
2018-06-13	8:00	107,6465	0,0885	0,0837	35,4958

APPENDIX 2: Proportionality results

	Outlet	Outlet	Average	Average	#1	#2		
Tunnel	Temp.	Temp.	98,53	97,29	System 1	System 2		SQRT
Velocity	Meter 1	Meter 2	**Proportional Rates**		Vol.Std.	Vol.Std.		Delta-P
			PR1	**PR2**			Time	
Ft/Sec	Deg. R	Deg. R	**%**	**%**	(ft3)	(ft3)	min	(in H2O)2
15,297	540,8	540,8			0,157	0,158	0	0,2356905
15,367	541,1	541,0	94,99	92,63	0,157	0,158	1	0,2374065
15,268	541,1	541,1	95,72	93,33	0,157	0,158	2	0,2348286
15,330	541,0	541,1	97,57	94,59	0,157	0,158	3	0,2337457
15,054	541,0	541,1	102,48	99,09	0,157	0,158	4	0,2262457
15,492	541,0	541,2	101,23	98,85	0,157	0,158	5	0,2300267
15,485	541,1	541,3	102,04	100,17	0,156	0,158	6	0,2284778
15,471	541,3	541,5	103,54	101,21	0,156	0,158	7	0,2273655
15,341	541,5	541,7	106,27	102,34	0,157	0,158	8	0,2246725
15,443	541,6	541,9	104,85	103,01	0,157	0,158	9	0,2251234
15,463	541,8	542,1	103,96	103,34	0,155	0,158	10	0,2251281
15,523	542,0	542,4	105,91	102,62	0,156	0,158	11	0,2257991
15,490	542,2	542,6	103,70	99,42	0,158	0,157	12	0,2284791
15,462	542,3	542,7	101,83	97,59	0,158	0,157	13	0,2300286
15,046	542,3	542,8	103,74	99,94	0,158	0,157	14	0,2251237
15,255	542,2	542,8	105,03	104,13	0,156	0,158	15	0,2224041
15,380	542,2	542,8	102,97	100,20	0,155	0,158	16	0,2273665
15,284	542,2	542,8	98,73	96,52	0,156	0,158	17	0,2311288
15,188	542,1	542,8	96,59	96,05	0,155	0,158	18	0,2311289
15,273	542,2	542,8	97,98	97,47	0,153	0,158	19	0,2300282
15,312	542,3	543,0	100,61	97,76	0,155	0,158	20	0,2293661
15,036	542,5	543,1	103,58	101,78	0,156	0,158	21	0,2230882
15,202	542,7	543,3	101,38	101,67	0,154	0,158	22	0,2246742
15,237	543,0	543,5	103,71	100,65	0,154	0,157	23	0,225125
15,288	543,2	543,7	100,56	100,60	0,154	0,157	24	0,226249
15,431	543,4	543,9	99,64	99,51	0,152	0,158	25	0,2284811
14,971	543,6	544,1	104,53	102,22	0,154	0,158	26	0,2219491
15,280	543,7	544,2	101,57	98,76	0,155	0,157	27	0,2273682
15,246	543,8	544,4	101,46	98,46	0,156	0,157	28	0,2278137
15,198	543,9	544,5	100,76	97,86	0,156	0,157	29	0,2278135
15,063	544,0	544,5	101,46	98,64	0,156	0,157	30	0,2262496
15,020	544,0	544,6	99,85	98,79	0,155	0,157	31	0,22625
15,267	544,0	544,6	98,72	95,86	0,155	0,157	32	0,230471
15,141	544,0	544,6	99,29	96,76	0,155	0,157	33	0,2289404
15,063	544,1	544,7	97,46	97,66	0,154	0,157	34	0,227814
15,208	544,0	544,7	97,14	96,55	0,152	0,157	35	0,2298714
15,297	544,0	544,7	98,23	95,97	0,154	0,157	36	0,2311305
15,188	544,0	544,7	98,74	97,29	0,155	0,157	37	0,2293685
14,723	544,0	544,7	100,41	100,33	0,154	0,158	38	0,2224055
15,287	544,0	544,7	98,13	95,99	0,154	0,157	39	0,2311313
15,206	544,0	544,7	96,56	96,71	0,153	0,157	40	0,2300314
15,124	544,0	544,7	96,78	96,89	0,152	0,157	41	0,2289027
15,274	544,0	544,7	95,82	95,92	0,152	0,157	42	0,2311315
15,115	544,0	544,7	96,69	96,62	0,152	0,157	43	0,2289251
15,293	544,0	544,7	98,04	95,91	0,153	0,157	44	0,2315694
14,907	544,0	544,7	100,06	97,92	0,155	0,157	45	0,2258025
15,087	544,1	544,8	99,14	97,31	0,155	0,157	46	0,2284822
15,073	544,1	544,8	98,54	96,70	0,155	0,157	47	0,2284823
14,926	544,1	544,8	98,78	98,39	0,154	0,157	48	0,2262503
14,909	544,1	544,8	100,22	97,81	0,154	0,157	49	0,2258028
15,136	544,2	544,9	99,26	96,96	0,155	0,157	50	0,2289262
15,212	544,2	544,9	96,08	96,36	0,153	0,157	51	0,2300318
15,179	544,2	544,9	98,62	97,45	0,153	0,158	52	0,2293693
15,135	544,2	544,9	97,74	97,41	0,153	0,158	53	0,2284832
15,107	544,2	544,9	97,68	98,04	0,152	0,158	54	0,2278153
15,323	544,2	544,9	95,65	96,29	0,151	0,157	55	0,2311328
15,267	544,2	544,9	98,62	97,67	0,153	0,158	56	0,2300322
15,224	544,2	544,9	99,08	96,94	0,155	0,158	57	0,2293696
15,166	544,2	544,9	97,74	97,54	0,154	0,157	58	0,2287308
15,230	544,2	544,9	96,07	96,57	0,152	0,157	59	0,2300319
15,280	544,1	544,9	97,33	96,06	0,153	0,158	60	0,2315704
15,230	544,1	544,9	95,98	95,51	0,153	0,157	61	0,231132
15,243	544,1	544,8	96,88	95,99	0,153	0,158	62	0,2317753

15,008	544,1	544,8	96,50	96,48	0,153	0,158	63	0,2284823
15,096	544,1	544,8	95,65	95,92	0,152	0,157	64	0,2300323
15,150	544,1	544,8	97,64	95,39	0,154	0,157	65	0,2311322
14,986	544,1	544,8	95,93	96,09	0,154	0,157	66	0,2289259
15,180	544,0	544,8	94,48	94,34	0,152	0,157	67	0,2320084
14,920	544,0	544,7	97,37	96,44	0,152	0,157	68	0,2278145
15,004	544,0	544,7	95,15	95,67	0,152	0,157	69	0,2293693
14,993	544,0	544,7	95,52	96,02	0,151	0,157	70	0,2289261
15,101	544,0	544,7	97,67	95,75	0,153	0,157	71	0,2304716
15,029	543,9	544,7	97,45	96,33	0,155	0,158	72	0,229357
15,013	543,9	544,7	96,16	96,29	0,153	0,158	73	0,2289297
15,155	543,9	544,7	97,44	96,14	0,153	0,158	74	0,2311316
14,921	543,9	544,7	96,68	96,59	0,154	0,158	75	0,2278151
15,082	544,0	544,7	97,90	96,09	0,154	0,158	76	0,2300315
15,170	544,0	544,7	97,68	95,47	0,155	0,158	77	0,2311319
14,977	544,0	544,7	96,09	96,34	0,153	0,157	78	0,228483
15,352	544,0	544,7	93,54	93,32	0,151	0,157	79	0,2341843
15,087	544,0	544,7	97,05	95,69	0,152	0,157	80	0,230032
15,136	544,1	544,8	96,85	96,08	0,154	0,158	81	0,2304722
15,117	544,0	544,7	96,01	96,02	0,153	0,158	82	0,2300321
15,142	544,0	544,7	95,86	95,42	0,152	0,157	83	0,2304716
15,145	544,0	544,7	97,40	96,06	0,153	0,157	84	0,2304727
15,041	544,0	544,7	98,63	97,23	0,155	0,158	85	0,2284827
15,011	544,0	544,7	99,51	97,82	0,155	0,158	86	0,2278155
15,107	544,1	544,8	98,83	97,14	0,156	0,158	87	0,2293696
14,967	544,1	544,8	99,39	97,94	0,155	0,158	88	0,2273701
15,152	544,1	544,8	97,17	96,15	0,155	0,158	89	0,2304722
15,113	544,1	544,8	97,20	95,80	0,154	0,157	90	0,2300324
15,193	544,1	544,8	94,34	94,82	0,152	0,157	91	0,2315703
15,075	544,2	544,9	98,08	96,23	0,153	0,157	92	0,2300323
15,085	544,2	544,9	95,43	95,57	0,153	0,158	93	0,2300328
15,090	544,2	544,9	95,24	95,58	0,151	0,157	94	0,2300327
15,114	544,2	544,9	95,43	95,83	0,151	0,157	95	0,2304475
15,073	544,2	544,9	97,49	96,30	0,153	0,158	96	0,2300322
15,132	544,2	544,9	95,84	95,63	0,154	0,158	97	0,231132
15,126	544,3	544,9	96,47	95,15	0,153	0,158	98	0,2311321
15,058	544,3	545,0	95,31	95,08	0,153	0,157	99	0,2300325
15,015	544,3	545,0	98,01	96,51	0,153	0,157	100	0,2293698
14,923	544,3	544,9	96,35	95,88	0,153	0,157	101	0,2278159
14,999	544,3	544,9	95,27	96,55	0,151	0,157	102	0,2289178

	Outlet	Outlet	Average	Average	#1	#2		
Tunnel	Temp.	Temp.	99,21	99,25	System 1	System 2		SQRT
Velocity	Meter 1	Meter 2	**Proportional Rates**		Vol.Std.	Vol.Std.		Delta-P
			PR1	**PR2**			Time	
Ft/Sec	Deg. R	Deg. R	**%**	**%**	(ft3)	(ft3)	min	(in H2O)2
15,174	544,0	544,8			0,154	0,157	0	0,2278158
15,113	543,9	544,7	106,72	106,02	0,154	0,157	1	0,2273707
15,225	543,9	544,8	107,70	107,54	0,154	0,157	2	0,2262517
15,258	543,9	544,7	106,24	106,62	0,153	0,157	3	0,2278157
15,264	544,0	544,8	109,26	109,32	0,153	0,157	4	0,2246771
15,283	544,3	545,0	109,50	109,94	0,153	0,158	5	0,2251278
15,212	544,5	545,2	110,04	109,53	0,153	0,157	6	0,2239989
15,323	544,8	545,5	107,15	107,03	0,153	0,157	7	0,2273709
15,136	545,0	545,7	108,52	108,53	0,153	0,157	8	0,2246773
15,326	545,1	545,8	107,41	107,31	0,153	0,157	9	0,2273703
15,101	545,3	546,0	107,73	107,91	0,153	0,157	10	0,2246776
15,382	545,5	546,2	108,26	106,16	0,154	0,157	11	0,2289274
15,094	545,6	546,3	108,58	107,80	0,155	0,157	12	0,2246776
15,194	545,7	546,5	107,39	107,71	0,153	0,157	13	0,2262522
15,191	545,8	546,6	108,54	107,73	0,154	0,157	14	0,2262525
15,234	545,9	546,7	107,36	105,26	0,156	0,158	15	0,2293709
15,127	545,9	546,7	106,18	104,40	0,156	0,158	16	0,2293711
15,118	545,9	546,7	105,61	103,78	0,156	0,158	17	0,2302031
15,116	545,9	546,8	103,18	104,07	0,155	0,158	18	0,2300338
15,051	545,8	546,8	105,38	104,37	0,154	0,158	19	0,2293714
15,748	545,8	546,8	98,34	99,63	0,154	0,158	20	0,2403884
14,906	545,8	546,8	105,98	105,08	0,154	0,158	21	0,2273722
15,138	545,8	546,8	102,99	102,69	0,154	0,158	22	0,2311344
15,180	545,7	546,7	104,30	102,88	0,155	0,158	23	0,2319585
15,080	545,7	546,7	102,15	103,54	0,154	0,158	24	0,230474
15,306	545,8	546,8	102,49	101,59	0,154	0,158	25	0,2341143
15,169	545,8	546,8	103,29	102,78	0,155	0,158	26	0,2320103
15,110	545,8	546,8	103,22	101,75	0,155	0,158	27	0,2320107
15,058	545,9	546,8	103,15	102,09	0,155	0,157	28	0,2311347
15,081	545,9	546,8	100,52	101,88	0,153	0,157	29	0,2315728
15,007	545,9	546,8	104,20	102,75	0,153	0,158	30	0,2304747
15,000	545,9	546,8	103,89	102,54	0,156	0,158	31	0,2304748
15,001	546,0	546,8	103,85	102,72	0,155	0,158	32	0,2304747
15,212	546,0	546,9	101,75	101,82	0,155	0,158	33	0,2338143
15,130	546,0	546,9	100,36	101,35	0,153	0,158	34	0,2326661
15,055	546,0	546,9	102,55	101,66	0,153	0,157	35	0,2315679
14,978	546,0	546,9	100,73	102,14	0,153	0,157	36	0,2304748
15,022	546,0	546,9	102,33	102,74	0,152	0,158	37	0,2311348
15,078	546,0	546,9	103,02	101,97	0,155	0,158	38	0,2320108
14,879	546,0	546,9	104,21	103,79	0,155	0,158	39	0,2289287
15,215	546,0	546,9	100,28	101,35	0,154	0,159	40	0,2341876
15,061	546,0	546,9	102,38	102,13	0,154	0,158	41	0,2320111
15,190	546,0	546,9	101,34	100,65	0,155	0,158	42	0,2341872
14,980	546,0	546,8	101,77	101,52	0,154	0,157	43	0,2311313
15,145	545,9	546,8	100,64	100,89	0,153	0,158	44	0,2337545
14,968	545,9	546,8	100,94	102,12	0,153	0,158	45	0,2311347
14,851	545,9	546,8	101,39	102,52	0,152	0,158	46	0,2293724
14,962	545,9	546,7	101,45	102,18	0,152	0,158	47	0,2311353
14,918	545,8	546,7	100,22	101,72	0,152	0,158	48	0,2304749
15,053	545,8	546,7	99,62	100,98	0,151	0,157	49	0,2326671
14,953	545,8	546,7	100,69	101,58	0,152	0,158	50	0,2311356
15,000	545,7	546,6	99,59	101,14	0,152	0,158	51	0,2320113
14,956	545,7	546,6	102,61	101,66	0,153	0,158	52	0,2315735
14,951	545,8	546,6	99,93	100,83	0,153	0,158	53	0,2315727
15,018	545,8	546,6	99,24	100,62	0,151	0,157	54	0,2326663
14,974	545,8	546,6	101,75	101,33	0,153	0,158	55	0,2320117
14,863	545,8	546,6	100,43	101,53	0,153	0,158	56	0,2304753
14,957	545,7	546,6	99,87	101,00	0,152	0,158	57	0,2320114
14,899	545,7	546,5	99,88	101,24	0,152	0,158	58	0,231135
15,058	545,7	546,5	100,60	100,32	0,153	0,158	59	0,2337537
14,933	545,7	546,5	99,83	100,57	0,153	0,158	60	0,2320113
14,829	545,7	546,5	100,13	101,46	0,152	0,158	61	0,230475
15,072	545,7	546,5	98,46	99,58	0,151	0,157	62	0,2341877
14,825	545,7	546,5	101,97	101,67	0,153	0,158	63	0,2304749

14,888	545,7	546,5	101,35	100,99	0,154	0,158	64	0,2315733
15,024	545,6	546,4	101,29	100,72	0,155	0,158	65	0,2337544
15,047	545,6	546,4	98,38	99,65	0,154	0,158	66	0,2341875
15,013	545,6	546,4	101,27	100,25	0,154	0,158	67	0,2337544
15,024	545,6	546,4	97,85	99,22	0,153	0,158	68	0,2341909
14,918	545,6	546,4	99,05	99,96	0,151	0,157	69	0,2326664
15,079	545,6	546,4	100,06	99,66	0,154	0,158	70	0,2352696
15,050	545,5	546,3	99,60	99,43	0,155	0,158	71	0,2348366
14,914	545,5	546,3	98,91	99,81	0,153	0,158	72	0,2326667
15,073	545,5	546,2	99,75	99,21	0,153	0,158	73	0,2352147
15,065	545,4	546,2	99,63	99,00	0,155	0,158	74	0,2352692
14,762	545,4	546,2	100,87	101,14	0,154	0,158	75	0,2304756
14,867	545,4	546,1	100,91	100,75	0,154	0,158	76	0,2321964
14,759	545,3	546,1	101,94	101,20	0,155	0,158	77	0,2304742
15,000	545,3	546,0	100,22	99,46	0,155	0,158	78	0,2344483
15,027	545,3	546,0	97,90	99,01	0,154	0,158	79	0,2348364
14,960	545,3	546,0	97,88	99,43	0,151	0,158	80	0,2337542
14,883	545,3	546,0	101,46	100,29	0,154	0,158	81	0,2326648
14,880	545,3	546,0	100,70	100,67	0,155	0,159	82	0,2326663
15,049	545,2	545,9	97,79	98,59	0,153	0,158	83	0,2352687
14,970	545,2	545,9	97,97	99,32	0,152	0,158	84	0,2341874
15,005	545,2	545,9	97,67	98,29	0,152	0,157	85	0,2348368
14,966	545,2	545,9	99,55	98,98	0,153	0,157	86	0,2341875
14,930	545,2	545,9	98,17	99,42	0,153	0,158	87	0,2337536
14,764	545,1	545,8	99,78	100,86	0,152	0,158	88	0,2311349
15,007	545,1	545,8	97,30	98,68	0,152	0,158	89	0,2348368
15,002	545,1	545,8	100,01	99,30	0,153	0,158	90	0,2348364
14,827	545,0	545,7	99,11	100,26	0,154	0,158	91	0,2320113
14,934	545,0	545,7	99,51	100,37	0,153	0,159	92	0,2337538
14,831	545,0	545,7	101,22	101,00	0,155	0,159	93	0,2320104
14,967	545,0	545,7	97,77	99,01	0,153	0,158	94	0,2341873
15,007	544,9	545,6	98,77	98,75	0,152	0,157	95	0,2348357
14,875	544,9	545,6	101,51	100,14	0,155	0,158	96	0,2327211
14,871	544,9	545,6	100,99	100,29	0,156	0,158	97	0,232666
14,876	544,9	545,6	99,17	100,63	0,154	0,159	98	0,2326665
15,014	544,9	545,6	98,27	98,92	0,153	0,158	99	0,2348363
14,883	544,9	545,6	101,57	100,21	0,154	0,158	100	0,2326659
14,990	544,9	545,6	98,17	99,31	0,154	0,158	101	0,2341869
14,981	544,9	545,6	97,84	99,54	0,152	0,158	102	0,2341865
14,961	544,9	545,6	100,56	99,38	0,153	0,158	103	0,2337537
15,053	544,9	545,6	98,77	99,70	0,154	0,158	104	0,2352682
15,727	544,9	545,6	95,41	94,73	0,154	0,159	105	0,2458155
14,821	544,9	545,6	99,39	100,93	0,153	0,158	106	0,2315723
14,844	544,9	545,6	101,42	100,05	0,154	0,158	107	0,2320105
14,966	544,9	545,6	100,76	99,78	0,155	0,158	108	0,233753
14,989	544,9	545,6	98,70	100,04	0,154	0,158	109	0,2341864
14,822	545,0	545,6	101,54	100,23	0,154	0,158	110	0,2315727
15,020	545,0	545,6	97,86	98,94	0,154	0,158	111	0,2348381
14,961	545,0	545,6	98,67	99,31	0,152	0,158	112	0,2341864
14,934	545,0	545,6	98,49	99,69	0,153	0,158	113	0,2337537
14,856	545,0	545,6	99,79	100,11	0,153	0,158	114	0,2326656
14,793	544,9	545,6	99,25	100,09	0,153	0,158	115	0,2317674
14,941	544,9	545,5	100,10	99,17	0,154	0,158	116	0,2341864
14,935	544,9	545,5	100,47	99,31	0,156	0,158	117	0,2341867
14,999	544,9	545,5	97,83	99,07	0,154	0,158	118	0,2352676
15,065	544,9	545,5	99,60	98,26	0,154	0,158	119	0,2363436
14,827	544,9	545,5	100,89	99,61	0,156	0,158	120	0,2326655
15,019	544,9	545,5	97,20	98,69	0,154	0,158	121	0,2356986
14,916	544,9	545,5	99,80	99,63	0,154	0,159	122	0,2341867
15,053	544,9	545,5	98,58	97,77	0,155	0,158	123	0,2363441
15,049	544,9	545,5	96,68	97,94	0,153	0,158	124	0,2363423
14,770	544,9	545,5	98,83	100,30	0,152	0,158	125	0,232011
15,045	544,9	545,5	96,56	98,44	0,152	0,159	126	0,2363439
15,042	544,9	545,5	99,08	97,73	0,153	0,158	127	0,2363441
15,038	544,9	545,5	99,59	97,80	0,156	0,158	128	0,2363441
15,036	544,9	545,5	97,53	97,98	0,155	0,158	129	0,2363441
14,941	544,8	545,4	100,28	98,44	0,155	0,158	130	0,2348359
14,936	544,8	545,4	99,39	98,36	0,156	0,158	131	0,2348355
14,934	544,8	545,4	97,34	99,25	0,153	0,158	132	0,2348357

14,987	544,8	545,4	97,36	98,38	0,152	0,159	133	0,2356986
14,987	544,8	545,4	97,56	98,37	0,153	0,158	134	0,2356983
15,116	544,8	545,4	96,52	97,40	0,153	0,158	135	0,2378421
15,050	544,8	545,4	96,71	97,86	0,152	0,158	136	0,2367722
15,024	544,7	545,3	99,38	97,52	0,154	0,158	137	0,2363437
14,979	544,7	545,3	98,34	98,13	0,155	0,158	138	0,2356983
15,047	544,7	545,3	99,16	97,28	0,155	0,158	139	0,236772
14,852	544,6	545,2	100,15	98,66	0,156	0,157	140	0,2337536
14,879	544,6	545,2	99,80	98,70	0,156	0,158	141	0,2341863
14,975	544,6	545,2	97,27	98,36	0,154	0,158	142	0,235698
15,015	544,6	545,1	96,46	98,72	0,152	0,159	143	0,2363435
14,850	544,5	545,1	100,48	98,59	0,154	0,158	144	0,2337532
14,921	544,5	545,1	97,76	99,06	0,155	0,158	145	0,2349145
15,011	544,5	545,1	97,03	98,28	0,153	0,159	146	0,2363442
14,942	544,5	545,1	100,00	98,32	0,155	0,158	147	0,2352675
15,010	544,5	545,1	98,89	97,77	0,156	0,158	148	0,236344
15,010	544,5	545,0	97,05	98,38	0,154	0,158	149	0,2363438
14,967	544,4	545,0	98,96	98,13	0,154	0,158	150	0,2356984
14,964	544,4	545,0	99,36	97,76	0,156	0,158	151	0,2356983
14,842	544,4	545,0	100,61	99,02	0,156	0,158	152	0,2337608
14,936	544,4	545,0	99,46	98,05	0,156	0,158	153	0,2352676
14,936	544,4	545,0	96,78	98,90	0,154	0,158	154	0,2352673
14,962	544,4	544,9	96,82	98,69	0,152	0,159	155	0,2356976
14,907	544,4	544,9	96,92	98,79	0,152	0,159	156	0,2348353
14,865	544,3	544,9	100,16	98,44	0,154	0,158	157	0,2341853
14,697	544,3	544,9	100,99	99,74	0,156	0,158	158	0,2315718
14,906	544,3	544,9	97,92	99,03	0,154	0,158	159	0,2348352
14,905	544,3	544,8	97,56	99,19	0,153	0,159	160	0,2348352
14,931	544,3	544,8	97,07	98,61	0,152	0,159	161	0,2352674
14,903	544,3	544,8	97,03	98,64	0,152	0,159	162	0,2348357
14,931	544,3	544,8	97,04	98,57	0,152	0,158	163	0,2352675
14,958	544,2	544,8	97,35	98,04	0,152	0,158	164	0,2356978
15,066	544,2	544,8	98,01	97,79	0,154	0,158	165	0,2374142
14,900	544,2	544,8	97,57	98,83	0,154	0,159	166	0,2348348
14,926	544,2	544,7	96,94	98,80	0,152	0,159	167	0,2352675
14,995	544,2	544,7	97,47	98,48	0,153	0,159	168	0,2363431
15,180	544,2	544,7	98,13	96,51	0,155	0,159	169	0,2393302
14,954	544,1	544,7	99,36	98,39	0,156	0,158	170	0,2356986
14,925	544,1	544,7	99,70	98,21	0,156	0,158	171	0,2352669
14,897	544,1	544,7	96,89	98,89	0,154	0,158	172	0,234835
14,759	544,1	544,7	98,40	100,05	0,152	0,159	173	0,232665
14,895	544,1	544,7	99,50	98,80	0,154	0,159	174	0,2348347
14,922	544,1	544,6	97,27	98,75	0,154	0,159	175	0,2352676
14,950	544,1	544,6	99,41	98,32	0,154	0,159	176	0,2356982
15,083	544,1	544,6	96,48	97,11	0,155	0,158	177	0,2378411
15,015	544,1	544,6	97,50	98,18	0,153	0,159	178	0,2367718
15,016	544,1	544,6	99,03	97,77	0,155	0,159	179	0,2367717
14,987	544,1	544,6	97,74	97,35	0,155	0,158	180	0,2363429
14,919	544,1	544,6	97,79	97,84	0,154	0,157	181	0,235267
14,946	544,0	544,6	98,48	97,46	0,154	0,157	182	0,2356975
14,850	544,1	544,6	99,91	99,02	0,155	0,158	183	0,2341861
14,986	544,1	544,6	97,16	97,37	0,154	0,158	184	0,2363427
15,427	544,1	544,6	94,07	95,57	0,153	0,158	185	0,2433248
14,917	544,0	544,6	96,96	98,34	0,152	0,159	186	0,2352673
14,917	544,0	544,6	97,17	98,29	0,152	0,158	187	0,2352667
14,983	544,0	544,5	97,12	97,53	0,153	0,158	188	0,2363433
14,945	544,0	544,5	99,33	98,44	0,155	0,158	189	0,2356975
14,985	544,0	544,5	97,87	98,10	0,155	0,159	190	0,2363431
14,916	544,0	544,5	99,52	98,58	0,155	0,159	191	0,2352669
14,984	544,0	544,5	96,88	98,41	0,154	0,159	192	0,2363434
14,943	544,0	544,5	97,23	98,48	0,153	0,159	193	0,2356978
14,848	544,0	544,5	99,76	98,53	0,154	0,158	194	0,2341863
14,943	544,0	544,5	97,46	98,13	0,154	0,158	195	0,235698
14,941	544,0	544,5	97,49	98,06	0,153	0,158	196	0,2356977
14,708	544,0	544,5	101,29	99,86	0,155	0,158	197	0,23201
14,983	544,0	544,5	98,99	98,00	0,156	0,159	198	0,2363434
14,885	544,0	544,5	99,73	98,91	0,156	0,159	199	0,2348352
14,982	544,0	544,5	96,67	98,03	0,154	0,159	200	0,2363432
14,981	544,0	544,5	96,93	97,75	0,153	0,158	201	0,2363435

14,940	544,0	544,5	97,26	98,41	0,153	0,158	202	0,2356977
15,210	544,0	544,5	95,12	96,58	0,153	0,159	203	0,2399646
14,940	544,0	544,5	99,38	98,36	0,154	0,159	204	0,235698
14,980	544,0	544,5	99,09	98,04	0,156	0,159	205	0,2363431
14,814	544,0	544,4	97,94	98,90	0,154	0,158	206	0,2337524
14,979	544,0	544,4	99,09	97,92	0,154	0,158	207	0,2363429
15,006	544,0	544,4	96,45	97,12	0,154	0,158	208	0,2367716
14,910	543,9	544,4	99,10	98,68	0,154	0,158	209	0,2352672
14,978	543,9	544,4	98,79	97,90	0,156	0,159	210	0,2363427
14,938	543,9	544,4	96,73	97,65	0,154	0,158	211	0,2356975
14,937	543,9	544,4	99,41	98,66	0,154	0,158	212	0,2356972
15,167	543,9	544,4	97,45	96,75	0,156	0,159	213	0,2393281
14,974	543,9	544,4	97,17	97,76	0,154	0,158	214	0,236279
14,978	543,9	544,4	98,81	98,05	0,154	0,158	215	0,2363426
14,881	543,9	544,3	97,30	98,52	0,154	0,159	216	0,2348345
14,978	543,9	544,3	97,00	97,70	0,153	0,158	217	0,2363429
14,977	543,9	544,3	99,35	98,29	0,155	0,159	218	0,2363426
15,004	543,8	544,3	98,82	98,08	0,156	0,159	219	0,236771
14,977	543,8	544,3	97,06	97,57	0,155	0,158	220	0,2363427
14,936	543,8	544,3	99,09	98,14	0,154	0,158	221	0,2356973
14,934	543,8	544,3	97,51	97,80	0,155	0,158	222	0,2356968
15,794	543,8	544,3	93,73	92,87	0,155	0,158	223	0,2492999
14,934	543,8	544,3	99,59	98,54	0,156	0,159	224	0,2356972
14,934	543,8	544,3	97,04	97,86	0,155	0,159	225	0,2356977
14,933	543,8	544,3	99,31	97,94	0,154	0,158	226	0,2356971
14,906	543,8	544,3	99,86	98,57	0,156	0,158	227	0,2352663
14,934	543,8	544,3	98,62	98,04	0,156	0,159	228	0,2356972
14,737	543,8	544,3	98,42	99,65	0,154	0,159	229	0,2326034
14,934	543,8	544,3	96,76	98,22	0,152	0,159	230	0,235697
14,934	543,8	544,3	99,22	98,55	0,154	0,159	231	0,2356974
14,933	543,8	544,3	99,58	98,57	0,156	0,159	232	0,2356973
14,974	543,8	544,3	96,81	97,70	0,155	0,159	233	0,2363421
14,974	543,8	544,3	97,62	98,03	0,153	0,158	234	0,2363425
14,934	543,8	544,3	97,65	97,95	0,154	0,158	235	0,2356972
14,963	543,8	544,3	99,03	98,52	0,155	0,159	236	0,2361777
14,974	543,9	544,3	99,20	97,86	0,156	0,159	237	0,2363422
15,041	543,9	544,3	98,75	97,54	0,156	0,159	238	0,2374133
14,932	543,9	544,3	96,94	98,06	0,154	0,158	239	0,2356989
14,973	543,8	544,3	99,17	98,08	0,154	0,159	240	0,2363425
14,932	543,9	544,3	99,42	98,21	0,156	0,159	241	0,2356972
15,066	543,8	544,3	98,85	97,43	0,157	0,159	242	0,2378406
14,972	543,8	544,3	97,98	98,27	0,156	0,159	243	0,2363419
14,904	543,8	544,3	97,23	97,98	0,154	0,159	244	0,2352674
14,971	543,8	544,2	96,91	98,07	0,153	0,158	245	0,2363421
14,931	543,8	544,2	98,59	97,93	0,154	0,158	246	0,2356973
14,877	543,7	544,2	97,45	98,24	0,154	0,158	247	0,2348343
14,931	543,8	544,2	96,80	98,36	0,152	0,158	248	0,2356968
14,972	543,7	544,2	97,12	98,34	0,153	0,159	249	0,2363424
14,931	543,7	544,2	96,91	98,16	0,153	0,159	250	0,235697
14,932	543,7	544,2	97,20	97,90	0,153	0,158	251	0,2356972
14,972	543,7	544,2	97,60	97,27	0,153	0,158	252	0,2363423
14,877	543,7	544,2	99,83	98,57	0,155	0,158	253	0,2348343
14,973	543,7	544,2	99,38	97,80	0,157	0,158	254	0,2363425
15,040	543,7	544,2	98,43	97,26	0,156	0,158	255	0,2374126
14,932	543,7	544,2	97,96	98,86	0,155	0,159	256	0,2356969
14,972	543,7	544,2	97,22	97,89	0,154	0,159	257	0,2363426
14,905	543,7	544,1	97,06	98,28	0,153	0,158	258	0,2352655
14,972	543,7	544,1	96,88	97,85	0,153	0,158	259	0,2363423
14,973	543,7	544,1	98,62	97,95	0,154	0,159	260	0,2363421
14,932	543,7	544,1	96,99	98,27	0,154	0,159	261	0,2356967
14,973	543,7	544,1	97,43	97,86	0,153	0,159	262	0,2363419
15,135	543,7	544,1	96,04	97,26	0,153	0,159	263	0,2389019
14,973	543,7	544,1	99,56	97,86	0,155	0,159	264	0,2363389
14,932	543,7	544,1	99,31	97,74	0,157	0,158	265	0,2356967
14,973	543,7	544,1	98,99	97,92	0,156	0,158	266	0,2363425
14,878	543,7	544,1	100,34	98,74	0,157	0,159	267	0,2348342
14,973	543,7	544,1	98,79	98,30	0,156	0,159	268	0,2363415
14,963	543,7	544,1	99,11	98,39	0,156	0,159	269	0,2361682
14,972	543,7	544,1	98,96	97,98	0,156	0,159	270	0,2363402

14,973	543,7	544,1	97,75	98,24	0,155	0,159	271	0,2363418
15,000	543,7	544,1	98,75	97,23	0,155	0,158	272	0,2367703
14,930	543,7	544,1	96,41	98,66	0,154	0,159	273	0,2356966
14,875	543,7	544,1	100,07	98,30	0,154	0,159	274	0,2348335
14,971	543,6	544,1	98,39	98,19	0,156	0,159	275	0,2363423
14,740	543,7	544,1	98,84	99,04	0,154	0,158	276	0,232664
14,931	543,7	544,1	97,10	98,77	0,153	0,159	277	0,2356966
14,932	543,7	544,1	99,26	98,31	0,154	0,159	278	0,2356962
14,929	543,7	544,1	99,66	97,50	0,156	0,158	279	0,2356777
14,971	543,7	544,1	99,18	97,39	0,157	0,158	280	0,2363415
14,931	543,7	544,2	98,98	98,38	0,156	0,158	281	0,2356967
14,835	543,7	544,1	100,56	98,44	0,156	0,158	282	0,2341848
14,930	543,7	544,1	99,67	97,88	0,157	0,158	283	0,2356965
15,066	543,7	544,2	98,57	97,16	0,157	0,158	284	0,23784
14,999	543,7	544,1	98,22	97,42	0,156	0,158	285	0,23677
14,998	543,7	544,1	98,66	97,83	0,155	0,158	286	0,2367706
14,970	543,7	544,1	96,97	98,31	0,154	0,159	287	0,2363418
14,929	543,7	544,2	96,49	98,90	0,152	0,159	288	0,2356965
14,903	543,7	544,2	97,12	98,52	0,152	0,159	289	0,2352658
14,972	543,7	544,2	99,06	97,70	0,154	0,158	290	0,2363415
14,997	543,7	544,2	96,67	97,89	0,154	0,158	291	0,2367701
15,065	543,8	544,2	96,66	97,44	0,153	0,159	292	0,2378404
15,039	543,8	544,2	96,36	97,75	0,153	0,159	293	0,2374116
14,970	543,8	544,2	96,92	97,89	0,153	0,159	294	0,2363419
14,929	543,8	544,2	97,53	98,33	0,153	0,159	295	0,2356967
14,970	543,8	544,2	96,68	98,31	0,153	0,159	296	0,2363422
14,970	543,8	544,2	99,52	97,31	0,155	0,158	297	0,2363422
14,971	543,8	544,2	99,01	97,41	0,157	0,158	298	0,2363422
14,930	543,8	544,2	97,38	98,74	0,155	0,159	299	0,2356971
14,997	543,8	544,2	96,93	98,01	0,153	0,159	300	0,2367708
15,159	543,8	544,2	95,72	96,96	0,153	0,159	301	0,2393205
15,038	543,8	544,2	95,95	97,75	0,152	0,159	302	0,2374121
15,038	543,8	544,2	96,70	97,73	0,153	0,159	303	0,2374123
15,038	543,8	544,2	98,67	96,76	0,155	0,158	304	0,2374126
14,997	543,8	544,2	98,36	97,82	0,156	0,158	305	0,236771
14,996	543,8	544,2	96,47	98,00	0,154	0,159	306	0,2367704
14,996	543,8	544,2	99,21	97,50	0,155	0,159	307	0,2367709
14,735	543,8	544,2	99,09	99,13	0,155	0,158	308	0,232664
14,969	543,8	544,2	99,02	97,39	0,155	0,158	309	0,2363421
14,807	543,7	544,2	100,16	98,28	0,156	0,158	310	0,233803
14,969	543,7	544,2	96,95	98,15	0,155	0,158	311	0,2363425
14,926	543,7	544,2	99,37	97,90	0,155	0,159	312	0,2356965
15,826	543,8	544,2	91,64	92,80	0,155	0,159	313	0,2499129
15,035	543,8	544,2	98,59	97,07	0,155	0,158	314	0,2374124
14,968	543,8	544,2	96,42	98,37	0,154	0,159	315	0,2363421
14,966	543,8	544,2	98,99	97,39	0,154	0,159	316	0,2363425
14,926	543,8	544,2	99,17	98,26	0,156	0,158	317	0,2356969
15,034	543,8	544,2	96,48	98,12	0,154	0,159	318	0,2374133
15,061	543,8	544,2	96,52	97,25	0,153	0,159	319	0,2378401
14,926	543,8	544,2	97,20	98,59	0,153	0,159	320	0,2356969
14,925	543,8	544,2	96,74	98,33	0,153	0,159	321	0,2356982
14,829	543,8	544,2	97,72	99,27	0,152	0,159	322	0,2341855
15,128	543,8	544,2	97,88	97,00	0,154	0,159	323	0,2389049
15,734	543,8	544,2	91,83	93,39	0,154	0,159	324	0,248484
15,034	543,8	544,2	96,61	97,43	0,153	0,159	325	0,2374129
14,964	543,7	544,2	98,94	97,96	0,155	0,159	326	0,2363425
14,964	543,8	544,2	98,84	97,80	0,156	0,159	327	0,2363429
14,923	543,8	544,2	96,54	98,22	0,154	0,159	328	0,2356971
14,964	543,8	544,2	97,10	98,32	0,153	0,159	329	0,2363422
15,032	543,8	544,2	97,64	97,97	0,154	0,159	330	0,2374127
14,923	543,7	544,2	96,74	97,99	0,153	0,159	331	0,235697
14,867	543,8	544,2	97,30	98,06	0,152	0,158	332	0,2348336
15,057	543,8	544,2	96,29	97,56	0,153	0,158	333	0,2378403
15,030	543,8	544,2	96,12	97,21	0,153	0,159	334	0,2374129
14,921	543,8	544,2	99,13	97,90	0,154	0,158	335	0,2356967
15,124	543,7	544,2	98,11	96,54	0,156	0,158	336	0,2389049
14,920	543,7	544,2	99,20	97,93	0,156	0,158	337	0,2356967
15,150	543,7	544,2	98,04	96,73	0,156	0,158	338	0,2393287
15,216	543,7	544,2	96,82	96,13	0,156	0,159	339	0,2403868

14,892	543,7	544,2	99,10	98,98	0,156	0,159	340	0,2352667
14,898	543,7	544,2	99,77	98,22	0,156	0,159	341	0,2353883
15,027	543,7	544,2	96,59	96,87	0,155	0,158	342	0,237413
14,986	543,8	544,2	96,35	97,63	0,153	0,158	343	0,2367712
14,986	543,7	544,2	98,85	97,66	0,154	0,159	344	0,2367708
14,916	543,7	544,2	99,48	98,33	0,156	0,159	345	0,2356969
15,025	543,7	544,2	98,38	97,78	0,156	0,159	346	0,2374133
14,957	543,7	544,2	96,77	97,97	0,154	0,159	347	0,2363424
14,983	543,7	544,2	96,40	97,27	0,153	0,158	348	0,2367709
14,888	543,7	544,2	99,49	98,44	0,154	0,158	349	0,2352663

	Outlet	Outlet	Average	Average	#1	#2		
Tunnel	Temp.	Temp.	98,96	97,98	System 1	System 2		SQRT
Velocity	Meter 1	Meter 2	**Proportional Rates**		Vol.Std.	Vol.Std.		Delta-P
			PR1	**PR2**			Time	
Ft/Sec	Deg. R	Deg. R	**%**	**%**	(ft3)	(ft3)	min	(in H2O)2
14,367	544,7	545,4			0,158	0,157	0	0,2156917
14,756	544,6	545,3	109,16	104,85	0,159	0,158	1	0,2180298
14,551	544,5	545,3	105,14	104,19	0,158	0,160	2	0,2180296
14,779	544,5	545,3	105,66	103,46	0,156	0,160	3	0,2196519
14,597	544,5	545,3	109,66	105,91	0,157	0,159	4	0,2156916
14,727	544,6	545,4	110,59	105,77	0,159	0,159	5	0,2163962
14,729	544,7	545,5	108,70	107,16	0,158	0,159	6	0,2156918
14,772	544,9	545,6	108,59	108,18	0,155	0,160	7	0,2156919
14,652	545,0	545,7	110,41	108,81	0,155	0,160	8	0,2135656
14,815	545,2	545,9	108,94	107,74	0,155	0,159	9	0,2156921
14,798	545,4	546,0	108,90	108,22	0,155	0,159	10	0,2152212
14,724	545,5	546,2	112,50	108,38	0,157	0,159	11	0,214039
14,547	545,7	546,4	113,77	110,69	0,158	0,159	12	0,2111775
14,550	545,9	546,5	113,38	111,26	0,157	0,160	13	0,2106977
14,825	546,0	546,7	112,66	109,38	0,158	0,160	14	0,2145141
14,736	546,2	546,8	108,67	105,66	0,158	0,160	15	0,2175659
14,586	546,3	547,0	107,08	103,51	0,158	0,159	16	0,2180313
14,614	546,3	547,0	104,86	102,70	0,158	0,159	17	0,2196537
14,473	546,3	547,0	103,86	103,94	0,156	0,160	18	0,2180317
14,592	546,2	547,0	104,53	102,27	0,156	0,160	19	0,2203463
14,579	546,2	547,0	104,29	102,12	0,158	0,160	20	0,2203463
14,623	546,2	547,0	101,70	101,87	0,156	0,160	21	0,2212652
14,481	546,2	547,0	102,30	102,64	0,154	0,160	22	0,2191917
14,544	546,1	547,0	104,46	101,58	0,156	0,160	23	0,2203457
14,539	546,1	546,9	104,10	101,47	0,158	0,160	24	0,2203465
14,473	546,1	546,9	101,70	101,74	0,156	0,160	25	0,2196539
14,449	546,1	546,9	103,95	101,41	0,155	0,159	26	0,2192305
14,516	546,1	546,9	101,44	101,61	0,155	0,159	27	0,2203463
14,515	546,1	546,9	103,23	100,82	0,155	0,159	28	0,2203467
14,501	546,1	546,9	101,47	101,30	0,155	0,159	29	0,2203466
14,555	546,1	546,9	101,17	101,53	0,154	0,160	30	0,2212653
14,534	546,0	546,9	100,58	100,55	0,154	0,160	31	0,2212653
14,574	546,1	546,9	100,41	100,59	0,154	0,160	32	0,2219525
14,406	546,1	546,9	100,79	101,32	0,153	0,160	33	0,2196546
14,217	546,1	546,9	102,26	102,77	0,153	0,160	34	0,2168662
14,470	546,1	546,9	102,44	100,41	0,155	0,160	35	0,220806
14,494	546,1	546,9	102,50	100,56	0,157	0,160	36	0,2212656
14,279	546,1	546,9	101,31	101,73	0,155	0,160	37	0,2180317
14,557	546,1	546,9	100,86	100,36	0,154	0,160	38	0,222311
14,517	546,1	546,9	102,17	99,87	0,156	0,160	39	0,2219531
14,414	546,0	546,9	100,16	101,09	0,155	0,160	40	0,2203474
14,421	546,0	546,9	102,75	100,68	0,155	0,160	41	0,220347
14,444	546,0	546,9	99,80	100,15	0,155	0,159	42	0,2208063
14,474	546,0	546,8	100,72	99,76	0,154	0,159	43	0,2212661
14,354	546,0	546,8	100,65	100,79	0,154	0,159	44	0,2196647
14,537	545,9	546,8	101,28	99,90	0,155	0,160	45	0,2224091
14,513	545,9	546,8	101,90	99,98	0,157	0,160	46	0,2219462
14,493	545,9	546,8	99,46	99,04	0,155	0,159	47	0,2219535
14,265	545,9	546,8	100,73	101,20	0,153	0,159	48	0,218459
14,388	545,9	546,8	99,98	100,43	0,153	0,159	49	0,220347
14,316	545,9	546,8	102,64	101,45	0,155	0,160	50	0,2191928
14,516	545,9	546,8	99,37	99,10	0,155	0,160	51	0,2224091
14,386	545,9	546,8	100,28	99,87	0,153	0,159	52	0,2203472
14,338	545,9	546,7	102,54	100,99	0,155	0,159	53	0,2196552
14,523	545,9	546,7	101,55	99,70	0,157	0,160	54	0,2224085
14,560	545,9	546,7	101,27	99,32	0,157	0,160	55	0,2230922
14,496	545,8	546,7	101,56	99,80	0,157	0,160	56	0,2219534

14,452	545,8	546,7	101,85	100,30	0,156	0,160	57	0,221266
14,503	545,8	546,7	99,61	99,45	0,155	0,159	58	0,2219528
14,314	545,8	546,7	100,12	100,48	0,153	0,159	59	0,2191931
14,445	545,8	546,6	102,15	100,16	0,155	0,159	60	0,2212663
14,429	545,8	546,7	102,44	100,21	0,157	0,160	61	0,2208069
14,426	545,8	546,6	102,01	100,46	0,157	0,160	62	0,2208064
14,453	545,8	546,7	99,69	99,60	0,155	0,159	63	0,2212661
14,498	545,8	546,6	101,23	99,80	0,155	0,159	64	0,2219526
14,388	545,9	546,7	102,27	100,49	0,156	0,160	65	0,2203473
14,494	545,9	546,7	99,25	99,37	0,155	0,159	66	0,2219532
14,575	545,8	546,6	100,45	98,83	0,155	0,159	67	0,2235461
14,320	545,9	546,7	101,89	100,70	0,156	0,160	68	0,2196567
14,385	545,8	546,6	100,58	100,05	0,155	0,160	69	0,2208061
14,385	545,8	546,6	101,37	100,13	0,155	0,160	70	0,2208063
14,408	545,8	546,6	99,56	99,51	0,155	0,159	71	0,221266
14,474	545,8	546,6	101,04	99,23	0,155	0,159	72	0,2224084
14,469	545,8	546,6	98,02	98,76	0,154	0,159	73	0,2224088
14,435	545,7	546,6	100,91	99,40	0,154	0,159	74	0,2219522
14,383	545,7	546,5	99,24	99,54	0,155	0,160	75	0,2212655
14,386	545,7	546,5	99,29	99,27	0,153	0,159	76	0,2212657
14,427	545,7	546,5	100,04	99,08	0,154	0,159	77	0,2219529
14,348	545,6	546,5	99,24	99,74	0,154	0,159	78	0,2208061
14,265	545,6	546,4	99,56	99,90	0,153	0,159	79	0,2196545
14,411	545,6	546,4	101,26	99,52	0,155	0,160	80	0,2219528
14,077	545,6	546,4	103,14	101,55	0,157	0,160	81	0,2168668
14,298	545,5	546,4	101,94	99,98	0,157	0,160	82	0,2203468
14,488	545,5	546,4	98,77	98,10	0,156	0,159	83	0,2235461
14,482	545,5	546,3	97,47	97,75	0,153	0,159	84	0,2235463
14,405	545,4	546,3	100,62	99,04	0,155	0,159	85	0,2224091
14,451	545,4	546,2	97,76	98,22	0,155	0,160	86	0,2230921
14,404	545,4	546,2	100,54	98,82	0,155	0,159	87	0,2224088
14,480	545,4	546,2	98,02	98,02	0,155	0,159	88	0,2235462
14,614	545,3	546,2	98,69	97,04	0,155	0,159	89	0,2258043
14,470	545,3	546,1	97,87	97,88	0,155	0,159	90	0,2235461
14,579	545,3	546,1	99,40	98,02	0,155	0,160	91	0,2251292
14,463	545,2	546,1	100,19	98,16	0,157	0,160	92	0,2235458
14,484	545,2	546,0	100,28	98,03	0,157	0,160	93	0,224001
14,555	545,2	546,0	96,91	97,50	0,155	0,160	94	0,225129
14,303	545,1	545,9	100,99	99,24	0,155	0,160	95	0,2212657
14,455	545,1	545,9	97,89	97,82	0,155	0,159	96	0,223546
14,418	545,1	545,9	97,74	97,87	0,153	0,159	97	0,2230925
14,590	545,1	545,8	98,87	97,23	0,155	0,159	98	0,2258048
14,597	545,0	545,8	98,73	97,05	0,157	0,160	99	0,2258042
14,543	545,0	545,8	98,08	97,57	0,156	0,160	100	0,225128
14,370	545,0	545,8	99,81	98,94	0,155	0,160	101	0,2224088
14,469	545,0	545,7	97,51	97,93	0,155	0,160	102	0,2239994
14,584	545,0	545,7	96,85	97,14	0,153	0,160	103	0,2258043
14,543	545,0	545,7	99,43	97,37	0,155	0,160	104	0,2251284
14,583	545,0	545,7	96,29	96,80	0,155	0,159	105	0,2258041
14,464	544,9	545,7	97,54	97,63	0,153	0,159	106	0,2239996
14,540	544,9	545,7	99,36	97,30	0,155	0,159	107	0,2251282
14,427	544,9	545,7	97,74	98,01	0,155	0,160	108	0,2235455
14,565	544,9	545,6	98,83	97,24	0,155	0,160	109	0,225804
14,456	544,9	545,6	97,30	97,61	0,155	0,160	110	0,2239996
14,526	544,9	545,6	98,95	96,85	0,155	0,159	111	0,2251287
14,424	544,9	545,6	99,85	97,92	0,157	0,159	112	0,2235458
14,326	544,9	545,6	98,47	99,10	0,155	0,160	113	0,2219512
14,396	544,8	545,5	100,35	97,86	0,155	0,160	114	0,2230916
14,392	544,8	545,5	100,27	98,04	0,157	0,159	115	0,2230919
14,368	544,7	545,5	100,13	98,25	0,157	0,160	116	0,2228602
14,447	544,7	545,5	99,64	97,77	0,157	0,160	117	0,2239997
14,341	544,7	545,5	98,37	98,43	0,155	0,160	118	0,2224088

14,567	544,7	545,4	99,01	96,76	0,155	0,160	119	0,2258041
14,522	544,7	545,4	97,03	97,15	0,155	0,159	120	0,2251281
14,441	544,7	545,4	97,50	98,23	0,154	0,160	121	0,2239999
14,590	544,7	545,4	97,46	96,96	0,154	0,160	122	0,2262525
14,552	544,7	545,4	98,44	96,31	0,156	0,159	123	0,2258041
14,552	544,6	545,4	98,66	96,67	0,157	0,159	124	0,2258036
14,563	544,6	545,4	97,43	97,05	0,156	0,160	125	0,2258034
14,615	544,6	545,3	96,15	96,50	0,154	0,160	126	0,2267004
14,584	544,6	545,3	98,14	96,44	0,155	0,159	127	0,2262525
14,508	544,5	545,3	96,99	97,67	0,155	0,160	128	0,225128
14,333	544,6	545,3	99,89	98,47	0,155	0,160	129	0,222408
14,577	544,5	545,3	97,97	96,87	0,156	0,160	130	0,2262524
14,508	544,5	545,3	96,48	97,33	0,154	0,160	131	0,225128
14,333	544,5	545,3	100,09	98,16	0,155	0,160	132	0,2224084
14,439	544,5	545,3	98,38	97,99	0,156	0,160	133	0,2239991
14,439	544,5	545,2	97,06	98,36	0,154	0,161	134	0,2240013
14,373	544,5	545,2	98,15	98,32	0,153	0,160	135	0,2229635
14,605	544,5	545,2	98,54	96,20	0,156	0,160	136	0,2266994
14,509	544,5	545,2	99,49	96,71	0,157	0,159	137	0,2251282
14,508	544,5	545,2	97,53	96,91	0,156	0,159	138	0,2251281
14,508	544,5	545,2	96,51	97,57	0,154	0,160	139	0,2251278
14,432	544,5	545,2	99,20	97,56	0,155	0,160	140	0,2239989
14,377	544,5	545,1	97,77	98,37	0,155	0,160	141	0,223091
14,505	544,4	545,1	96,35	97,66	0,153	0,160	142	0,2251277
14,506	544,5	545,1	97,12	97,17	0,153	0,160	143	0,2251278
14,507	544,4	545,1	99,05	96,72	0,155	0,159	144	0,2251272
14,511	544,5	545,1	99,40	96,67	0,157	0,159	145	0,2251274
14,649	544,4	545,1	95,92	96,36	0,155	0,159	146	0,2273454
14,406	544,4	545,1	98,93	97,82	0,155	0,160	147	0,2235448
14,548	544,4	545,1	98,61	96,65	0,156	0,160	148	0,2258032
14,580	544,4	545,1	98,95	96,43	0,157	0,159	149	0,2262516
14,621	544,4	545,1	95,92	96,89	0,155	0,160	150	0,2268624
14,431	544,4	545,1	99,59	97,20	0,155	0,160	151	0,2239989
14,297	544,4	545,1	100,76	97,98	0,157	0,159	152	0,2219517
14,410	544,4	545,1	96,99	98,05	0,155	0,159	153	0,2235451
14,508	544,5	545,1	96,45	97,55	0,153	0,160	154	0,2251282
14,514	544,5	545,1	97,39	97,25	0,153	0,160	155	0,2251274
14,579	544,5	545,1	96,59	97,31	0,154	0,160	156	0,2262517
14,564	544,5	545,2	96,55	97,45	0,154	0,161	157	0,2258035
14,613	544,5	545,2	97,92	96,37	0,155	0,160	158	0,2267007
14,636	544,5	545,2	96,34	96,46	0,155	0,160	159	0,2269663
14,561	544,5	545,2	98,46	96,56	0,155	0,159	160	0,2258031
14,518	544,5	545,2	98,46	97,00	0,156	0,159	161	0,2251276
14,563	544,5	545,2	99,15	96,80	0,157	0,159	162	0,2258034
14,561	544,6	545,2	98,33	96,74	0,157	0,159	163	0,2258035
14,518	544,6	545,2	99,18	96,88	0,157	0,159	164	0,225128
14,614	544,5	545,2	98,05	96,58	0,157	0,159	165	0,2267005
14,311	544,5	545,2	98,00	98,93	0,155	0,160	166	0,2219516
14,562	544,5	545,2	98,77	96,93	0,155	0,160	167	0,2258079
14,624	544,5	545,2	97,76	96,47	0,156	0,160	168	0,2267008
14,669	544,5	545,2	98,33	96,09	0,156	0,159	169	0,2273708
14,522	544,5	545,2	98,95	96,59	0,157	0,159	170	0,2251277
14,622	544,5	545,2	97,57	96,53	0,156	0,159	171	0,2267003
14,519	544,5	545,2	97,60	97,31	0,155	0,160	172	0,2251283
14,618	544,5	545,2	98,56	96,37	0,156	0,160	173	0,2267003
14,561	544,5	545,2	98,64	96,53	0,157	0,159	174	0,2258032
14,620	544,5	545,2	95,90	96,54	0,155	0,159	175	0,2267268
14,666	544,5	545,2	95,63	96,31	0,153	0,160	176	0,2274471
14,564	544,5	545,2	97,06	96,82	0,153	0,160	177	0,2258029
14,587	544,5	545,2	96,52	97,29	0,154	0,160	178	0,2262519
14,517	544,5	545,2	98,80	97,58	0,155	0,160	179	0,225129
14,154	544,5	545,2	99,40	100,00	0,155	0,160	180	0,2195281

14,585	544,5	545,2	96,52	96,60	0,154	0,160	181	0,2262516
14,439	544,5	545,2	98,78	97,08	0,155	0,159	182	0,2239993
14,515	544,5	545,2	97,18	97,83	0,155	0,160	183	0,2251281
14,505	544,5	545,2	97,15	96,52	0,154	0,160	184	0,225128
14,408	544,5	545,2	97,11	97,98	0,153	0,159	185	0,2235448
14,497	544,5	545,2	96,90	97,19	0,153	0,160	186	0,2251272
14,590	544,5	545,2	98,60	96,36	0,156	0,160	187	0,2266999
14,588	544,6	545,2	98,26	95,94	0,157	0,159	188	0,2266999
14,530	544,6	545,3	99,00	96,86	0,157	0,159	189	0,2258029
14,557	544,6	545,3	96,31	96,21	0,156	0,160	190	0,2262516
14,624	544,7	545,3	96,72	95,82	0,154	0,159	191	0,2273757
14,623	544,7	545,3	96,11	95,63	0,155	0,159	192	0,2273699
14,522	544,7	545,3	98,50	96,45	0,155	0,159	193	0,2258028
14,548	544,7	545,3	96,20	96,57	0,155	0,160	194	0,2262515
14,575	544,7	545,3	96,19	96,38	0,154	0,160	195	0,2267
14,546	544,7	545,3	98,50	96,28	0,155	0,160	196	0,2262512
14,573	544,7	545,3	98,00	96,64	0,157	0,160	197	0,2267003
14,513	544,7	545,3	96,42	96,84	0,155	0,160	198	0,2258002
14,612	544,6	545,2	95,05	95,72	0,153	0,160	199	0,2273696
14,613	544,6	545,2	97,79	96,41	0,155	0,160	200	0,2273702
14,366	544,6	545,2	99,57	97,38	0,157	0,160	201	0,2235451
14,510	544,6	545,2	98,45	97,07	0,157	0,160	202	0,2258028
14,565	544,6	545,2	97,39	95,95	0,156	0,160	203	0,2266995
14,609	544,6	545,2	98,01	96,04	0,157	0,160	204	0,2273701
14,506	544,6	545,2	98,30	96,28	0,157	0,160	205	0,225803
14,564	544,6	545,2	98,06	96,73	0,157	0,160	206	0,226705
14,562	544,6	545,2	95,86	95,52	0,155	0,160	207	0,2267003
14,706	544,6	545,1	95,16	95,01	0,154	0,159	208	0,2289261
14,533	544,6	545,1	98,09	96,45	0,155	0,160	209	0,2262511
14,504	544,6	545,1	96,96	96,41	0,156	0,160	210	0,2258029
14,603	544,6	545,1	96,53	95,91	0,155	0,160	211	0,2273698
14,511	544,6	545,1	96,25	96,23	0,154	0,160	212	0,225949
14,602	544,5	545,1	95,38	95,72	0,153	0,159	213	0,2273705
14,558	544,5	545,1	97,68	96,42	0,155	0,160	214	0,2266995
14,558	544,5	545,1	96,29	95,89	0,155	0,160	215	0,2266996
14,602	544,5	545,1	98,12	96,26	0,156	0,160	216	0,2273698
14,326	544,5	545,1	99,92	98,39	0,157	0,161	217	0,2230902
14,600	544,6	545,1	95,36	95,44	0,155	0,160	218	0,2273693
14,355	544,5	545,1	99,61	97,57	0,155	0,159	219	0,2235443
14,457	544,5	545,1	96,66	96,46	0,155	0,159	220	0,225127
14,672	544,6	545,1	97,33	95,53	0,155	0,160	221	0,2284827
14,498	544,6	545,1	98,29	96,42	0,157	0,160	222	0,2258024
14,557	544,6	545,1	96,07	96,04	0,155	0,160	223	0,2266993
14,209	544,6	545,1	99,25	98,41	0,154	0,160	224	0,2212641
14,456	544,6	545,1	97,93	96,67	0,155	0,160	225	0,2251269
14,500	544,6	545,2	96,50	96,50	0,155	0,160	226	0,2258024
14,529	544,6	545,1	97,99	96,71	0,155	0,160	227	0,2262539
14,599	544,6	545,1	95,80	95,81	0,155	0,160	228	0,2273693
14,671	544,6	545,1	97,37	95,39	0,155	0,160	229	0,2284824
14,627	544,6	545,1	95,60	95,68	0,155	0,160	230	0,2278144
14,596	544,6	545,1	97,46	95,87	0,155	0,160	231	0,2273372
14,628	544,6	545,1	95,19	95,34	0,155	0,159	232	0,2278141
14,599	544,6	545,1	98,22	96,06	0,155	0,160	233	0,2273696
14,454	544,6	545,1	96,40	96,61	0,155	0,160	234	0,2251267
14,498	544,6	545,1	96,50	96,55	0,154	0,160	235	0,2258026
14,498	544,6	545,1	98,56	96,57	0,156	0,160	236	0,2258024
14,250	544,6	545,1	99,68	98,35	0,157	0,160	237	0,2219503
14,600	544,6	545,2	97,21	95,58	0,156	0,160	238	0,2273693
14,556	544,6	545,1	96,09	95,75	0,155	0,159	239	0,2266989
14,557	544,6	545,2	98,56	96,10	0,156	0,159	240	0,2266991
14,499	544,6	545,2	98,00	96,33	0,157	0,160	241	0,2258027
14,456	544,6	545,2	98,82	97,10	0,157	0,160	242	0,2251266

14,629	544,7	545,2	97,57	95,40	0,157	0,160	243	0,2278149
14,629	544,7	545,2	94,99	95,29	0,155	0,159	244	0,2278144
14,325	544,7	545,2	99,19	98,35	0,155	0,160	245	0,2230903
14,528	544,7	545,2	97,66	96,03	0,156	0,160	246	0,2262506
14,556	544,7	545,2	95,82	95,79	0,155	0,159	247	0,2266991
14,556	544,7	545,2	95,81	95,86	0,153	0,159	248	0,2266884
14,556	544,7	545,2	95,98	96,05	0,153	0,159	249	0,226699
14,556	544,7	545,2	97,76	95,81	0,155	0,159	250	0,2266989
14,455	544,7	545,2	98,49	96,74	0,157	0,159	251	0,2251269
14,456	544,7	545,2	96,82	96,72	0,155	0,160	252	0,2251267
14,499	544,7	545,2	96,17	96,78	0,154	0,160	253	0,2258021
14,456	544,7	545,2	98,72	97,01	0,155	0,160	254	0,2251262
14,671	544,7	545,2	97,67	95,48	0,157	0,160	255	0,2284823
14,498	544,7	545,2	99,00	96,75	0,158	0,160	256	0,2258024
14,556	544,7	545,2	97,73	95,41	0,157	0,159	257	0,2266988
14,557	544,7	545,3	97,10	96,72	0,156	0,160	258	0,2266988
14,456	544,7	545,3	97,91	96,18	0,156	0,160	259	0,2251269
14,557	544,7	545,2	98,01	96,20	0,156	0,159	260	0,2266994
15,462	544,7	545,3	89,84	90,52	0,155	0,160	261	0,2408071
14,499	544,7	545,3	97,06	95,90	0,154	0,159	262	0,2258017
14,727	544,8	545,3	94,84	95,24	0,154	0,159	263	0,229369
14,670	544,8	545,3	97,08	94,74	0,155	0,159	264	0,2284821
14,528	544,8	545,3	98,33	96,51	0,157	0,159	265	0,2262516
14,498	544,8	545,3	98,81	96,29	0,157	0,160	266	0,2258026
14,556	544,8	545,3	96,04	96,48	0,156	0,160	267	0,2267004
14,527	544,7	545,3	97,04	96,69	0,154	0,160	268	0,2262503
14,556	544,8	545,3	96,07	96,21	0,154	0,160	269	0,2266989
14,556	544,7	545,3	96,41	95,83	0,154	0,160	270	0,2266993
14,556	544,8	545,3	98,55	95,91	0,156	0,159	271	0,2266991
14,555	544,7	545,3	95,78	96,53	0,156	0,160	272	0,2266987
14,631	544,7	545,3	96,57	95,61	0,154	0,160	273	0,2278794
14,555	544,8	545,3	98,31	95,80	0,156	0,159	274	0,2266992
14,671	544,8	545,3	95,21	95,06	0,155	0,159	275	0,2284825
14,727	544,8	545,3	96,72	94,60	0,155	0,159	276	0,2293688
14,627	544,8	545,3	95,11	95,78	0,155	0,159	277	0,2278149
14,670	544,8	545,3	97,83	95,12	0,155	0,160	278	0,2284827
14,554	544,8	545,3	95,67	96,11	0,156	0,159	279	0,226699
14,598	544,8	545,3	95,52	95,85	0,153	0,160	280	0,2273694
14,626	544,8	545,3	96,17	95,80	0,154	0,160	281	0,2278147
14,668	544,8	545,3	94,66	95,71	0,154	0,160	282	0,2284822
14,598	544,8	545,3	95,58	96,36	0,153	0,160	283	0,2273689
14,525	544,8	545,3	96,06	96,48	0,153	0,160	284	0,2262503
14,597	544,8	545,3	98,13	95,44	0,156	0,160	285	0,2273691
14,553	544,8	545,3	97,97	95,88	0,157	0,159	286	0,226699
14,524	544,8	545,3	98,62	95,87	0,157	0,159	287	0,2262504
14,597	544,8	545,3	98,26	95,36	0,158	0,159	288	0,2273694
14,452	544,8	545,3	99,14	96,35	0,158	0,159	289	0,2251262
14,457	544,8	545,3	96,72	96,76	0,156	0,159	290	0,2252141
14,452	544,8	545,3	98,65	96,41	0,155	0,159	291	0,2251267
14,595	544,8	545,3	97,46	95,48	0,157	0,159	292	0,2273698
14,523	544,8	545,3	96,38	96,57	0,155	0,160	293	0,2262501
14,595	544,7	545,3	98,21	95,37	0,156	0,160	294	0,2273692
14,451	544,7	545,3	98,68	96,52	0,157	0,159	295	0,2251262
14,552	544,7	545,2	98,34	95,45	0,157	0,159	296	0,226699
14,667	544,7	545,2	95,35	95,61	0,156	0,159	297	0,228482
14,495	544,7	545,3	96,25	96,78	0,154	0,160	298	0,2258023
14,522	544,8	545,3	98,15	96,02	0,155	0,160	299	0,2262428
14,551	544,8	545,3	97,99	95,98	0,157	0,159	300	0,2266985
14,608	544,8	545,3	95,44	95,89	0,155	0,160	301	0,2275856
14,378	544,8	545,3	99,33	97,13	0,155	0,160	302	0,2239978
14,594	544,8	545,3	95,74	95,84	0,155	0,160	303	0,2273687
14,593	544,8	545,3	97,52	95,66	0,155	0,160	304	0,2273694

14,593	544,8	545,3	95,78	96,06	0,155	0,160	305	0,2273697
14,593	544,8	545,3	95,68	95,97	0,154	0,160	306	0,2273692
14,492	544,8	545,3	98,73	96,28	0,156	0,160	307	0,2258025
14,621	544,8	545,3	95,54	95,85	0,156	0,160	308	0,2278147
14,520	544,8	545,3	97,87	96,03	0,155	0,160	309	0,2262507
14,663	544,8	545,3	96,97	95,38	0,156	0,160	310	0,2284823
14,448	544,7	545,3	96,30	97,21	0,155	0,160	311	0,2251265
14,591	544,8	545,3	95,46	96,54	0,153	0,161	312	0,2273694
14,490	544,8	545,3	96,13	96,91	0,153	0,161	313	0,2258025
14,549	544,8	545,3	96,15	95,70	0,154	0,160	314	0,2267083
14,590	544,8	545,3	97,57	95,95	0,155	0,160	315	0,2273689
15,235	544,8	545,3	93,56	91,57	0,157	0,160	316	0,2374194
14,345	544,8	545,3	99,51	97,31	0,157	0,159	317	0,2235439
14,518	544,8	545,3	98,57	96,08	0,157	0,159	318	0,22625
14,617	544,8	545,3	95,01	95,72	0,155	0,160	319	0,2278143
14,314	544,8	545,3	97,29	97,85	0,153	0,160	320	0,2230898
14,518	544,8	545,3	97,01	95,76	0,154	0,159	321	0,2262505

Tunnel	Temp.	Temp.	98,55	97,05	System 1	System 2		SQRT
Velocity	Meter 1	Meter 2	**Proportional Rates**		Vol.Std.	Vol.Std.		Delta-P
			PR1	**PR2**			Time	
Ft/Sec	Deg. R	Deg. R	**%**	**%**	(ft3)	(ft3)	min	(in H2O)2
14,721	543,0	543,8			0,153	0,156	0	0,2175613
14,874	543,0	543,8	106,07	104,25	0,153	0,156	1	0,2191859
14,937	543,1	543,8	109,12	106,29	0,153	0,156	2	0,2175599
14,991	543,2	543,9	112,67	109,01	0,155	0,156	3	0,2156874
15,006	543,5	544,0	111,60	109,70	0,155	0,157	4	0,2152159
14,927	543,7	544,3	110,16	108,54	0,153	0,157	5	0,2155994
14,951	544,0	544,5	109,36	108,21	0,153	0,157	6	0,2163921
14,980	544,2	544,7	111,02	107,16	0,154	0,156	7	0,2168595
15,029	544,3	544,9	108,74	106,32	0,154	0,156	8	0,2180256
14,757	544,5	545,1	108,32	107,09	0,153	0,156	9	0,2156876
14,710	544,6	545,2	108,07	107,01	0,152	0,157	10	0,2156877
14,483	544,7	545,3	109,68	108,30	0,152	0,157	11	0,2123697
14,924	544,7	545,4	107,08	104,48	0,153	0,156	12	0,2191823
14,754	544,8	545,4	109,38	105,16	0,154	0,156	13	0,2168601
14,861	544,8	545,5	104,50	104,07	0,153	0,156	14	0,2196486
15,351	544,8	545,5	102,54	98,74	0,153	0,156	15	0,2280759
14,786	544,9	545,5	105,54	102,00	0,155	0,155	16	0,220341
15,650	544,9	545,6	97,18	96,44	0,153	0,156	17	0,2337472
14,675	544,9	545,7	105,61	102,02	0,153	0,156	18	0,2196492
14,575	545,0	545,7	105,76	103,47	0,154	0,156	19	0,218027
14,676	545,0	545,7	105,15	102,65	0,154	0,156	20	0,2196491
15,248	545,0	545,7	98,84	98,55	0,152	0,156	21	0,2284789
14,693	545,0	545,7	105,42	101,46	0,153	0,156	22	0,2203942
14,756	545,1	545,8	102,13	101,26	0,153	0,156	23	0,2212604
14,620	545,1	545,8	102,65	102,31	0,151	0,156	24	0,2191881
14,750	545,1	545,8	103,44	101,40	0,152	0,156	25	0,221261
14,799	545,1	545,8	102,55	100,79	0,152	0,156	26	0,2219478
14,524	545,2	545,9	106,08	102,35	0,153	0,155	27	0,2180276
14,871	545,2	545,9	101,25	101,02	0,153	0,156	28	0,2230875
14,786	545,2	545,9	102,50	100,62	0,151	0,156	29	0,221948
14,883	545,2	545,9	102,89	99,96	0,153	0,155	30	0,2235419
14,681	545,2	545,9	105,05	101,57	0,154	0,156	31	0,2203422
14,817	545,2	546,0	104,05	100,63	0,155	0,156	32	0,2224041
14,713	545,3	546,0	104,58	101,53	0,155	0,156	33	0,2208008
14,893	545,3	546,0	100,82	100,86	0,152	0,156	34	0,2235416
14,642	545,3	546,1	103,61	101,78	0,152	0,157	35	0,2203422
14,685	545,3	546,1	101,13	100,93	0,152	0,156	36	0,2212618
14,846	545,3	546,1	102,06	99,89	0,152	0,156	37	0,2238942
14,744	545,4	546,1	101,40	100,87	0,152	0,157	38	0,2224041
14,765	545,3	546,1	102,63	99,68	0,153	0,156	39	0,2227806
14,633	545,3	546,1	101,12	101,25	0,152	0,156	40	0,2208024
14,836	545,3	546,1	102,31	99,44	0,152	0,156	41	0,2239962
14,822	545,3	546,0	101,96	98,80	0,154	0,155	42	0,223996
14,883	545,2	546,0	98,56	98,77	0,152	0,155	43	0,2251255
14,662	545,2	546,0	102,99	99,90	0,152	0,156	44	0,2219494
14,495	545,2	546,0	103,53	100,76	0,154	0,155	45	0,2196514
14,635	545,2	546,0	100,78	99,41	0,152	0,155	46	0,2219488
14,657	545,1	545,9	101,94	99,62	0,152	0,155	47	0,2224053
14,825	545,0	545,8	98,66	98,45	0,152	0,156	48	0,2251255
14,638	545,0	545,8	102,05	99,11	0,152	0,156	49	0,2224055
14,807	544,9	545,7	98,93	98,92	0,152	0,156	50	0,2251257
14,406	544,9	545,7	101,15	100,72	0,151	0,156	51	0,2191898
14,965	544,9	545,7	99,41	97,02	0,152	0,156	52	0,2278138
14,824	544,9	545,8	100,09	97,70	0,153	0,156	53	0,2258015
14,774	544,9	545,7	100,00	98,73	0,153	0,156	54	0,225126
14,633	544,9	545,7	99,11	98,38	0,151	0,156	55	0,2230767
14,657	544,9	545,7	99,16	98,19	0,150	0,155	56	0,2235432
14,685	544,8	545,6	98,56	98,40	0,150	0,155	57	0,2239969
14,752	544,7	545,5	98,69	97,68	0,150	0,156	58	0,225126
14,542	544,6	545,4	101,51	100,06	0,152	0,156	59	0,2219491
14,558	544,6	545,3	101,47	99,33	0,153	0,157	60	0,2224052
14,654	544,5	545,3	99,34	98,65	0,153	0,156	61	0,2239968
15,356	544,5	545,2	93,98	93,47	0,151	0,156	62	0,2348322
15,548	544,4	545,2	94,99	93,17	0,152	0,156	63	0,2378386
14,927	544,4	545,1	98,72	96,92	0,154	0,157	64	0,228483

14,382	544,4	545,1	103,09	99,86	0,154	0,156	65	0,2200121
15,536	544,4	545,1	92,22	92,26	0,152	0,156	66	0,2378385
14,505	544,3	545,1	101,48	98,96	0,152	0,156	67	0,2219497
14,634	544,3	545,0	101,28	98,31	0,154	0,156	68	0,2239998
14,426	544,3	545,0	102,00	99,93	0,154	0,156	69	0,2208031
14,497	544,3	545,0	100,83	98,79	0,153	0,156	70	0,2219491
14,849	544,3	544,9	96,77	96,53	0,151	0,156	71	0,2273682
14,699	544,2	544,9	98,47	97,70	0,151	0,156	72	0,2251253
14,700	544,2	544,9	100,45	98,15	0,153	0,156	73	0,2251254
14,697	544,2	544,8	97,56	97,21	0,152	0,156	74	0,2251253
14,743	544,1	544,8	97,03	97,05	0,150	0,155	75	0,2258009
14,771	544,1	544,8	97,55	97,24	0,150	0,156	76	0,2262492
14,691	544,1	544,8	100,20	98,22	0,152	0,157	77	0,2251252
14,483	544,1	544,7	98,94	98,71	0,152	0,156	78	0,2219489
14,554	544,1	544,7	100,80	98,73	0,152	0,156	79	0,2230885
14,787	544,1	544,7	96,98	96,58	0,152	0,156	80	0,2266976
14,730	544,0	544,7	99,09	97,40	0,151	0,156	81	0,2258009
14,787	544,0	544,7	99,52	97,54	0,153	0,157	82	0,2266976
15,130	544,0	544,7	96,95	95,00	0,154	0,157	83	0,2320027
15,646	544,0	544,6	94,13	91,96	0,154	0,157	84	0,2399612
15,604	544,0	544,6	94,09	92,05	0,154	0,157	85	0,2393264
15,479	543,9	544,6	92,70	92,44	0,152	0,156	86	0,2374111
14,684	543,9	544,6	99,69	97,54	0,152	0,156	87	0,225125
14,610	543,9	544,6	100,45	98,42	0,153	0,156	88	0,2239965
14,784	543,9	544,6	96,89	96,72	0,152	0,156	89	0,2266984
14,681	543,9	544,6	99,83	98,19	0,152	0,156	90	0,2251251
14,787	543,9	544,6	99,31	97,02	0,154	0,157	91	0,2266973
14,784	543,9	544,6	99,47	97,40	0,154	0,157	92	0,2266977
14,608	543,9	544,6	98,35	98,13	0,152	0,157	93	0,2239965
14,547	543,9	544,5	98,60	98,38	0,150	0,156	94	0,2230885
14,827	543,9	544,5	96,59	96,52	0,150	0,156	95	0,2273677
14,778	543,8	544,5	99,45	97,37	0,152	0,156	96	0,2266973
14,675	543,8	544,4	99,12	97,53	0,153	0,157	97	0,2251247
14,821	543,7	544,4	96,73	96,09	0,151	0,156	98	0,2273677
14,674	543,8	544,4	97,79	97,90	0,150	0,156	99	0,2251242
15,407	543,8	544,4	93,24	92,98	0,151	0,157	100	0,2364081
15,496	543,8	544,4	94,42	92,45	0,152	0,156	101	0,2378373
14,599	543,8	544,5	98,39	98,10	0,152	0,156	102	0,2239953
14,670	543,8	544,4	97,31	97,32	0,150	0,156	103	0,2251247
14,494	543,8	544,4	99,28	98,41	0,150	0,156	104	0,2224044
14,770	543,8	544,4	99,27	96,99	0,152	0,156	105	0,2266968
14,492	543,8	544,4	101,43	99,04	0,154	0,157	106	0,2224041
14,564	543,7	544,4	100,48	98,13	0,154	0,156	107	0,2235426
14,742	543,7	544,3	97,27	96,96	0,152	0,156	108	0,2262486
14,565	543,7	544,3	98,86	98,35	0,151	0,156	109	0,2235421
14,769	543,7	544,3	99,79	97,23	0,153	0,157	110	0,226697
14,710	543,7	544,3	97,34	97,16	0,152	0,156	111	0,2258005
14,771	543,7	544,3	97,57	97,30	0,151	0,156	112	0,2266971
14,596	543,7	544,3	98,93	97,48	0,151	0,156	113	0,2239957
14,536	543,7	544,3	99,91	99,23	0,152	0,156	114	0,2230882
14,817	543,7	544,3	99,21	96,80	0,153	0,157	115	0,2273668
14,671	543,7	544,3	99,21	97,08	0,153	0,156	116	0,225124
14,671	543,7	544,3	99,56	97,11	0,153	0,155	117	0,2251243
14,672	543,6	544,2	99,32	96,96	0,153	0,155	118	0,225124
14,714	543,6	544,2	97,69	97,69	0,152	0,156	119	0,2257993
14,841	543,6	544,2	96,92	96,77	0,151	0,157	120	0,2277265
14,817	543,6	544,2	97,06	96,44	0,151	0,156	121	0,2273671
14,673	543,5	544,2	99,64	97,75	0,152	0,156	122	0,2251241
14,847	543,5	544,1	98,44	96,71	0,153	0,157	123	0,2278118
14,715	543,5	544,1	99,56	97,49	0,153	0,157	124	0,2257334
14,721	543,5	544,1	97,82	97,04	0,152	0,156	125	0,2257998
14,609	543,5	544,1	100,57	98,39	0,152	0,156	126	0,2239949
15,248	543,5	544,1	94,49	94,28	0,152	0,157	127	0,2337631
14,689	543,5	544,1	99,83	97,28	0,152	0,156	128	0,2251236
14,516	543,5	544,1	99,35	99,08	0,152	0,156	129	0,2224042
14,740	543,5	544,1	98,88	97,78	0,152	0,157	130	0,2257994
14,620	543,5	544,1	98,05	98,34	0,151	0,157	131	0,2239949
14,759	543,5	544,1	99,64	97,11	0,152	0,156	132	0,2262481
14,577	543,5	544,1	98,57	98,52	0,152	0,156	133	0,223541

14,750	543,6	544,2	97,21	97,27	0,150	0,156	134	0,2262476
14,772	543,6	544,2	98,59	96,76	0,151	0,156	135	0,2266963
15,254	543,6	544,1	93,89	93,99	0,152	0,156	136	0,234181
14,834	543,6	544,1	99,05	95,87	0,152	0,156	137	0,2278121
14,699	543,6	544,2	98,69	97,48	0,153	0,156	138	0,2257997
14,652	543,6	544,2	100,33	97,54	0,153	0,157	139	0,2251245
14,554	543,7	544,2	100,80	98,03	0,154	0,156	140	0,2237172
14,641	543,7	544,2	97,25	97,46	0,152	0,156	141	0,2251241
14,462	543,6	544,2	100,96	98,03	0,152	0,156	142	0,222404
14,809	543,6	544,2	98,18	95,97	0,154	0,156	143	0,2278125
14,691	543,6	544,2	98,80	96,64	0,153	0,156	144	0,2260677
14,675	543,6	544,2	99,82	96,54	0,154	0,156	145	0,2257999
15,215	543,6	544,2	95,74	93,55	0,154	0,156	146	0,234182
15,706	543,6	544,1	93,05	90,42	0,154	0,156	147	0,241856
14,665	543,6	544,1	97,30	97,19	0,152	0,156	148	0,2258008
14,867	543,6	544,1	97,55	95,35	0,152	0,156	149	0,2289234
14,744	543,6	544,1	99,06	96,05	0,154	0,156	150	0,2270399
14,544	543,5	544,1	101,08	97,45	0,155	0,156	151	0,2239951
14,615	543,5	544,1	97,75	97,53	0,153	0,156	152	0,2251245
14,656	543,4	544,0	97,08	97,45	0,151	0,157	153	0,2257996
14,830	543,4	544,0	97,77	96,24	0,152	0,157	154	0,2284797
14,924	543,4	543,9	97,56	95,09	0,154	0,157	155	0,2300282
14,428	543,4	544,0	98,86	98,39	0,152	0,156	156	0,2224005
14,607	543,4	544,0	98,69	97,50	0,152	0,157	157	0,2251241
14,648	543,4	543,9	97,45	97,13	0,152	0,157	158	0,225799
14,779	543,4	543,9	98,55	95,92	0,153	0,156	159	0,2278117
14,849	543,4	543,9	98,65	95,22	0,155	0,156	160	0,2289224
14,774	543,3	543,9	96,89	96,15	0,153	0,156	161	0,227813
14,742	543,3	543,9	96,15	96,42	0,151	0,157	162	0,2273667
14,699	543,4	543,9	98,04	96,87	0,151	0,157	163	0,2266965
14,572	543,4	543,9	97,71	97,79	0,152	0,157	164	0,2247395
15,553	543,3	543,9	93,77	90,45	0,153	0,156	165	0,2399599
14,695	543,3	543,8	98,94	96,20	0,154	0,156	166	0,226697
14,696	543,3	543,8	96,43	96,86	0,152	0,156	167	0,2266962
14,840	543,2	543,8	95,47	95,79	0,150	0,157	168	0,2289222
14,694	543,2	543,8	99,38	96,04	0,152	0,156	169	0,2266958
14,593	543,2	543,8	98,70	96,91	0,154	0,156	170	0,2251234
14,837	543,2	543,7	97,68	95,52	0,153	0,156	171	0,2289223
14,737	543,2	543,7	98,74	95,69	0,154	0,156	172	0,2273667
14,589	543,2	543,7	99,79	97,03	0,154	0,156	173	0,2251232
14,634	543,1	543,7	97,31	97,38	0,153	0,157	174	0,2257989
15,243	543,1	543,7	94,19	92,86	0,152	0,157	175	0,2352623
15,272	543,1	543,6	95,65	92,69	0,154	0,156	176	0,2356925
14,802	543,0	543,6	98,60	95,49	0,155	0,156	177	0,2284635
14,805	543,0	543,5	96,61	96,05	0,153	0,157	178	0,2284788
14,688	543,0	543,5	97,00	96,87	0,151	0,157	179	0,2266959
14,689	542,9	543,5	98,73	96,03	0,153	0,156	180	0,2267383
14,627	542,9	543,5	99,27	96,26	0,154	0,156	181	0,2257992
14,729	542,9	543,4	98,62	96,48	0,154	0,156	182	0,2273666
14,685	542,9	543,4	98,67	95,74	0,154	0,156	183	0,2266956
14,684	542,9	543,4	98,91	96,08	0,154	0,156	184	0,2266961
14,728	542,9	543,4	96,49	96,26	0,152	0,156	185	0,2273663
14,478	542,9	543,4	98,31	98,48	0,151	0,157	186	0,2235407
14,799	542,9	543,4	98,07	95,40	0,153	0,157	187	0,2284792
15,143	542,9	543,4	96,77	93,27	0,155	0,156	188	0,2338645
14,754	542,9	543,4	96,65	96,00	0,154	0,156	189	0,2278113
14,653	542,9	543,4	99,26	96,81	0,153	0,157	190	0,2262473
14,683	543,0	543,4	99,09	96,81	0,154	0,157	191	0,2266948
14,622	542,9	543,4	99,34	96,71	0,154	0,157	192	0,225799
14,474	542,9	543,4	97,98	98,01	0,152	0,157	193	0,2235408
14,679	542,9	543,4	96,27	96,72	0,150	0,157	194	0,226696
14,723	542,9	543,4	95,83	96,17	0,150	0,157	195	0,2273661
14,722	542,9	543,3	96,59	96,54	0,150	0,157	196	0,2273656
14,794	542,9	543,3	98,37	95,50	0,153	0,157	197	0,2284793
14,795	542,9	543,3	98,55	95,44	0,155	0,156	198	0,228479
14,650	542,9	543,3	98,22	97,11	0,154	0,157	199	0,2262469
14,504	542,9	543,3	97,86	97,57	0,152	0,157	200	0,2240019
14,722	542,8	543,3	96,78	96,00	0,151	0,156	201	0,2273518
14,679	542,8	543,3	97,18	95,93	0,151	0,156	202	0,2266957

15,590	542,8	543,3	93,49	90,73	0,153	0,156	203	0,2408038
14,504	542,8	543,3	98,73	98,02	0,153	0,157	204	0,2240109
14,722	542,8	543,3	96,25	96,47	0,151	0,157	205	0,2273661
15,033	542,8	543,3	94,66	94,33	0,151	0,157	206	0,2322371
14,575	542,8	543,2	99,73	97,10	0,153	0,157	207	0,2251229
14,779	542,8	543,2	98,63	96,03	0,155	0,157	208	0,22826
14,648	542,8	543,2	98,02	96,02	0,154	0,156	209	0,2262469
14,649	542,8	543,2	97,28	96,60	0,152	0,156	210	0,2262465
14,850	542,8	543,2	95,31	95,37	0,151	0,156	211	0,2293657
14,502	542,8	543,2	99,34	97,45	0,152	0,156	212	0,223994
14,401	542,8	543,2	98,91	98,09	0,152	0,156	213	0,2224311
14,749	542,8	543,3	95,82	95,94	0,151	0,156	214	0,227811
14,618	542,8	543,3	98,22	96,74	0,151	0,156	215	0,2257983
14,618	542,8	543,2	97,25	96,70	0,152	0,156	216	0,2257991
14,849	542,8	543,3	96,06	94,75	0,151	0,156	217	0,229365
14,501	542,8	543,2	98,58	98,05	0,152	0,156	218	0,2239948
14,746	542,8	543,2	98,69	96,63	0,153	0,157	219	0,2278113
14,616	542,8	543,2	99,91	96,79	0,155	0,157	220	0,2257988
14,674	542,8	543,2	97,94	96,61	0,154	0,157	221	0,2266955
14,572	542,8	543,2	97,22	97,60	0,152	0,157	222	0,2251233
14,792	542,8	543,2	96,32	95,28	0,151	0,157	223	0,2284779
14,501	542,8	543,2	98,49	97,43	0,152	0,156	224	0,2239942
15,529	542,8	543,2	92,44	91,30	0,152	0,157	225	0,2399588
14,499	542,8	543,2	98,08	97,28	0,152	0,156	226	0,2239941
15,088	542,8	543,2	95,44	94,06	0,152	0,156	227	0,2330943
14,843	542,8	543,2	95,70	94,88	0,152	0,156	228	0,2293745
14,787	542,8	543,2	96,35	95,62	0,151	0,156	229	0,2284789
15,393	542,8	543,2	92,62	91,64	0,152	0,156	230	0,2378354
15,650	542,8	543,2	92,44	90,65	0,153	0,157	231	0,2418553
14,570	542,8	543,2	99,32	97,44	0,154	0,157	232	0,2251232
14,784	542,8	543,2	95,89	95,49	0,152	0,157	233	0,2284762
14,612	542,8	543,2	99,33	97,02	0,153	0,157	234	0,2257986
14,570	542,8	543,2	99,76	97,19	0,154	0,157	235	0,2251206
15,624	542,8	543,2	92,76	90,66	0,154	0,157	236	0,241436
15,527	542,8	543,2	91,64	90,82	0,153	0,156	237	0,2399644
15,526	542,8	543,2	91,66	90,96	0,151	0,156	238	0,23996
15,528	542,8	543,2	91,53	90,74	0,151	0,156	239	0,2400117
15,580	542,8	543,2	91,29	90,59	0,151	0,156	240	0,2408036
14,566	542,8	543,3	99,30	97,40	0,153	0,157	241	0,225124
14,781	542,8	543,3	95,76	95,59	0,152	0,157	242	0,2284789
14,780	542,9	543,3	96,06	95,55	0,151	0,156	243	0,228479
14,635	542,9	543,3	97,09	96,55	0,151	0,156	244	0,2262469
14,809	542,9	543,3	98,14	96,07	0,153	0,157	245	0,228922
15,613	542,9	543,3	91,00	90,34	0,153	0,157	246	0,2413862
15,617	542,9	543,3	92,88	90,65	0,153	0,157	247	0,2414363
15,643	543,0	543,4	91,86	90,47	0,154	0,157	248	0,2418556
14,779	543,0	543,4	96,20	95,17	0,152	0,156	249	0,2284793
14,663	543,0	543,4	96,93	96,42	0,151	0,156	250	0,2266961
14,662	542,9	543,4	96,49	96,00	0,151	0,156	251	0,2266951
14,806	542,9	543,3	96,11	95,20	0,151	0,156	252	0,2289222
15,516	542,9	543,4	93,48	91,51	0,153	0,157	253	0,2399468
14,703	542,9	543,4	98,78	96,28	0,155	0,157	254	0,2273662
14,733	542,9	543,4	96,98	95,40	0,153	0,156	255	0,2278117
14,777	543,0	543,4	98,52	95,85	0,154	0,156	256	0,2284799
14,632	543,0	543,4	96,38	96,23	0,153	0,156	257	0,2262472
14,805	543,0	543,4	95,94	95,43	0,151	0,156	258	0,2289225
14,776	543,0	543,5	97,68	96,25	0,152	0,157	259	0,2284788
14,832	543,1	543,5	96,42	95,37	0,153	0,157	260	0,2293659
14,702	543,1	543,5	98,63	95,87	0,153	0,156	261	0,2273667
14,629	543,1	543,5	96,54	96,56	0,152	0,156	262	0,226248
14,730	543,1	543,5	96,20	95,57	0,151	0,156	263	0,2278117
14,701	543,1	543,5	96,39	95,79	0,151	0,156	264	0,2273669
14,802	543,1	543,5	95,32	95,13	0,151	0,156	265	0,2289227
14,557	543,0	543,5	99,53	96,82	0,152	0,156	266	0,2251236
15,044	543,0	543,5	96,71	94,09	0,155	0,157	267	0,2326595
14,593	543,0	543,5	99,19	97,00	0,155	0,157	268	0,2256856
14,802	543,0	543,4	96,33	95,58	0,153	0,157	269	0,2289227
14,599	543,0	543,4	99,40	96,76	0,153	0,157	270	0,2257991
14,482	543,0	543,4	100,11	97,09	0,155	0,156	271	0,2239949

14,672	543,0	543,4	98,80	96,59	0,154	0,157	272	0,2269375
14,657	543,0	543,4	98,86	96,26	0,154	0,157	273	0,2266959
14,655	543,0	543,4	98,80	96,07	0,154	0,156	274	0,2266958
15,110	543,0	543,4	95,59	93,70	0,154	0,157	275	0,2337478
15,566	543,0	543,4	91,04	90,44	0,152	0,157	276	0,2408046
15,376	543,0	543,4	94,24	92,18	0,153	0,157	277	0,2378451
14,598	543,0	543,4	98,04	96,91	0,153	0,157	278	0,2257998
14,698	543,0	543,4	98,83	96,01	0,154	0,157	279	0,2273663
14,697	543,0	543,4	98,56	96,20	0,155	0,157	280	0,2273667
14,775	543,0	543,4	95,68	95,65	0,153	0,157	281	0,2285625
14,727	543,0	543,4	96,01	96,15	0,151	0,157	282	0,2278116
14,624	543,0	543,4	99,15	96,24	0,153	0,157	283	0,2262484
14,624	543,0	543,4	96,80	97,13	0,153	0,157	284	0,226248
14,696	543,0	543,4	98,66	95,94	0,153	0,157	285	0,2273665
14,652	543,0	543,4	98,87	95,75	0,154	0,156	286	0,2267015
14,621	543,0	543,4	98,77	96,72	0,154	0,156	287	0,2262478
14,550	543,0	543,4	96,80	96,97	0,152	0,157	288	0,2251236
14,766	543,0	543,4	98,29	95,45	0,152	0,156	289	0,2284789
14,650	543,0	543,4	97,14	95,93	0,153	0,156	290	0,2267012
14,721	543,0	543,4	97,76	95,59	0,153	0,156	291	0,2278114
14,723	543,0	543,4	98,25	95,62	0,154	0,156	292	0,2278118
14,794	543,0	543,5	96,39	95,24	0,153	0,156	293	0,2289229
14,694	543,0	543,4	96,43	96,57	0,152	0,157	294	0,2273663
14,692	543,0	543,4	96,87	95,48	0,151	0,157	295	0,2273665
14,693	543,0	543,4	96,37	95,77	0,151	0,156	296	0,2273663
14,691	543,0	543,4	98,19	95,73	0,152	0,156	297	0,2273664
14,649	543,0	543,4	96,50	96,28	0,152	0,156	298	0,2266959
14,647	543,0	543,4	97,66	96,29	0,152	0,157	299	0,226696
14,590	542,9	543,4	97,22	96,57	0,152	0,156	300	0,2257993
14,720	542,9	543,4	95,57	96,29	0,151	0,157	301	0,2278117
15,299	543,0	543,4	92,78	92,38	0,151	0,157	302	0,2367665
14,618	542,9	543,4	98,14	96,76	0,152	0,157	303	0,2262473
14,647	542,9	543,4	99,17	95,64	0,154	0,156	304	0,2266964
14,720	542,9	543,4	95,55	96,10	0,152	0,156	305	0,2278116
14,370	542,9	543,3	100,74	98,05	0,152	0,157	306	0,2224041
14,647	542,9	543,4	96,52	96,67	0,153	0,157	307	0,2266966
14,546	542,9	543,4	99,55	96,67	0,153	0,157	308	0,2251236
14,723	542,9	543,4	96,03	95,90	0,153	0,156	309	0,2278693
14,619	542,9	543,4	96,43	97,05	0,151	0,157	310	0,2262474
14,690	542,9	543,4	96,16	96,74	0,151	0,158	311	0,2273661
14,545	542,9	543,4	99,05	96,84	0,152	0,157	312	0,225124
14,589	542,9	543,3	96,84	96,53	0,152	0,156	313	0,2257996
14,413	542,9	543,3	100,42	97,63	0,153	0,156	314	0,2230874
14,717	542,9	543,3	96,37	96,24	0,153	0,157	315	0,2277849
14,761	542,9	543,3	96,46	95,39	0,152	0,157	316	0,2284791
14,646	542,9	543,4	99,25	96,22	0,153	0,156	317	0,2266959
14,617	542,9	543,4	97,26	96,41	0,153	0,156	318	0,2262476
14,617	542,9	543,4	96,32	96,90	0,151	0,157	319	0,2262477
14,761	542,9	543,4	98,41	95,21	0,153	0,157	320	0,2284794
14,646	542,9	543,4	98,82	96,09	0,155	0,156	321	0,2266958
14,719	542,9	543,4	96,40	96,00	0,153	0,157	322	0,227812
15,365	542,9	543,4	94,11	91,20	0,153	0,156	323	0,2378364
14,688	543,0	543,4	95,84	96,16	0,152	0,156	324	0,2273667
14,861	543,0	543,4	97,29	95,07	0,152	0,157	325	0,2300289
14,729	543,0	543,5	96,77	95,68	0,153	0,157	326	0,227976
14,718	543,0	543,5	97,12	95,62	0,152	0,156	327	0,2278121
14,681	543,0	543,4	98,31	95,55	0,153	0,156	328	0,2272434
14,760	543,0	543,4	95,54	95,71	0,152	0,156	329	0,2284793
14,760	543,0	543,4	97,97	95,30	0,152	0,157	330	0,2284799
14,619	543,0	543,4	98,70	96,50	0,154	0,156	331	0,2262733
14,752	543,0	543,4	98,41	95,54	0,154	0,157	332	0,2283563
14,790	543,0	543,4	97,41	95,46	0,154	0,157	333	0,2289225
14,689	542,9	543,4	96,15	96,26	0,152	0,157	334	0,2273668
14,689	542,9	543,4	98,16	96,37	0,152	0,157	335	0,2273665
14,761	542,9	543,4	97,71	95,54	0,154	0,157	336	0,228479
14,689	542,9	543,4	98,54	95,73	0,154	0,156	337	0,2273664
14,588	542,9	543,4	98,39	96,13	0,154	0,156	338	0,225799
14,718	542,9	543,4	96,48	95,30	0,152	0,156	339	0,2278116
15,529	542,9	543,4	93,42	90,62	0,153	0,156	340	0,2403833

	Outlet	Outlet	Average	Average	#1	#2		
Tunnel	Temp.	Temp.	98,74	98,48	System 1	System 2		SQRT
Velocity	Meter 1	Meter 2	**Proportional Rates**		Vol.Std.	Vol.Std.		Delta-P
			PR1	**PR2**			Time	
Ft/Sec	Deg. R	Deg. R	**%**	**%**	(ft3)	(ft3)	min	(in H2O)2
15,058	545,7	546,8			0,112	0,156	0	0,2208102
14,922	545,6	546,7	106,81	114,67	0,127	0,157	1	0,2164015
15,102	545,6	546,8	116,25	114,47	0,147	0,156	2	0,2168701
14,927	545,7	546,9	119,02	116,93	0,154	0,156	3	0,2140448
15,154	546,0	547,1	117,27	113,99	0,155	0,156	4	0,2180361
14,940	546,1	547,2	115,07	114,96	0,154	0,156	5	0,2164024
14,753	546,3	547,4	115,83	115,16	0,153	0,157	6	0,2145198
14,789	546,4	547,5	115,48	113,81	0,153	0,156	7	0,215698
14,851	546,5	547,6	114,58	113,59	0,153	0,156	8	0,2164028
14,886	546,6	547,7	115,72	113,52	0,154	0,156	9	0,2168711
14,853	546,6	547,8	114,92	112,28	0,155	0,156	10	0,2175716
14,982	546,6	547,8	113,69	110,38	0,155	0,156	11	0,2203515
14,726	546,6	547,8	114,15	112,13	0,155	0,156	12	0,2168707
14,990	546,6	547,9	110,95	110,18	0,153	0,156	13	0,2208109
14,906	546,7	547,9	109,91	109,75	0,152	0,156	14	0,2203518
14,834	546,7	548,0	109,10	110,08	0,151	0,156	15	0,2203518
14,755	546,6	547,9	109,24	109,74	0,151	0,157	16	0,21966
14,784	546,6	547,9	111,63	109,17	0,153	0,156	17	0,220352
14,913	546,6	547,9	108,95	108,04	0,154	0,156	18	0,2223917
14,867	546,6	547,9	107,78	109,06	0,152	0,157	19	0,2219583
14,849	546,6	547,9	109,79	107,51	0,152	0,157	20	0,2219582
14,788	546,5	547,9	107,73	108,17	0,152	0,156	21	0,2212713
14,854	546,5	547,8	110,07	107,41	0,153	0,156	22	0,2224143
15,675	546,4	547,8	101,15	102,18	0,153	0,157	23	0,2352741
14,798	546,4	547,8	107,16	107,77	0,151	0,157	24	0,221958
14,838	546,4	547,8	109,06	106,89	0,152	0,156	25	0,2224143
14,884	546,4	547,8	106,47	107,35	0,152	0,156	26	0,2230979
14,697	546,5	547,8	107,32	108,83	0,150	0,157	27	0,2203528
14,868	546,5	547,8	106,50	106,77	0,150	0,156	28	0,2230984
15,505	546,5	547,8	103,28	102,57	0,152	0,156	29	0,2331065
15,739	546,5	547,8	99,29	100,41	0,152	0,157	30	0,2374204
14,726	546,5	547,8	109,17	106,98	0,152	0,156	31	0,2219582
15,622	546,5	547,7	102,75	101,09	0,154	0,156	32	0,2357043
14,818	546,5	547,7	105,53	106,30	0,152	0,157	33	0,2235522
14,790	546,5	547,6	107,78	106,67	0,152	0,156	34	0,2230978
14,661	546,5	547,6	108,65	107,18	0,153	0,156	35	0,2212713
14,732	546,4	547,5	108,01	107,10	0,153	0,156	36	0,2224142
14,795	546,4	547,5	107,67	106,57	0,154	0,157	37	0,223552
14,756	546,4	547,5	108,05	106,61	0,154	0,157	38	0,2230978
14,755	546,4	547,4	107,89	106,53	0,154	0,157	39	0,2230974
14,764	546,4	547,4	104,58	106,15	0,152	0,157	40	0,223552
14,897	546,4	547,4	103,67	104,73	0,150	0,156	41	0,2258109
14,744	546,4	547,4	104,76	106,18	0,150	0,157	42	0,2235517
14,765	546,4	547,4	104,41	105,81	0,150	0,157	43	0,2240054
14,722	546,4	547,3	106,07	106,20	0,151	0,157	44	0,2235516
14,736	546,4	547,3	106,64	106,00	0,153	0,157	45	0,224005
14,512	546,4	547,3	108,23	106,86	0,154	0,157	46	0,2208112
14,531	546,3	547,2	106,75	106,08	0,153	0,156	47	0,2212713
14,622	546,3	547,2	104,67	105,74	0,151	0,156	48	0,222883
14,832	546,2	547,2	105,19	104,49	0,152	0,157	49	0,226258
14,571	546,2	547,1	107,17	105,71	0,154	0,157	50	0,2224137
14,662	546,2	547,1	106,36	104,81	0,154	0,156	51	0,2240055
14,592	546,1	547,0	106,60	105,12	0,154	0,156	52	0,2230973
14,711	546,0	546,9	105,77	105,07	0,154	0,157	53	0,2251334
14,751	546,0	546,9	104,08	104,29	0,153	0,157	54	0,2258088
14,737	545,9	546,8	102,78	103,56	0,151	0,157	55	0,2258097
15,319	545,9	546,7	101,18	100,44	0,152	0,157	56	0,2348399

15,204	545,8	546,7	101,81	100,96	0,154	0,157	57	0,233105
15,665	545,7	546,6	95,99	97,16	0,152	0,157	58	0,2403933
15,554	545,7	546,6	97,10	97,81	0,150	0,156	59	0,2389111
14,802	545,7	546,5	104,34	103,40	0,152	0,157	60	0,2273764
15,277	545,6	546,5	99,97	99,47	0,153	0,157	61	0,2348397
14,795	545,5	546,4	104,63	103,31	0,154	0,157	62	0,2275428
14,808	545,5	546,3	101,18	101,86	0,152	0,157	63	0,2278214
14,805	545,4	546,3	101,78	102,32	0,150	0,156	64	0,2278209
14,876	545,4	546,2	100,53	101,92	0,150	0,156	65	0,2289312
15,323	545,4	546,2	100,11	99,22	0,152	0,157	66	0,2360337
15,570	545,3	546,1	99,00	97,79	0,154	0,157	67	0,2399696
15,624	545,2	546,1	98,54	97,49	0,155	0,158	68	0,2408138
15,692	545,2	546,0	96,62	96,48	0,153	0,157	69	0,2418657
14,854	545,1	546,0	102,41	102,10	0,153	0,157	70	0,2289316
14,755	545,1	545,9	102,33	102,54	0,152	0,157	71	0,2273756
14,751	545,0	545,9	103,85	102,78	0,153	0,157	72	0,2273756
15,519	545,0	545,8	96,85	97,23	0,152	0,157	73	0,2393339
14,815	545,0	545,8	101,46	101,97	0,151	0,157	74	0,2284881
14,818	544,9	545,7	103,71	102,80	0,153	0,157	75	0,2284878
14,814	544,9	545,7	103,43	102,57	0,154	0,158	76	0,2284499
14,671	544,8	545,6	103,39	102,94	0,153	0,157	77	0,2262564
15,410	544,8	545,6	98,97	97,96	0,153	0,157	78	0,2379032
14,762	544,7	545,5	101,63	102,28	0,152	0,157	79	0,2278204
14,862	544,7	545,5	101,09	101,75	0,151	0,157	80	0,2293742
14,831	544,6	545,5	102,19	101,82	0,152	0,157	81	0,228931
14,728	544,6	545,4	103,92	103,29	0,153	0,157	82	0,2273747
14,923	544,6	545,4	102,41	101,76	0,154	0,158	83	0,2304766
15,157	544,6	545,3	100,76	99,53	0,154	0,157	84	0,2341892
14,989	544,5	545,3	101,96	101,01	0,154	0,157	85	0,2315745
14,798	544,5	545,3	102,47	101,82	0,154	0,157	86	0,2286059
14,846	544,5	545,2	102,67	101,62	0,153	0,157	87	0,2293735
14,848	544,5	545,2	100,69	101,62	0,152	0,157	88	0,2293743
14,817	544,5	545,2	101,54	101,85	0,151	0,157	89	0,2289304
15,578	544,4	545,1	96,15	96,13	0,152	0,157	90	0,2408129
15,736	544,4	545,1	95,10	95,89	0,151	0,157	91	0,2433282
15,777	544,4	545,1	96,90	96,32	0,153	0,158	92	0,2439536
15,867	544,4	545,1	94,08	94,72	0,153	0,158	93	0,2454058
15,800	544,4	545,1	97,32	95,52	0,153	0,157	94	0,244369
15,839	544,4	545,0	94,22	94,47	0,153	0,157	95	0,2449908
15,838	544,3	545,0	96,19	95,44	0,153	0,157	96	0,2449908
15,797	544,3	545,0	96,97	95,52	0,155	0,158	97	0,2443695
15,796	544,3	545,0	96,97	95,52	0,155	0,157	98	0,244369
14,901	544,3	545,0	102,45	101,65	0,155	0,158	99	0,2304761
14,900	544,3	544,9	102,44	101,14	0,154	0,158	100	0,2304758
15,045	544,2	544,9	99,72	100,18	0,153	0,157	101	0,2326676
15,512	544,2	544,9	98,39	96,69	0,153	0,157	102	0,239967
15,137	544,2	544,9	100,98	99,31	0,155	0,157	103	0,2341885
15,792	544,2	544,8	94,67	94,97	0,153	0,157	104	0,2443682
15,853	544,2	544,8	96,22	95,00	0,153	0,157	105	0,2454052
15,762	544,2	544,8	94,96	94,76	0,153	0,157	106	0,2439531
15,720	544,1	544,8	94,48	95,51	0,151	0,156	107	0,243328
15,783	544,1	544,8	96,21	95,10	0,152	0,157	108	0,2443683
15,824	544,1	544,7	96,49	95,44	0,154	0,157	109	0,2449905
15,782	544,1	544,7	94,52	95,34	0,153	0,158	110	0,2443699
15,620	544,1	544,7	97,18	95,56	0,153	0,157	111	0,2418633
15,821	544,0	544,7	96,15	95,36	0,154	0,157	112	0,2450197
15,713	544,0	544,6	94,88	95,89	0,153	0,158	113	0,2433277
15,850	544,0	544,6	94,00	94,74	0,151	0,157	114	0,2454043
15,127	544,0	544,6	98,36	99,86	0,151	0,157	115	0,2341885
14,890	544,0	544,6	101,19	101,63	0,152	0,158	116	0,2304761
15,716	543,9	544,6	95,21	96,66	0,152	0,158	117	0,2433272
15,845	543,9	544,5	95,83	94,29	0,153	0,157	118	0,2454045

15,865	543,9	544,5	93,89	94,66	0,153	0,157	119	0,2458175
15,611	543,9	544,5	97,34	95,61	0,153	0,157	120	0,2418628
15,863	543,9	544,5	95,98	94,26	0,154	0,156	121	0,2458178
15,861	543,9	544,5	95,99	94,92	0,155	0,157	122	0,2458177
15,897	543,8	544,4	95,69	94,38	0,155	0,157	123	0,2464363
15,803	543,8	544,4	94,88	95,30	0,153	0,157	124	0,2449902
15,734	543,8	544,4	94,73	95,06	0,152	0,157	125	0,2439526
15,764	543,8	544,4	95,35	95,17	0,152	0,157	126	0,2443679
15,896	543,8	544,4	95,88	94,24	0,154	0,157	127	0,2464366
15,110	543,8	544,4	99,52	99,29	0,154	0,157	128	0,234188
15,763	543,8	544,3	96,96	95,16	0,154	0,157	129	0,2443679
15,762	543,7	544,3	96,56	95,40	0,155	0,157	130	0,2443685
15,921	543,8	544,3	94,43	94,38	0,154	0,158	131	0,2468479
15,145	543,8	544,4	100,96	99,11	0,154	0,157	132	0,2347779
15,609	543,9	544,4	98,08	96,12	0,155	0,157	133	0,2418632
15,797	544,0	544,5	96,77	95,64	0,155	0,157	134	0,2443677
15,915	544,1	544,5	94,30	95,44	0,153	0,158	135	0,2458178
15,683	544,2	544,7	95,85	96,70	0,151	0,158	136	0,2418634
15,903	544,3	544,8	94,67	95,86	0,151	0,157	137	0,2449912
15,717	544,5	545,0	98,79	96,51	0,153	0,157	138	0,2418639
15,826	544,7	545,1	95,32	96,86	0,153	0,157	139	0,2433283
15,903	545,0	545,4	95,07	96,02	0,151	0,158	140	0,2443694
15,882	545,2	545,6	97,04	96,33	0,152	0,157	141	0,2439541
15,984	545,4	545,8	96,83	94,95	0,154	0,157	142	0,2454065
15,926	545,6	546,0	96,29	96,28	0,153	0,157	143	0,2443708
15,672	545,8	546,2	97,67	97,23	0,152	0,157	144	0,2403909
15,997	546,1	546,4	96,70	95,37	0,153	0,156	145	0,2454073
15,953	546,2	546,5	94,42	96,08	0,152	0,157	146	0,244993
16,026	546,2	546,6	95,82	94,71	0,152	0,157	147	0,2464391
15,914	546,2	546,6	96,93	94,86	0,154	0,156	148	0,2449926
15,954	546,1	546,6	95,83	94,85	0,154	0,156	149	0,2458202
15,914	546,1	546,6	95,04	95,22	0,153	0,157	150	0,245408
15,152	546,0	546,5	98,77	99,81	0,151	0,157	151	0,2337579
15,545	545,9	546,5	96,19	97,35	0,151	0,157	152	0,2399699
15,953	545,9	546,5	93,15	94,86	0,150	0,157	153	0,2464394
15,854	545,8	546,4	94,25	95,10	0,150	0,157	154	0,2449932
15,123	545,7	546,4	100,65	99,26	0,152	0,157	155	0,2337581
15,077	545,7	546,3	100,47	99,80	0,153	0,157	156	0,2331052
15,773	545,7	546,3	96,70	95,46	0,154	0,157	157	0,2439549
15,727	545,6	546,3	96,78	95,16	0,154	0,157	158	0,2433303
15,723	545,6	546,2	97,21	95,29	0,154	0,156	159	0,2433304
15,761	545,5	546,2	96,62	94,65	0,154	0,156	160	0,2439563
15,822	545,5	546,1	96,29	94,73	0,154	0,156	161	0,2449934
15,830	545,4	546,1	95,86	94,72	0,154	0,157	162	0,2451757
15,817	545,3	546,0	94,60	94,83	0,153	0,157	163	0,2449936
15,449	545,3	546,0	96,35	97,65	0,151	0,157	164	0,2393351
15,774	545,3	546,0	95,87	95,11	0,152	0,157	165	0,2443708
15,758	545,3	545,9	93,98	95,64	0,152	0,157	166	0,2439558
15,413	545,3	545,9	97,10	97,74	0,151	0,157	167	0,2382721
15,831	545,4	546,0	96,37	94,87	0,152	0,156	168	0,2443712
15,900	545,5	546,1	94,45	95,70	0,152	0,157	169	0,2449935
15,876	545,6	546,2	96,58	95,82	0,152	0,157	170	0,2443717
15,866	545,8	546,3	94,75	96,01	0,152	0,157	171	0,2439561
15,900	546,0	546,5	97,03	95,45	0,152	0,157	172	0,2443719
15,727	546,1	546,7	96,08	96,54	0,153	0,156	173	0,2418671
15,939	546,2	546,8	95,74	95,15	0,152	0,157	174	0,245409
15,897	546,2	546,8	94,25	95,58	0,152	0,157	175	0,244994
15,841	546,2	546,8	96,47	95,06	0,152	0,157	176	0,2443718
15,869	546,2	546,8	94,09	95,58	0,152	0,157	177	0,2449939
15,022	546,2	546,8	100,23	99,73	0,151	0,157	178	0,2320158
15,127	546,1	546,8	98,48	99,53	0,151	0,156	179	0,2337585
15,844	546,1	546,7	93,58	94,89	0,150	0,157	180	0,244994

15,071	546,1	546,7	98,13	99,66	0,150	0,157	181	0,2331065
15,631	546,0	546,7	95,51	95,72	0,150	0,156	182	0,2418715
15,829	545,9	546,6	96,36	94,63	0,153	0,156	183	0,2449942
15,850	545,9	546,6	94,66	95,09	0,153	0,157	184	0,2454084
15,620	545,8	546,5	95,54	96,26	0,152	0,157	185	0,2418676
15,778	545,8	546,5	95,01	94,41	0,152	0,156	186	0,2443715
15,869	545,7	546,4	93,85	94,57	0,152	0,156	187	0,2458215
14,806	545,7	546,4	102,20	101,30	0,152	0,157	188	0,2293766
14,775	545,6	546,3	102,27	102,19	0,153	0,157	189	0,2289242
15,702	545,6	546,3	94,57	95,53	0,152	0,158	190	0,2433313
15,578	545,5	546,2	96,31	96,52	0,152	0,157	191	0,2414473
15,737	545,5	546,2	96,99	95,25	0,154	0,157	192	0,2439566
15,695	545,4	546,1	94,98	95,70	0,153	0,157	193	0,2433309
15,732	545,4	546,1	93,88	95,24	0,151	0,157	194	0,2439563
15,752	545,4	546,1	96,11	94,89	0,152	0,157	195	0,2442973
15,756	545,3	546,0	96,03	94,76	0,154	0,157	196	0,2443711
15,914	545,3	546,0	95,38	93,99	0,154	0,157	197	0,246851
15,589	545,2	545,9	94,42	96,04	0,152	0,157	198	0,2418668
15,818	545,2	545,9	93,43	94,44	0,150	0,157	199	0,2454079
15,747	545,1	545,8	94,07	94,34	0,151	0,156	200	0,2443722
15,906	545,1	545,8	93,28	94,07	0,151	0,157	201	0,2468514
15,838	545,1	545,8	95,94	94,88	0,153	0,157	202	0,2458205
15,835	545,1	545,8	93,54	94,05	0,153	0,157	203	0,2458205
15,783	545,1	545,7	94,22	94,90	0,151	0,157	204	0,2449933
15,718	545,0	545,7	95,68	94,83	0,152	0,157	205	0,2439555
15,706	545,0	545,7	94,77	95,61	0,152	0,157	206	0,2433302
15,775	545,1	545,7	96,22	95,44	0,152	0,157	207	0,2439555
15,801	545,2	545,8	95,59	95,94	0,153	0,157	208	0,2439556
15,780	545,4	545,9	95,41	95,72	0,152	0,157	209	0,24333
15,441	545,5	546,1	99,38	98,35	0,153	0,157	210	0,237847
15,846	545,7	546,2	97,43	96,52	0,154	0,158	211	0,243956
15,572	545,9	546,4	98,50	97,45	0,154	0,158	212	0,2399705
15,882	546,0	546,5	96,20	95,60	0,154	0,157	213	0,2449936
15,760	546,0	546,5	94,82	95,53	0,152	0,157	214	0,2433307
15,855	546,0	546,5	95,97	95,29	0,152	0,157	215	0,244994
15,737	546,0	546,6	96,75	95,68	0,154	0,157	216	0,2433314
15,727	546,0	546,6	94,64	95,31	0,152	0,157	217	0,2433312
15,880	545,9	546,5	93,40	93,80	0,150	0,156	218	0,2458212
15,874	545,9	546,5	95,61	94,71	0,152	0,156	219	0,2458208
15,815	545,8	546,4	93,82	94,59	0,152	0,157	220	0,244994
15,809	545,7	546,4	93,38	94,54	0,150	0,156	221	0,2449938
15,764	545,7	546,4	95,21	94,86	0,151	0,157	222	0,2443709
15,760	545,6	546,3	96,38	95,50	0,153	0,157	223	0,2443714
15,757	545,6	546,3	96,06	95,36	0,154	0,158	224	0,2443716
15,794	545,5	546,2	95,92	95,11	0,154	0,158	225	0,2449941
15,684	545,5	546,2	96,67	95,82	0,154	0,158	226	0,2433305
15,683	545,4	546,1	94,08	95,20	0,152	0,157	227	0,2433305
15,721	545,4	546,1	95,88	95,18	0,152	0,157	228	0,2439563
15,788	545,4	546,1	95,90	94,72	0,154	0,157	229	0,244993
15,716	545,3	546,0	96,20	94,92	0,154	0,157	230	0,2439559
15,811	545,3	546,0	96,04	94,82	0,154	0,157	231	0,2454075
15,834	545,3	545,9	93,26	94,26	0,153	0,157	232	0,2458205
15,832	545,2	545,9	93,33	93,97	0,151	0,157	233	0,2458202
15,779	545,2	545,9	96,20	94,95	0,153	0,157	234	0,2449931
15,737	545,1	545,8	94,15	94,90	0,153	0,157	235	0,2443714
15,829	545,1	545,8	93,71	93,89	0,151	0,157	236	0,2458207
15,733	545,1	545,7	93,98	94,53	0,151	0,156	237	0,244371
15,826	545,0	545,7	95,92	94,65	0,153	0,157	238	0,2458166
15,570	545,0	545,7	97,33	96,11	0,155	0,157	239	0,2418652
15,824	545,0	545,6	93,74	94,57	0,153	0,157	240	0,24582
15,796	545,0	545,6	95,69	94,37	0,153	0,157	241	0,2454075
15,568	544,9	545,6	95,14	96,13	0,153	0,157	242	0,2418652

15,728	544,9	545,5	93,95	95,12	0,151	0,157	243	0,2443708
15,661	544,9	545,5	93,85	95,32	0,150	0,157	244	0,2433298
15,727	544,9	545,5	96,38	94,75	0,152	0,157	245	0,244371
15,765	544,8	545,5	95,78	94,94	0,154	0,157	246	0,2449925
15,765	544,8	545,4	96,03	94,94	0,154	0,158	247	0,2449928
15,818	544,8	545,4	95,43	94,38	0,154	0,157	248	0,2458201
15,764	544,7	545,4	95,84	95,04	0,154	0,157	249	0,2449925
15,697	544,7	545,3	94,01	95,03	0,152	0,157	250	0,2439552
14,915	544,7	545,3	101,38	100,55	0,152	0,157	251	0,2315754
15,280	544,7	545,3	99,58	98,53	0,154	0,158	252	0,2367767
15,635	544,8	545,4	95,82	96,86	0,153	0,158	253	0,2418653
15,760	545,0	545,5	96,96	96,09	0,153	0,158	254	0,2433297
15,652	545,1	545,6	98,05	96,62	0,154	0,157	255	0,241446
15,794	545,3	545,8	97,80	95,96	0,155	0,157	256	0,2433307
15,918	545,5	545,9	94,65	94,97	0,153	0,157	257	0,2454075
15,439	545,6	546,1	98,82	98,18	0,152	0,157	258	0,2382731
14,995	545,6	546,1	99,39	100,92	0,152	0,157	259	0,2315757
15,151	545,6	546,1	98,78	100,26	0,151	0,158	260	0,2341907
15,836	545,6	546,1	95,97	94,47	0,152	0,157	261	0,2449927
15,626	545,6	546,1	97,65	95,92	0,154	0,156	262	0,2418659
15,821	545,6	546,1	93,56	95,06	0,152	0,157	263	0,2449928
15,814	545,6	546,1	96,30	94,52	0,152	0,157	264	0,2449929
15,836	545,5	546,1	95,83	94,56	0,154	0,157	265	0,2454073
15,806	545,5	546,1	95,89	94,59	0,154	0,157	266	0,2449931
15,695	545,5	546,1	94,09	95,83	0,152	0,157	267	0,2433307
15,852	545,4	546,0	95,60	94,40	0,152	0,157	268	0,2458203
15,567	545,4	546,0	95,31	96,50	0,152	0,157	269	0,2414463
15,793	545,4	546,0	93,46	95,03	0,151	0,157	270	0,2449932
15,725	545,3	545,9	96,11	95,32	0,152	0,157	271	0,2439559
15,818	545,3	545,9	95,83	94,53	0,154	0,157	272	0,2454071
15,749	545,2	545,9	95,33	95,26	0,154	0,157	273	0,2443709
15,785	545,2	545,8	95,33	94,30	0,153	0,157	274	0,2449928
14,949	545,1	545,8	101,33	100,04	0,154	0,157	275	0,2320165
15,676	545,1	545,8	96,49	95,13	0,154	0,157	276	0,2433303
15,675	545,1	545,7	95,19	95,68	0,153	0,157	277	0,2433299
14,990	545,1	545,7	99,09	99,92	0,152	0,157	278	0,2326694
14,990	545,0	545,7	98,81	100,23	0,151	0,158	279	0,2326691
15,739	545,0	545,6	96,46	94,54	0,153	0,157	280	0,2443702
15,670	545,0	545,6	96,70	95,43	0,155	0,157	281	0,2433292
15,869	545,0	545,6	93,32	94,29	0,153	0,157	282	0,2464391
15,726	544,9	545,6	94,27	95,43	0,151	0,158	283	0,2442136
15,735	544,9	545,5	96,15	94,76	0,153	0,157	284	0,2443704
15,573	544,9	545,5	95,00	96,64	0,153	0,158	285	0,2418653
15,735	544,9	545,5	96,27	94,89	0,153	0,158	286	0,2443695
15,773	544,8	545,4	94,38	94,90	0,153	0,157	287	0,2449916
15,772	544,8	545,4	93,97	94,87	0,152	0,157	288	0,2449914
15,771	544,8	545,4	95,77	94,57	0,153	0,157	289	0,2449921
15,770	544,7	545,3	94,09	94,72	0,153	0,157	290	0,2449917
15,796	544,7	545,3	93,55	94,93	0,151	0,157	291	0,2454064
15,796	544,7	545,3	96,37	94,37	0,153	0,157	292	0,2454064
15,568	544,7	545,3	95,61	96,13	0,154	0,157	293	0,2418645
15,822	544,6	545,2	94,38	94,26	0,152	0,157	294	0,2458187
15,769	544,6	545,2	96,47	94,46	0,154	0,157	295	0,2449919
15,671	544,6	545,2	94,69	95,07	0,153	0,157	296	0,2434901
15,860	544,6	545,2	93,53	94,39	0,151	0,157	297	0,2464381
15,818	544,6	545,2	93,32	94,38	0,151	0,157	298	0,2458182
15,766	544,6	545,1	94,06	94,81	0,151	0,157	299	0,2449912
15,858	544,6	545,1	95,48	94,18	0,153	0,157	300	0,2464378
15,857	544,6	545,1	93,35	94,55	0,153	0,158	301	0,2464382
15,766	544,5	545,1	94,12	95,19	0,151	0,158	302	0,2449915
15,764	544,5	545,1	94,62	94,92	0,152	0,158	303	0,2449911
15,791	544,5	545,1	93,74	95,37	0,152	0,158	304	0,2454056

15,697	544,5	545,0	94,78	95,44	0,152	0,158	305	0,2439539
15,764	544,4	545,0	93,62	95,00	0,151	0,158	306	0,2449919
15,774	544,4	545,0	94,24	94,61	0,151	0,157	307	0,244991
15,802	544,5	545,0	94,36	95,48	0,152	0,158	308	0,2449913
15,796	544,6	545,1	94,71	95,37	0,151	0,158	309	0,2443691
15,754	544,7	545,2	97,21	95,73	0,153	0,157	310	0,2433285
15,075	544,9	545,3	102,28	100,57	0,155	0,157	311	0,2324922
15,897	545,1	545,5	96,70	95,43	0,155	0,157	312	0,2449912
15,453	545,2	545,7	99,75	97,80	0,155	0,157	313	0,2382699
15,804	545,4	545,8	94,58	95,62	0,153	0,157	314	0,2439538
15,750	545,4	545,8	95,01	96,22	0,151	0,157	315	0,2433289
15,871	545,4	545,9	94,12	94,80	0,151	0,157	316	0,2454064
15,632	545,4	545,9	97,74	96,11	0,153	0,157	317	0,241865
14,888	545,4	545,9	102,37	100,63	0,155	0,157	318	0,2304783

Tunnel	Temp.	Temp.	98,69	98,60	System 1	System 2		SQRT
Velocity	Meter 1	Meter 2	**Proportional Rates**		Vol.Std.	Vol.Std.		Delta-P
			PR1	**PR2**			Time	
Ft/Sec	Deg. R	Deg. R	**%**	**%**	(ft3)	(ft3)	min	(in H2O)2
14,803	542,9	543,8			0,057	0,160	0	0,2180344
14,815	543,0	543,8	86,21	100,67	0,094	0,158	1	0,2212649
14,735	543,0	543,8	97,59	100,95	0,139	0,157	2	0,2208091
15,620	543,0	543,8	95,94	96,16	0,150	0,157	3	0,2331016
14,468	543,1	543,8	108,58	105,29	0,155	0,157	4	0,2140443
14,696	543,1	543,9	106,82	105,78	0,156	0,157	5	0,2156968
14,803	543,2	543,9	107,65	106,43	0,154	0,158	6	0,2156973
14,769	543,3	544,0	110,45	108,11	0,155	0,157	7	0,2135706
14,872	543,5	544,2	111,73	107,91	0,156	0,157	8	0,2140443
14,953	543,7	544,4	111,98	108,34	0,157	0,156	9	0,2140449
14,768	543,9	544,6	113,88	110,28	0,157	0,156	10	0,2111823
14,909	544,2	544,9	109,02	108,51	0,155	0,157	11	0,214045
14,676	544,5	545,1	111,59	109,98	0,154	0,157	12	0,2107021
14,759	544,7	545,4	108,32	109,27	0,153	0,157	13	0,2123802
14,804	545,0	545,6	109,40	106,95	0,153	0,157	14	0,2145194
14,727	545,1	545,8	107,17	106,20	0,154	0,156	15	0,2145189
14,688	545,2	546,0	107,91	105,77	0,154	0,156	16	0,2145197
14,653	545,3	546,1	108,15	105,60	0,155	0,156	17	0,2145191
14,698	545,4	546,3	105,02	105,90	0,153	0,157	18	0,2152278
14,720	545,5	546,4	104,90	105,02	0,151	0,157	19	0,2156989
14,993	545,7	546,5	104,39	101,80	0,153	0,156	20	0,2203517
15,789	545,8	546,6	96,34	96,81	0,153	0,156	21	0,232671
14,686	545,8	546,6	103,55	104,32	0,151	0,156	22	0,2164036
14,765	545,7	546,6	102,36	103,51	0,150	0,156	23	0,2175723
14,589	545,7	546,6	106,11	104,33	0,152	0,156	24	0,2152276
15,422	545,7	546,6	97,59	98,78	0,152	0,156	25	0,2278219
15,685	545,8	546,6	98,09	96,25	0,152	0,156	26	0,232016
14,645	545,8	546,6	103,39	104,28	0,152	0,156	27	0,2164036
14,510	545,8	546,7	106,54	104,36	0,153	0,156	28	0,2145211
14,630	545,9	546,8	102,94	103,65	0,152	0,156	29	0,2164049
14,568	546,0	546,8	105,75	103,63	0,152	0,156	30	0,2155974
14,829	546,1	546,9	103,18	101,93	0,154	0,156	31	0,2196611
14,522	546,1	546,9	103,43	104,46	0,152	0,156	32	0,2152285
14,407	546,1	546,9	104,28	104,68	0,151	0,156	33	0,2135732
14,574	546,1	546,9	102,31	103,62	0,150	0,156	34	0,2164042
14,827	546,2	547,0	100,22	101,33	0,150	0,156	35	0,2203543
14,650	546,2	547,0	103,53	102,22	0,151	0,156	36	0,2175737
14,562	546,2	547,0	103,23	103,61	0,152	0,156	37	0,216405
14,465	546,2	547,0	104,63	103,65	0,152	0,157	38	0,2152303
14,499	546,3	547,1	103,88	103,85	0,153	0,157	39	0,2157
14,545	546,3	547,1	101,26	102,41	0,151	0,156	40	0,2168722
14,495	546,3	547,1	102,94	103,13	0,151	0,156	41	0,2164045
14,707	546,3	547,1	102,16	100,82	0,152	0,156	42	0,2196623
14,472	546,4	547,2	101,62	101,94	0,152	0,155	43	0,2164045
14,500	546,4	547,2	102,75	101,90	0,151	0,155	44	0,2168723
14,535	546,4	547,2	102,68	101,64	0,152	0,156	45	0,2175734
14,628	546,4	547,2	101,91	100,46	0,153	0,156	46	0,2191999
14,535	546,4	547,2	99,60	100,84	0,151	0,155	47	0,2180393
14,631	546,4	547,2	98,99	100,11	0,149	0,155	48	0,219661
14,423	546,4	547,2	100,64	100,73	0,150	0,155	49	0,2168728
14,329	546,4	547,2	100,92	102,14	0,150	0,155	50	0,2157007
14,588	546,4	547,2	101,71	100,30	0,152	0,156	51	0,2196614
14,568	546,4	547,2	101,48	100,04	0,154	0,156	52	0,2196621
14,420	546,4	547,2	99,40	100,97	0,151	0,156	53	0,2175739
14,618	546,4	547,2	99,96	99,02	0,151	0,156	54	0,2208133
14,611	546,4	547,2	100,67	99,44	0,153	0,156	55	0,2208132
14,497	546,4	547,2	98,74	99,84	0,151	0,156	56	0,2191998
14,417	546,4	547,2	101,93	100,81	0,152	0,156	57	0,2180392

14,596	546,4	547,2	98,02	98,88	0,152	0,156	58	0,220814
14,599	546,3	547,1	98,08	99,02	0,150	0,156	59	0,2208134
14,340	546,3	547,1	104,23	100,75	0,153	0,156	60	0,2168725
14,407	546,3	547,1	98,97	100,25	0,153	0,156	61	0,2180417
14,520	546,3	547,1	98,56	99,57	0,149	0,156	62	0,2196616
14,562	546,3	547,1	98,01	99,38	0,149	0,156	63	0,2203536
15,213	546,3	547,1	93,94	94,65	0,150	0,156	64	0,2304824
14,652	546,3	547,1	99,56	98,88	0,151	0,156	65	0,2219611
14,507	546,3	547,1	101,20	99,91	0,153	0,156	66	0,2196615
14,469	546,2	547,1	100,50	100,10	0,153	0,156	67	0,2192001
14,544	546,3	547,0	98,33	99,07	0,151	0,156	68	0,2203539
14,499	546,2	547,0	98,02	98,98	0,149	0,155	69	0,2196621
14,019	546,3	547,0	101,46	102,22	0,149	0,155	70	0,2123833
15,408	546,3	547,0	92,13	92,95	0,149	0,155	71	0,2337611
14,451	546,3	547,0	98,72	99,71	0,150	0,156	72	0,2191999
14,262	546,2	547,0	102,34	101,44	0,152	0,156	73	0,2164059
14,524	546,2	547,0	100,09	99,37	0,153	0,157	74	0,2203542
14,555	546,1	546,9	100,10	99,39	0,153	0,157	75	0,2208141
14,449	546,1	546,9	98,72	99,90	0,152	0,157	76	0,2192004
14,550	546,1	546,9	100,57	99,55	0,152	0,157	77	0,2208134
14,548	546,2	546,9	97,77	98,49	0,152	0,156	78	0,2208137
14,515	546,2	546,9	100,00	99,84	0,151	0,156	79	0,2203541
14,548	546,2	546,9	97,39	98,20	0,151	0,156	80	0,2208133
14,478	546,2	546,9	97,72	99,19	0,149	0,155	81	0,2196619
14,475	546,2	546,9	98,24	99,23	0,149	0,156	82	0,2196618
14,442	546,2	546,9	100,22	99,69	0,151	0,156	83	0,2192002
14,551	546,2	546,9	99,99	98,99	0,153	0,156	84	0,2208139
14,438	546,2	546,9	98,74	99,88	0,152	0,156	85	0,2192001
14,540	546,2	546,9	100,18	99,16	0,152	0,156	86	0,2208138
14,465	546,2	546,9	99,50	99,65	0,153	0,156	87	0,2197032
14,536	546,2	546,9	98,00	98,92	0,151	0,156	88	0,2208137
14,497	546,2	546,9	100,59	99,16	0,152	0,156	89	0,2203545
14,522	546,2	546,9	97,96	98,62	0,152	0,156	90	0,2208134
14,260	546,1	546,9	101,61	101,25	0,152	0,157	91	0,2168733
14,490	546,1	546,9	97,72	99,09	0,151	0,157	92	0,2203545
14,185	546,2	546,9	100,34	101,33	0,150	0,156	93	0,2157013
14,412	546,2	546,9	98,14	99,13	0,150	0,156	94	0,2192004
14,489	546,2	546,9	97,91	98,51	0,150	0,155	95	0,2203544
14,585	546,2	546,9	98,30	98,63	0,151	0,156	96	0,2219605
14,403	546,2	546,9	100,60	99,80	0,152	0,157	97	0,2192004
14,533	546,2	546,9	98,75	98,89	0,153	0,157	98	0,2212735
14,573	546,2	546,9	99,55	98,38	0,153	0,157	99	0,2219599
14,520	546,2	546,9	98,55	97,69	0,153	0,156	100	0,2212731
14,310	546,2	546,9	101,03	99,66	0,153	0,155	101	0,2180396
15,323	546,1	546,8	94,03	93,16	0,153	0,156	102	0,2337611
14,474	546,1	546,8	100,02	98,91	0,154	0,157	103	0,2208135
14,475	546,1	546,8	97,02	98,22	0,152	0,156	104	0,2208142
14,369	546,1	546,8	100,51	99,33	0,151	0,156	105	0,2192004
14,502	546,1	546,8	96,99	98,20	0,152	0,156	106	0,2212731
14,440	546,1	546,8	99,86	98,77	0,151	0,156	107	0,2203542
14,470	546,1	546,8	97,39	98,71	0,152	0,156	108	0,2208137
14,501	546,1	546,8	97,34	98,65	0,150	0,157	109	0,2212731
15,308	546,1	546,8	91,42	92,93	0,150	0,156	110	0,2337613
14,534	546,1	546,8	98,64	97,53	0,151	0,156	111	0,2219599
14,282	546,1	546,8	100,63	99,64	0,153	0,156	112	0,2180399
14,646	546,1	546,8	96,13	97,14	0,151	0,156	113	0,2235536
14,491	546,1	546,8	97,01	98,27	0,150	0,156	114	0,2212737
14,385	546,1	546,8	99,85	98,46	0,151	0,156	115	0,219662
14,357	546,2	546,8	100,61	99,18	0,153	0,156	116	0,2191998
14,534	546,2	546,8	96,76	97,77	0,152	0,156	117	0,2219597
14,459	546,2	546,8	96,83	98,48	0,149	0,156	118	0,2208132
14,455	546,2	546,8	97,46	98,59	0,150	0,156	119	0,2208137

14,479	546,2	546,8	99,34	97,78	0,152	0,156	120	0,2212737
14,421	546,2	546,8	98,73	98,45	0,153	0,156	121	0,2203542
14,421	546,2	546,8	97,66	99,10	0,151	0,157	122	0,2203544
14,374	546,2	546,8	97,87	99,21	0,150	0,157	123	0,219662
14,476	546,2	546,8	99,09	98,13	0,152	0,156	124	0,2212731
15,282	546,2	546,8	94,08	92,74	0,153	0,156	125	0,2337608
15,346	546,2	546,8	93,45	91,92	0,154	0,156	126	0,2348437
14,355	546,2	546,8	99,58	99,16	0,153	0,156	127	0,2196619
14,460	546,2	546,8	97,76	98,30	0,152	0,157	128	0,2212731
14,428	546,2	546,8	99,49	98,19	0,152	0,156	129	0,2208138
14,492	546,2	546,8	98,55	97,36	0,153	0,156	130	0,2219593
14,517	546,2	546,8	98,30	97,36	0,153	0,156	131	0,222417
14,410	546,2	546,8	99,22	97,87	0,153	0,156	132	0,2208133
14,332	546,2	546,8	97,11	99,17	0,151	0,156	133	0,2196618
14,440	546,1	546,8	96,96	98,33	0,150	0,157	134	0,2212727
15,306	546,1	546,7	91,02	92,35	0,150	0,157	135	0,2348435
14,498	546,1	546,7	96,22	97,68	0,150	0,157	136	0,2224163
14,423	546,1	546,7	98,48	97,61	0,151	0,156	137	0,2212724
15,257	546,1	546,7	93,30	92,36	0,153	0,156	138	0,2341942
14,566	546,1	546,7	97,98	96,38	0,153	0,156	139	0,2235523
14,463	546,1	546,7	96,98	97,64	0,152	0,156	140	0,22196
14,534	546,0	546,7	95,59	97,37	0,150	0,157	141	0,2230999
14,488	546,0	546,6	98,44	96,94	0,152	0,156	142	0,2224159
14,454	546,0	546,6	96,50	97,58	0,152	0,156	143	0,2219597
14,528	546,0	546,6	98,28	96,80	0,152	0,156	144	0,2230994
14,378	546,0	546,6	96,58	98,36	0,152	0,157	145	0,2208137
14,270	546,0	546,6	99,99	98,26	0,152	0,156	146	0,2192002
14,268	546,0	546,6	97,67	98,85	0,152	0,156	147	0,2192004
14,402	545,9	546,5	98,92	97,48	0,152	0,156	148	0,2212732
14,401	545,9	546,6	96,91	98,03	0,152	0,156	149	0,2212736
14,517	545,9	546,5	96,07	97,09	0,150	0,157	150	0,2230993
14,793	545,9	546,5	96,00	95,03	0,152	0,156	151	0,22738
14,439	545,9	546,5	96,44	97,77	0,152	0,157	152	0,2219595
14,332	545,9	546,5	98,74	97,84	0,152	0,156	153	0,2203543
14,437	545,9	546,5	95,84	97,69	0,151	0,156	154	0,2219598
14,361	545,9	546,5	98,68	97,97	0,151	0,157	155	0,2208131
14,390	545,9	546,5	99,07	97,44	0,153	0,156	156	0,2212726
14,389	545,8	546,4	98,78	97,19	0,154	0,156	157	0,2212729
14,326	545,8	546,4	96,68	98,16	0,152	0,156	158	0,2203533
14,325	545,8	546,4	97,05	98,10	0,150	0,157	159	0,2203535
14,533	545,8	546,4	95,77	97,32	0,150	0,157	160	0,2235528
14,880	545,8	546,4	95,89	94,05	0,152	0,157	161	0,2289343
15,384	545,8	546,4	91,26	91,42	0,153	0,156	162	0,2367796
15,216	545,8	546,3	92,60	92,66	0,152	0,157	163	0,2341939
15,450	545,8	546,3	91,33	90,84	0,153	0,157	164	0,2378495
14,495	545,8	546,3	97,94	96,90	0,153	0,157	165	0,223099
15,226	545,8	546,3	93,31	91,97	0,154	0,156	166	0,23444
15,376	545,8	546,3	92,11	91,48	0,154	0,157	167	0,2367775
14,492	545,8	546,3	97,26	96,34	0,153	0,156	168	0,2231231
14,446	545,7	546,3	98,23	96,98	0,153	0,156	169	0,2224154
14,417	545,7	546,3	95,61	97,43	0,151	0,156	170	0,2219593
14,372	545,7	546,3	95,91	97,53	0,149	0,157	171	0,2212729
15,247	545,7	546,3	93,21	92,11	0,152	0,157	172	0,234843
14,370	545,7	546,3	96,24	97,69	0,152	0,157	173	0,2212725
14,367	545,7	546,2	99,04	97,46	0,152	0,156	174	0,221273
14,444	545,7	546,2	97,12	96,74	0,153	0,156	175	0,2224152
14,442	545,6	546,2	95,74	96,95	0,151	0,156	176	0,2224153
14,485	545,6	546,2	95,85	97,26	0,150	0,157	177	0,223099
14,488	545,6	546,2	97,93	97,06	0,152	0,157	178	0,2230992
14,413	545,6	546,1	98,99	97,49	0,154	0,157	179	0,2219593
14,442	545,6	546,2	96,46	97,33	0,153	0,157	180	0,2224155
14,487	545,6	546,1	97,80	96,68	0,152	0,157	181	0,223099

14,514	545,6	546,1	96,29	96,74	0,152	0,157	182	0,2235524
14,481	545,6	546,1	97,38	96,92	0,152	0,157	183	0,2230989
14,438	545,5	546,1	96,45	96,72	0,152	0,156	184	0,2224151
14,859	545,5	546,1	95,88	94,60	0,153	0,157	185	0,2289342
14,094	545,5	546,1	100,99	99,39	0,154	0,157	186	0,2171214
14,302	545,5	546,0	97,10	97,37	0,152	0,156	187	0,2203534
14,436	545,5	546,0	98,17	97,05	0,152	0,156	188	0,2224152
14,478	545,5	546,0	96,57	97,01	0,153	0,157	189	0,2230989
14,403	545,4	546,0	95,64	97,25	0,151	0,157	190	0,2219589
14,537	545,4	546,0	97,88	96,39	0,152	0,157	191	0,2240066
15,168	545,4	546,0	93,36	92,47	0,154	0,157	192	0,2337599
14,327	545,5	546,0	99,02	98,09	0,154	0,157	193	0,2208127
14,146	545,4	546,0	98,25	98,81	0,152	0,157	194	0,2180386
14,297	545,4	546,0	96,80	97,48	0,150	0,156	195	0,2203507
14,400	545,4	546,0	95,95	96,64	0,150	0,156	196	0,2219588
14,296	545,4	546,0	97,08	97,71	0,150	0,156	197	0,2203535
14,342	545,4	546,0	98,56	97,89	0,152	0,157	198	0,221105
14,397	545,4	545,9	98,15	97,22	0,153	0,157	199	0,2219589
15,228	545,4	545,9	90,62	91,44	0,152	0,156	200	0,2348423
15,226	545,3	545,9	93,36	92,43	0,152	0,157	201	0,2348422
14,394	545,3	545,9	96,16	96,85	0,152	0,157	202	0,2219994
14,319	545,3	545,9	96,49	97,39	0,150	0,156	203	0,2208119
14,523	545,3	545,9	95,89	96,40	0,151	0,156	204	0,2240062
14,597	545,3	545,8	97,23	96,41	0,153	0,157	205	0,2251353
14,347	545,3	545,8	96,55	97,36	0,152	0,157	206	0,2212719
14,492	545,3	545,9	95,25	95,99	0,150	0,156	207	0,2235522
14,285	545,3	545,8	99,62	98,05	0,152	0,156	208	0,2203527
14,387	545,3	545,8	97,00	97,00	0,153	0,157	209	0,2219587
14,415	545,3	545,8	96,03	96,63	0,151	0,156	210	0,2224144
14,808	545,3	545,8	93,35	94,02	0,150	0,156	211	0,2284885
15,439	545,3	545,8	89,57	90,60	0,150	0,156	212	0,2382741
15,270	545,3	545,8	92,50	91,44	0,152	0,157	213	0,235705
15,241	545,2	545,8	92,57	92,09	0,154	0,157	214	0,2352745
15,337	545,2	545,8	92,08	91,31	0,154	0,157	215	0,2367789
14,453	545,3	545,8	98,18	97,19	0,154	0,157	216	0,2230984
14,454	545,3	545,8	95,03	96,47	0,152	0,157	217	0,2230982
14,512	545,2	545,8	94,97	95,90	0,150	0,156	218	0,2240062
14,511	545,2	545,8	94,92	95,81	0,150	0,156	219	0,224006
14,451	545,2	545,8	98,25	96,79	0,152	0,156	220	0,2230986
14,479	545,2	545,7	97,44	96,77	0,154	0,157	221	0,2235521
14,375	545,2	545,7	96,04	97,18	0,152	0,157	222	0,2219587
14,507	545,2	545,7	97,23	96,17	0,152	0,157	223	0,2240059
14,507	545,2	545,7	97,26	96,79	0,154	0,157	224	0,2240062
14,330	545,2	545,7	98,16	97,38	0,153	0,157	225	0,2212719
15,262	545,1	545,7	92,65	91,47	0,154	0,157	226	0,2357048
14,196	545,2	545,7	97,24	97,78	0,152	0,156	227	0,2191986
14,404	545,2	545,7	98,17	97,59	0,152	0,157	228	0,2224145
14,507	545,2	545,7	97,34	96,84	0,154	0,158	229	0,2240059
14,376	545,2	545,7	98,58	97,26	0,154	0,157	230	0,2219589
14,445	545,1	545,7	95,54	96,77	0,152	0,157	231	0,2230981
14,372	545,1	545,7	97,83	96,86	0,152	0,157	232	0,2219586
14,474	545,1	545,6	97,73	96,48	0,154	0,157	233	0,2235516
14,575	545,1	545,6	94,84	95,61	0,152	0,157	234	0,2251349
14,399	545,1	545,6	98,52	96,88	0,153	0,157	235	0,2224138
14,398	545,0	545,6	96,13	97,00	0,153	0,157	236	0,2224142
15,366	545,0	545,6	90,19	90,56	0,151	0,157	237	0,2374203
15,363	545,0	545,6	91,23	91,13	0,152	0,157	238	0,2374208
14,558	545,0	545,6	94,94	95,91	0,152	0,157	239	0,2249191

APPENDIX 4: Unit pre burn

Stricker 160 Preburn

Temps acquisition de données minutes	Flue temp °F	Room temp °F	scale lbs	Right °F	Back °F	bottom °F	Top °F	Left °F
0	122,34	69,95	3,98	68,08	68,27	68,36	75,61	69,02
1	226,72	70,02	3,76	68,13	68,54	68,55	93,66	70,72
2	368,64	70,02	3,57	68,50	69,41	69,28	131,38	73,79
3	537,03	70,21	3,28	69,70	71,47	70,97	205,49	79,33
4	704,52	70,27	2,96	72,25	75,85	73,84	292,47	90,98
5	799,76	70,59	2,57	76,33	83,08	77,94	396,39	105,81
6	849,45	71,12	2,17	82,40	93,52	83,42	496,58	120,91
7	856,83	71,51	1,87	90,48	105,74	90,16	568,63	136,46
8	789,07	71,64	1,58	100,05	118,05	98,44	619,06	152,12
9	741,35	71,94	1,46	110,30	130,29	107,93	647,67	167,84
10	723,14	71,82	1,17	121,07	142,58	118,50	663,63	184,62
11	726,66	72,00	1,08	132,36	155,11	129,92	677,31	201,73
12	571,96	71,97	13,30	145,36	167,35	142,45	660,82	223,14
13	371,05	72,05	12,46	158,19	177,74	156,08	599,04	239,53
14	341,37	72,02	11,25	169,77	186,04	168,93	544,06	245,68
15	363,11	72,02	11,06	180,33	192,76	181,06	504,31	247,82
16	562,82	71,71	10,84	188,84	198,12	192,21	513,26	249,14
17	716,63	72,02	10,55	196,96	202,52	201,67	561,00	253,69
18	745,83	72,22	10,26	204,85	206,62	209,90	604,13	260,42
19	746,68	72,35	10,05	212,35	210,52	217,23	633,46	268,00
20	749,08	72,45	9,75	219,43	215,87	223,74	654,63	276,32
21	765,46	72,72	9,46	226,18	221,23	229,93	677,47	283,83
22	783,40	72,86	9,15	232,87	227,61	236,04	702,37	290,99
23	792,84	73,00	8,96	239,32	234,34	242,04	728,52	298,32
24	801,55	73,05	8,66	245,36	241,47	247,97	749,93	305,94
25	809,69	73,31	8,36	251,53	249,12	254,08	763,40	314,34
26	804,26	73,32	8,16	257,72	257,17	260,45	776,79	322,51
27	802,63	73,56	7,85	263,33	266,12	266,53	785,76	331,02
28	809,73	73,41	7,56	269,48	275,24	272,92	795,78	338,95
29	813,46	73,66	7,26	275,24	284,67	279,76	802,61	346,77
30	823,24	74,03	6,95	281,39	294,17	286,74	812,73	354,47
31	832,42	74,33	6,66	287,16	303,81	293,59	821,21	362,55
32	835,19	74,01	6,37	293,44	313,67	301,06	827,20	370,43
33	847,60	74,37	6,16	300,04	323,60	308,75	834,61	378,19
34	845,65	74,24	5,86	306,45	332,80	316,47	842,89	386,18
35	854,45	74,04	5,57	313,06	341,75	324,31	848,64	394,13
36	870,73	75,08	5,26	319,77	350,61	332,38	860,91	401,33
37	873,94	74,66	4,97	326,48	358,99	340,33	871,96	409,37
38	868,89	75,16	4,78	333,62	367,57	348,97	877,77	417,11
39	860,24	75,55	4,46	341,22	375,59	357,47	881,47	424,85
40	850,07	75,62	4,27	348,81	383,98	366,31	878,04	432,26
41	845,67	75,79	4,08	356,35	392,90	375,17	872,20	439,37
42	835,84	75,82	3,76	363,50	401,42	383,83	863,83	446,42
43	824,37	75,42	3,57	370,82	410,58	392,82	857,14	452,88
44	816,35	75,86	3,42	377,59	420,00	401,46	848,79	458,82
45	810,02	75,66	3,18	384,38	429,01	410,02	841,89	464,48
46	801,60	75,47	3,06	390,89	437,70	418,74	831,05	470,46
47	787,70	75,79	2,87	397,19	446,80	427,11	821,86	476,29
48	776,65	75,74	2,68	403,44	455,57	434,60	813,88	481,52
49	770,62	76,17	2,54	409,37	463,28	442,13	801,14	486,82
50	759,86	76,02	2,38	414,70	471,28	449,13	791,29	492,75
51	751,64	76,32	2,27	420,69	479,05	456,53	781,48	498,66
52	741,38	75,75	2,07	426,41	486,24	464,24	770,82	505,12
53	727,03	75,92	1,98	431,94	493,61	471,53	757,31	510,58
54	632,96	75,73	9,76	442,70	504,75	481,23	723,53	521,98
55	1070,79	76,36	9,37	450,20	512,22	488,53	799,89	519,14
56	1148,38	76,57	8,96	455,35	516,40	494,11	870,01	516,55
57	1169,07	77,18	8,45	459,52	520,07	500,30	922,46	514,16
58	1143,05	77,00	8,06	462,77	522,73	505,28	965,84	512,91
59	1121,46	77,56	7,66	465,11	524,09	510,26	993,37	512,34
60	1105,30	79,20	7,37	467,60	523,42	514,69	1016,78	512,23
61	1105,10	78,91	6,96	470,24	522,27	518,59	1034,80	513,10
62	1095,72	78,90	6,57	471,61	520,48	521,87	1049,52	515,56
63	1073,35	79,84	6,16	473,50	517,24	524,39	1061,36	518,06
64	1065,80	79,58	5,77	475,42	514,57	526,36	1067,49	521,84
65	1059,45	79,38	5,36	476,95	511,61	527,70	1067,44	525,99
66	1048,99	79,75	5,07	478,88	509,37	529,09	1071,77	530,98
67	1019,11	80,48	4,78	480,52	508,83	530,53	1077,86	536,30
68	971,57	79,88	4,37	481,07	508,98	531,99	1078,58	541,64
69	941,34	79,45	4,18	482,52	508,52	533,17	1069,28	546,93
70	918,51	80,26	3,88	484,62	509,00	534,10	1052,56	552,92

71	901,55	78,96	3,67	486,75	508,75	535,15	1038,03	558,80
72	868,49	78,91	3,48	489,81	508,56	537,18	1011,13	564,00
73	848,95	79,56	3,28	493,20	509,49	538,72	979,09	568,04
74	837,46	79,10	2,97	497,79	510,49	540,61	954,99	571,79
75	828,06	79,44	2,81	501,05	511,44	542,26	936,36	575,54
76	800,93	78,35	2,77	505,22	512,11	544,62	910,55	579,39
77	779,90	78,50	2,58	508,67	512,13	546,54	885,76	583,23
78	763,59	77,52	2,48	512,42	512,51	548,28	864,90	586,35
79	742,25	78,26	2,39	515,97	512,22	550,51	839,18	588,38
80	728,30	78,38	2,17	519,60	512,15	552,22	818,07	589,21
81	723,32	77,95	2,07	521,89	512,14	553,40	800,27	589,67
82	715,43	78,86	1,98	524,59	513,07	554,99	783,99	589,08
83	705,92	78,51	1,88	527,25	514,40	556,42	768,17	588,44
84	699,07	78,34	1,78	528,56	515,86	556,83	755,19	587,37
85	697,04	78,19	1,68	529,32	517,15	557,28	745,82	586,62
86	690,93	78,24	1,59	530,45	519,63	557,89	733,70	585,43
87	684,82	78,20	1,47	531,34	520,98	558,57	725,87	585,08
88	671,91	78,31	1,37	532,37	523,64	558,92	717,17	584,46
89	661,13	78,10	1,27	532,15	524,72	559,33	704,61	582,96
90	653,97	78,18	1,27	532,35	526,79	559,84	693,15	581,48
91	645,95	78,18	1,18	532,03	528,60	559,75	685,63	579,67
92	638,06	77,95	1,08	532,25	530,62	559,33	674,98	577,38
93	630,15	78,37	0,98	531,23	532,14	559,69	666,06	575,40
94	624,32	78,02	0,88	530,60	533,57	558,98	655,00	573,68
95	617,00	77,09	0,88	530,07	535,03	558,18	647,91	571,52
96	609,39	77,22	0,79	528,97	536,25	557,43	640,04	569,54
97	601,55	77,20	0,67	528,07	536,35	556,35	632,30	567,31
98	594,61	77,37	0,67	527,09	536,87	554,80	623,12	564,53
99	588,10	77,71	0,57	525,57	536,88	553,84	611,77	561,96
100	579,78	77,36	0,57	524,30	537,34	552,38	603,38	559,33
101	573,89	77,36	0,48	522,29	537,28	550,30	596,54	556,47
102	568,49	73,58	0,48	517,71	538,02	547,71	588,33	553,66
103	561,73	74,77	0,47	517,10	536,44	545,77	583,21	550,45
104	557,56	75,41	0,28	514,97	534,94	543,86	575,83	547,89
105	551,58	72,67	0,38	511,37	533,77	541,15	566,57	545,02
106	545,52	73,95	0,28	508,82	533,10	538,73	561,12	542,63
107	540,06	74,98	0,18	506,80	532,44	536,85	553,69	539,95
108	533,32	74,91	0,18	504,48	530,19	535,50	548,05	537,24
109	529,75	75,74	0,09	502,01	528,62	533,31	540,99	533,83
110	524,41	75,80	0,00	499,19	526,75	531,47	533,93	530,38
111	151,86	66,79	3,67	67,37	68,93	67,56	78,52	69,87
112	282,13	66,73	3,58	67,63	71,74	67,89	105,81	73,58
113	367,16	66,78	3,38	68,62	76,15	68,70	135,57	79,03
114	427,76	66,94	3,19	70,78	81,43	70,54	169,62	84,49
115	539,57	67,02	2,97	73,99	87,81	73,89	219,33	91,05
116	603,25	67,10	2,68	78,31	95,56	78,52	271,61	100,02
117	638,39	67,24	2,49	83,87	104,00	84,31	323,01	108,76
118	688,49	67,13	2,18	90,68	112,63	91,18	385,43	117,77
119	714,70	67,31	1,98	98,71	121,44	98,76	449,96	127,56
120	712,96	67,61	1,69	107,86	131,02	107,18	505,15	138,28
121	698,07	67,91	1,48	117,95	140,73	116,23	544,33	150,25
122	661,94	68,25	1,28	129,08	150,85	126,00	561,26	162,60
123	624,76	68,45	1,19	140,99	161,33	136,49	561,54	175,03
124	623,42	68,52	0,99	153,34	173,14	147,34	562,11	186,83
125	682,33	68,21	0,80	165,89	185,19	158,75	585,92	200,89
126	693,93	68,44	0,68	178,80	197,00	170,56	608,70	216,76
127	620,96	68,86	0,65	193,07	209,22	182,35	614,60	233,66
128	399,68	69,07	11,46	206,69	223,13	194,53	572,04	248,56
129	468,09	68,42	11,36	218,10	234,73	207,00	550,64	255,18
130	591,65	68,61	11,07	228,46	243,09	218,70	549,67	258,71
131	674,61	68,72	10,85	237,19	249,78	229,48	570,60	264,11
132	718,16	69,09	10,56	245,87	255,15	239,45	604,49	271,04
133	753,31	69,20	10,27	253,39	259,83	248,07	640,45	278,63
134	772,40	69,44	9,96	260,68	264,59	256,09	674,11	287,06
135	775,79	69,62	9,67	267,87	269,02	263,58	700,84	296,30
136	796,03	68,92	9,37	274,99	273,63	271,12	733,04	305,61
137	798,88	69,99	9,07	281,68	278,67	277,98	757,42	315,38
138	808,11	70,21	8,77	287,49	283,69	284,94	777,72	324,74
139	817,31	69,76	8,46	294,12	288,58	292,28	798,10	334,18
140	812,67	70,50	8,27	300,20	294,29	299,57	812,16	343,22
141	802,89	70,77	7,98	306,31	300,00	306,59	816,21	352,02
142	816,96	70,85	7,67	312,33	304,89	314,03	825,70	361,04
143	813,43	70,42	7,37	318,38	310,02	321,46	831,66	369,25
144	813,31	70,36	7,18	324,08	316,12	328,66	833,30	378,30
145	814,81	70,45	6,87	330,20	323,18	335,83	836,74	386,41
146	814,42	71,19	6,58	336,47	330,68	343,26	839,06	394,64

147	815,30	70,72	6,28	342,72	337,55	351,33	838,76	401,90
148	819,36	70,66	6,07	348,67	344,70	358,66	845,41	409,97
149	824,64	71,70	5,78	354,15	352,29	365,96	850,37	417,89
150	827,27	71,73	5,49	360,12	359,21	373,97	855,48	425,09
151	825,02	70,41	5,18	365,48	366,13	381,19	859,04	432,96
152	820,53	71,04	4,98	371,31	373,36	389,12	860,66	441,37
153	814,11	70,15	4,79	377,55	381,35	397,08	859,81	448,62
154	801,03	70,75	4,48	383,19	389,86	405,14	856,06	456,03
155	791,95	71,24	4,28	389,30	398,11	412,39	848,95	463,44
156	785,06	71,97	4,09	394,95	406,93	419,38	843,03	471,05
157	781,66	70,41	3,89	400,82	415,27	427,44	839,75	477,13
158	776,54	72,25	3,68	406,42	424,63	433,85	836,43	483,23
159	772,84	71,18	3,49	412,21	433,11	440,76	832,72	488,65
160	772,71	71,46	3,29	418,08	441,44	447,44	828,67	494,11
161	773,45	72,50	3,19	422,95	450,19	453,23	827,16	499,23
162	774,08	72,09	2,88	428,41	458,28	459,46	827,81	503,38
163	773,71	72,44	2,79	433,26	466,59	465,26	829,44	507,90
164	767,13	71,81	2,59	438,88	474,44	471,97	829,56	513,04
165	766,92	72,80	2,40	443,95	482,47	477,13	828,90	518,17
166	759,55	71,35	2,28	449,16	489,76	483,06	825,55	522,66
167	577,27	72,63	6,68	460,37	502,50	490,68	777,77	544,25
168	666,96	72,91	12,57	464,90	509,44	499,60	743,15	545,02
169	745,14	73,17	12,16	467,74	512,92	506,40	784,76	541,57
170	776,38	73,22	11,92	472,29	514,44	511,28	821,30	537,30
171	782,29	72,88	11,68	475,41	515,36	514,70	849,71	533,69
172	792,92	72,29	11,36	478,37	514,28	518,33	873,59	530,43
173	789,82	73,11	11,07	480,02	513,40	520,39	892,61	528,84
174	784,94	72,61	10,86	481,36	510,96	522,13	907,24	526,55
175	780,95	72,52	10,57	483,57	507,92	524,45	918,19	524,81
176	779,02	71,29	10,37	483,92	504,78	525,97	925,36	523,78
177	764,30	72,34	10,18	486,00	500,98	527,25	929,25	523,07
178	745,62	72,73	9,97	486,86	496,61	528,30	926,58	522,99
179	737,10	73,17	9,77	487,40	492,54	528,73	922,42	523,06
180	733,49	72,77	9,57	489,06	488,27	529,19	920,04	522,33
181	736,60	72,18	9,92	489,98	483,57	529,04	920,34	521,30
182	737,97	73,41	9,07	490,51	479,84	528,13	920,70	521,08
183	731,54	73,43	8,88	491,07	475,90	526,98	920,16	520,86
184	730,42	73,42	8,68	492,36	471,97	526,14	919,70	520,09
185	731,38	72,93	8,47	493,04	467,99	524,87	920,55	520,05
186	733,26	73,24	8,27	494,43	464,67	522,95	921,13	519,79
187	731,32	73,11	8,08	495,03	460,85	522,11	921,95	520,12
188	721,00	72,90	7,88	496,10	457,33	521,83	919,76	520,18
189	712,88	73,90	7,67	497,42	454,37	519,35	916,55	520,70
190	711,40	71,53	7,47	498,16	451,65	518,97	913,98	519,79
191	707,12	71,28	7,28	499,54	449,40	519,73	914,24	520,22
192	697,43	70,99	7,18	500,72	446,29	520,14	908,66	520,42
193	694,50	71,33	6,97	502,18	444,44	519,88	901,87	520,25
194	690,18	70,87	6,87	503,52	443,09	519,07	893,87	520,22
195	685,39	70,57	6,67	504,80	441,60	518,38	886,79	520,21
196	682,18	71,27	6,48	506,30	441,38	517,03	880,94	520,07
197	681,80	68,91	6,28	506,18	439,98	515,41	875,86	519,75
198	683,65	69,16	6,07	507,15	438,88	514,56	875,47	520,03
199	684,26	69,52	5,97	507,86	438,24	512,87	874,75	520,38
200	687,64	70,20	5,78	508,58	436,94	511,86	877,33	520,66
201	689,77	70,88	5,68	509,66	436,46	510,78	879,42	520,71
202	680,38	71,41	5,49	509,66	436,03	509,57	873,15	521,26
203	676,72	71,01	5,37	510,05	435,48	508,91	866,83	522,08
204	673,86	70,76	5,18	511,47	435,16	507,65	859,94	523,25
205	672,18	70,78	5,08	511,10	436,14	506,35	857,11	524,28
206	614,01	71,36	4,98	512,62	436,43	505,50	855,25	524,66
207	565,14	70,99	4,88	514,67	436,43	504,68	850,27	524,04
208	536,42	70,66	4,71	516,29	436,06	504,24	844,63	522,44
209	514,81	70,25	4,69	517,88	436,38	503,92	831,03	520,58
210	500,70	70,25	4,57	519,62	435,37	503,60	818,82	518,61
211	491,66	69,88	4,47	520,45	434,58	503,13	806,56	516,79
212	484,55	70,28	4,38	522,21	434,35	502,72	795,63	514,71
213	479,33	70,30	4,28	522,12	433,48	502,52	786,98	512,69
214	474,76	69,13	4,18	520,98	432,49	501,74	779,28	510,85
215	470,88	69,84	4,18	521,32	431,86	501,27	773,80	508,96
216	466,85	69,17	3,99	521,01	431,61	500,46	766,39	506,69
217	463,23	69,94	3,99	519,99	431,09	499,47	762,67	504,63
218	456,99	70,24	3,89	519,00	430,76	498,51	754,36	502,69
219	448,68	70,10	3,89	518,10	430,34	497,31	746,95	501,04
220	440,21	70,34	3,77	516,45	429,80	496,41	736,84	499,26
221	435,93	70,15	3,77	514,02	429,82	495,20	730,06	497,73
222	432,24	70,38	3,67	513,27	429,74	494,02	720,67	495,74

223	427,87	69,72	3,58	511,92	429,30	492,90	717,56	494,19
224	423,12	69,97	3,58	509,80	428,63	491,85	708,72	492,45
225	416,39	69,70	3,48	508,44	428,68	490,53	700,66	490,59
226	410,76	69,18	3,48	506,49	428,16	489,31	690,49	488,94
227	405,22	69,23	3,48	504,30	427,38	487,94	678,85	487,13
228	400,27	69,79	3,38	502,20	426,64	486,74	668,37	486,05
229	395,43	69,69	3,38	500,00	426,23	485,33	654,80	484,41
230	391,31	70,27	3,29	498,23	425,68	484,13	645,28	482,98
231	386,32	70,11	3,29	496,62	426,40	482,93	633,10	481,58
232	378,95	69,93	3,29	494,31	426,03	481,65	620,34	480,75
233	370,40	70,90	3,29	492,16	426,05	480,34	605,13	479,10
234	363,05	71,08	3,19	490,54	426,44	479,02	591,09	477,29
235	356,85	70,81	3,19	488,92	427,16	478,02	579,60	475,16
236	352,61	70,97	3,19	486,55	428,42	476,88	567,67	473,05
237	347,00	71,34	3,19	484,32	430,45	475,68	556,51	470,94
238	342,36	71,44	3,07	483,81	431,62	474,48	547,06	468,61
239	338,04	70,61	3,07	480,74	433,37	473,04	536,03	466,21
240	333,33	71,25	3,07	479,90	434,70	472,47	526,68	463,93
241	328,88	71,35	2,97	478,50	436,09	471,13	518,60	461,53
242	325,16	70,94	2,97	476,63	437,92	470,11	509,83	458,83
243	321,81	71,33	2,97	474,83	439,33	468,70	502,63	456,03
244	319,15	71,36	2,97	473,89	440,58	467,79	494,63	452,85
245	315,81	70,93	2,97	472,58	441,87	467,07	488,39	450,62
246	313,26	71,06	2,97	471,23	443,34	466,38	481,96	448,73
247	310,36	71,09	2,88	470,03	444,67	465,59	475,39	446,20
248	307,76	71,00	2,88	467,65	445,72	464,99	468,89	443,93
249	305,35	71,31	2,88	466,85	446,94	464,21	465,04	441,24
250	302,99	71,30	2,88	465,17	447,64	463,36	460,59	438,64
251	300,96	71,64	2,88	463,47	448,59	462,29	455,17	435,62
252	299,73	71,53	2,88	461,46	449,63	460,96	450,21	433,28
253	296,87	70,95	2,78	461,17	450,38	460,85	445,39	431,25
254	294,15	71,21	2,78	459,45	450,46	460,51	440,80	429,47
255	292,00	71,60	2,78	457,47	450,61	460,00	436,84	427,64
256	290,29	71,81	2,78	456,08	451,36	459,21	432,44	425,54
257	289,77	71,66	2,78	455,73	451,30	458,79	429,57	423,31
258	287,70	71,37	2,78	454,19	450,86	458,47	426,40	421,67
259	286,75	71,48	2,78	453,04	450,87	458,43	423,01	419,95
260	285,07	71,70	2,68	452,25	449,74	458,16	419,58	418,31
261	283,53	71,52	2,68	450,41	449,39	458,02	415,94	416,29
262	282,19	71,83	2,68	450,23	448,54	457,50	413,23	413,60
263	281,55	71,48	2,68	449,12	447,71	457,42	410,51	411,93
264	280,00	71,59	2,58	447,47	446,58	457,16	408,05	410,46
265	279,26	71,24	2,58	447,26	445,65	456,48	406,27	408,66
266	278,16	71,61	2,58	446,20	444,57	456,50	403,80	406,86
267	276,13	71,43	2,58	444,72	443,76	456,17	401,98	405,32
268	275,16	71,13	2,58	443,29	442,41	456,06	400,16	404,01
269	274,11	71,17	10,17	443,28	441,72	455,69	398,51	403,60
270	303,04	70,78	9,95	445,58	443,62	454,94	385,86	409,57
271	528,78	71,35	9,66	445,01	444,59	454,77	424,18	405,79
272	775,41	71,66	9,37	444,24	442,97	454,56	520,53	402,22
273	817,62	72,22	9,06	443,80	440,75	454,10	608,96	400,99
274	622,65	72,36	8,97	442,80	437,91	453,77	635,30	400,94
275	492,77	72,62	8,77	442,02	435,13	453,14	611,22	399,94
276	420,34	72,07	8,77	440,02	432,01	453,02	580,86	396,98
277	375,80	71,49	8,77	438,21	428,71	453,07	552,16	392,85
278	347,44	72,22	8,77	435,99	425,18	453,25	527,63	388,16
279	327,81	72,15	8,57	432,94	421,32	453,28	505,51	383,46
280	312,82	71,61	8,57	430,33	417,12	453,03	484,96	378,67
281	303,92	72,30	8,46	426,48	413,51	452,03	467,84	373,34
282	307,70	71,85	8,46	422,91	408,68	451,73	456,13	368,12
283	346,31	72,43	8,27	419,22	405,34	450,55	457,83	363,64
284	396,17	72,35	8,17	415,53	401,08	449,89	485,27	360,79
285	421,80	72,25	8,07	412,59	397,12	448,92	516,02	360,04
286	445,09	72,35	7,88	409,44	392,85	447,91	540,85	360,12
287	458,21	72,44	7,78	407,89	389,14	446,74	565,58	361,60
288	465,82	72,33	7,56	405,31	386,07	445,08	585,26	363,21
289	469,07	72,71	7,45	402,74	382,52	443,88	603,86	363,05
290	470,39	73,03	7,27	400,59	378,94	442,25	619,63	363,08
291	473,94	73,15	7,17	398,98	375,95	440,63	634,74	362,95
292	476,20	72,51	7,08	396,50	372,47	439,51	645,62	362,71
293	485,69	72,43	6,86	395,29	369,90	438,75	661,21	363,57
294	493,53	72,21	6,77	393,66	367,64	437,66	674,45	364,39
295	499,05	72,54	6,57	391,82	365,52	436,14	688,84	365,95
296	499,38	73,20	6,38	391,39	362,81	434,67	697,79	367,04
297	504,37	72,87	6,28	389,86	361,71	433,20	710,66	368,63
298	502,07	73,03	6,16	390,88	359,64	431,87	716,64	370,29

299	500,23	71,95	5,97	389,55	357,94	431,01	716,17	371,94
300	502,45	72,76	5,87	389,52	355,93	430,23	720,10	374,40
301	504,45	71,24	5,77	390,39	354,77	429,46	723,34	376,98
302	507,82	71,82	5,58	390,27	353,74	428,70	728,83	380,30
303	514,31	71,66	5,48	390,47	352,49	427,70	737,95	384,07
304	519,85	71,73	5,27	391,31	351,63	426,79	750,08	386,50
305	521,99	72,05	5,17	391,56	351,04	426,09	761,13	390,04
306	524,37	70,89	4,98	392,52	350,66	425,23	771,48	393,34
307	523,72	70,83	4,88	393,21	350,58	424,51	780,22	396,94
308	523,23	71,61	4,69	393,84	350,84	423,93	786,92	400,54
309	523,95	72,14	4,57	394,89	351,64	422,89	791,56	404,66
310	518,79	71,14	4,47	394,80	352,34	422,25	794,06	409,35
311	510,07	71,09	4,28	395,93	352,97	421,73	792,69	413,91
312	497,79	71,63	4,18	396,13	353,64	420,96	783,60	418,16
313	486,92	72,11	4,08	396,89	354,73	420,36	774,24	422,25
314	478,29	71,70	3,98	398,00	355,52	419,91	763,32	426,73
315	473,98	71,25	3,89	398,55	356,60	419,44	754,57	430,91
316	468,46	71,55	3,77	399,49	357,45	419,09	743,96	435,06
317	461,00	72,47	3,67	400,72	358,92	418,81	733,35	439,33
318	451,33	71,84	3,48	401,60	359,98	418,53	723,61	443,04
319	443,33	71,37	3,48	401,92	360,84	418,31	712,81	446,34
320	435,46	72,40	3,38	403,09	361,84	417,98	699,59	448,86
321	427,88	71,59	3,38	404,85	362,89	417,59	687,75	451,19
322	419,94	70,89	3,28	405,99	363,92	417,59	673,99	453,47
323	412,73	70,29	3,19	406,57	364,51	417,29	661,92	456,07
324	407,27	70,26	3,19	407,07	364,86	417,29	651,69	458,14
325	401,35	71,85	3,07	407,76	365,71	417,08	641,04	459,59
326	395,41	71,70	2,97	407,94	366,67	416,94	630,45	461,01
327	390,87	71,10	2,97	408,39	367,29	416,67	621,07	461,91
328	387,37	70,62	2,88	408,64	367,51	415,85	612,80	461,75
329	383,56	70,02	2,88	408,62	367,15	415,76	604,25	462,13
330	379,97	70,47	2,78	408,50	367,41	415,37	596,33	462,12
331	376,03	69,51	2,78	409,00	367,58	415,09	589,43	462,13
332	372,07	70,10	2,68	409,01	367,94	414,13	582,56	461,15
333	364,44	69,97	2,68	408,81	368,28	413,15	573,73	460,42
334	358,84	70,48	2,68	408,77	368,61	412,02	564,50	459,39
335	352,95	69,96	2,68	409,49	368,31	411,40	554,79	458,74
336	346,67	69,26	2,66	409,17	368,53	411,10	546,45	457,90
337	341,92	70,11	2,58	409,14	368,82	410,88	537,40	456,77
338	336,58	69,39	2,49	408,34	368,42	410,85	530,54	454,63
339	332,29	69,19	2,48	407,79	368,90	411,03	522,99	452,09
340	328,52	69,27	2,39	407,31	368,87	411,13	515,32	449,24
341	325,58	70,08	2,39	407,06	368,97	411,03	508,60	446,13
342	322,62	69,43	2,39	406,61	369,08	410,75	502,73	442,56
343	320,41	69,56	2,27	405,79	369,46	410,64	495,74	439,87
344	317,90	69,78	2,27	405,68	369,80	410,10	490,89	436,44
345	315,99	69,69	2,17	405,26	370,27	409,35	486,68	433,42
346	313,65	68,81	2,17	404,14	370,54	409,21	481,20	429,74
347	311,13	68,47	2,17	403,59	370,58	409,01	476,47	427,28
348	308,21	68,86	2,17	403,05	370,80	408,82	472,26	424,71
349	305,98	69,20	2,07	402,61	371,40	408,56	467,14	422,07
350	304,07	68,07	2,08	401,81	371,52	408,05	463,23	419,52
351	302,52	68,93	2,07	401,56	372,25	407,11	459,51	416,47
352	300,88	68,23	2,07	400,76	372,56	406,41	455,75	414,05
353	298,70	68,82	1,98	400,10	373,16	405,71	451,94	411,85
354	298,14	68,87	1,98	399,14	373,49	404,76	449,08	409,60
355	296,79	68,48	1,88	398,68	373,52	404,12	446,34	407,12
356	296,38	68,16	1,88	398,44	373,78	403,18	442,60	404,80
357	294,74	67,89	1,88	397,77	373,68	402,41	439,87	402,81
358	293,59	68,36	1,78	397,07	373,71	401,83	437,68	400,85
359	293,40	68,40	1,78	396,45	373,20	401,07	435,87	399,10
360	292,75	68,64	1,78	395,93	373,47	399,65	433,99	397,18
361	293,14	68,24	1,68	395,33	373,79	399,14	432,35	395,54
362	293,42	68,56	1,68	395,07	373,74	398,32	431,76	394,38
363	294,77	68,01	1,68	394,66	373,17	397,62	430,27	393,47
364	295,72	67,46	1,59	394,00	373,07	396,87	429,96	392,43
365	296,09	68,34	1,59	393,67	373,15	396,08	431,36	391,55
366	296,12	68,13	1,59	394,34	373,22	394,99	430,85	390,51
367	294,58	68,44	1,47	394,19	373,28	394,31	429,53	390,09
368	292,94	68,30	1,47	393,49	373,30	393,18	429,09	389,11
369	291,09	68,91	1,47	393,32	373,57	392,05	426,90	388,83
370	289,02	68,34	1,37	393,21	373,37	391,25	425,34	388,31
371	287,01	67,77	1,37	392,59	373,17	390,66	423,23	388,08
372	285,00	68,53	1,37	392,14	372,51	389,96	420,61	387,56
373	283,32	68,89	1,28	391,34	372,24	389,38	418,55	387,61
374	282,17	69,46	1,28	390,36	372,05	388,87	416,90	387,92

375	282,21	69,80	1,19	389,55	371,97	388,08	415,48	388,23
376	282,70	70,26	1,28	388,61	371,68	387,15	414,14	388,52
377	282,44	70,67	1,18	387,70	371,93	386,61	412,35	389,39
378	282,59	70,99	1,08	386,90	371,99	385,89	412,94	390,18
379	281,92	71,17	1,18	385,81	372,31	384,81	411,45	390,98
380	280,83	71,51	1,08	385,03	372,76	384,07	409,57	391,34
381	278,32	71,68	1,08	383,88	372,90	383,09	408,00	391,66
382	275,57	71,89	0,98	382,80	372,79	382,23	405,18	391,61
383	270,16	71,84	0,98	381,99	373,01	381,08	400,40	390,98
384	266,13	71,83	1,08	380,82	372,96	380,25	395,70	389,24
385	263,08	72,31	0,98	379,56	373,43	379,33	391,10	387,51
386	260,56	72,45	0,98	378,40	373,08	378,42	387,28	385,70
387	258,30	72,43	0,89	377,69	372,57	377,62	383,60	384,05
388	256,06	72,40	0,89	376,81	372,05	376,59	379,47	382,06
389	254,52	72,94	0,96	375,50	372,25	375,71	376,16	380,03
390	252,74	72,49	0,89	374,42	371,78	374,61	372,27	377,91
391	250,99	72,93	0,89	373,19	371,72	373,56	368,80	375,70
392	249,46	72,98	0,79	372,60	371,05	372,63	366,24	373,56
393	247,83	72,97	0,79	372,33	371,15	371,65	362,46	371,69
394	246,59	72,93	0,79	371,45	370,97	370,79	360,48	369,90
395	245,51	72,72	0,79	370,48	370,89	369,86	357,97	367,92
396	244,59	72,79	0,79	370,06	370,51	369,03	356,02	366,18
397	243,70	73,06	0,67	369,54	370,30	368,02	352,77	364,31
398	242,75	73,25	0,79	368,92	370,42	367,18	350,68	362,48
399	242,19	73,42	0,79	367,91	370,63	366,32	348,69	360,63
400	241,49	72,82	0,79	367,25	370,86	365,43	347,25	359,01
401	240,17	73,28	0,67	366,91	371,05	364,28	344,66	357,29
402	239,10	73,04	0,67	365,76	370,52	363,50	342,98	355,88
403	237,94	73,13	0,67	365,34	370,54	362,70	342,01	354,11
404	237,12	73,21	0,67	364,45	370,02	361,92	340,47	352,83
405	236,47	73,20	0,67	363,34	369,71	361,00	338,92	351,16
406	235,40	73,45	0,58	362,57	370,25	360,05	337,57	349,77
407	234,69	73,11	0,58	361,65	369,81	359,24	335,65	348,50
408	233,77	73,53	0,58	360,75	370,75	358,20	333,54	346,76
409	232,56	73,38	0,58	359,45	370,78	357,20	332,43	345,45
410	231,34	73,23	0,58	358,50	370,42	356,29	331,30	344,29
411	231,06	73,46	0,58	358,00	369,87	355,29	330,14	342,83
412	230,27	73,51	0,48	356,26	369,99	354,28	329,23	341,65
413	229,78	73,39	0,48	355,40	369,81	353,32	326,59	340,28
414	229,04	73,53	0,48	354,63	369,39	352,50	325,06	339,24
415	228,01	73,25	0,48	353,82	369,37	351,56	324,45	338,08
416	227,43	73,30	0,38	353,04	369,10	350,62	322,52	337,01
417	226,37	73,47	0,38	352,62	368,89	349,80	321,53	335,72
418	225,70	73,16	0,48	350,83	368,45	348,81	320,53	334,48
419	224,83	72,68	0,48	349,91	368,23	348,06	319,05	333,45
420	224,18	70,07	0,38	347,62	368,90	346,39	316,59	331,87
421	223,34	71,88	0,38	346,91	368,00	345,69	315,93	330,82
422	222,67	71,57	0,38	345,70	367,57	344,86	314,66	329,79
423	221,50	71,97	0,38	344,75	367,77	344,01	312,57	328,85
424	220,89	72,54	0,38	343,86	367,38	343,12	311,63	327,88
425	220,24	72,41	0,38	342,72	366,69	342,28	310,60	326,74
426	219,76	72,71	0,38	341,45	366,35	341,57	309,83	325,76
427	219,16	72,67	0,38	340,32	365,51	340,68	308,47	324,86
428	218,51	72,79	0,28	339,23	365,73	339,86	307,41	323,95
429	217,43	72,72	0,28	338,31	365,17	338,87	305,87	323,10
430	216,88	73,09	0,28	337,27	365,12	338,05	304,19	322,26
431	216,26	72,69	0,28	335,65	364,35	337,22	303,34	321,47
432	215,34	73,11	0,28	334,56	364,33	336,27	302,18	320,43
433	214,91	73,10	0,28	333,66	363,57	335,46	301,75	319,71
434	214,58	73,39	0,28	332,48	363,09	334,66	300,75	319,03
435	214,37	73,16	0,19	331,81	362,69	333,76	299,39	318,41
436	214,08	73,28	0,19	330,47	362,30	332,84	298,67	317,67
437	213,48	73,58	0,19	329,28	361,73	331,97	297,85	317,19
438	213,03	73,18	0,19	328,48	361,40	331,02	296,87	316,60
439	212,25	73,74	0,19	327,45	360,72	330,18	295,74	316,13
440	211,69	73,54	0,19	325,94	360,34	329,34	294,69	315,81
441	211,63	73,72	0,19	324,97	359,34	328,55	293,66	315,68
442	211,13	73,60	0,19	323,90	359,07	327,73	292,48	315,36
443	210,31	73,45	0,09	322,83	358,63	326,88	291,93	315,14
444	209,91	73,47	0,19	321,90	357,97	326,01	290,39	315,13
445	209,28	73,70	0,09	320,67	357,51	325,19	289,63	315,12
446	208,53	73,86	0,09	320,01	357,01	324,35	288,21	314,97
447	207,98	73,52	0,09	318,57	356,52	323,50	287,62	314,91
448	207,88	73,91	0,09	317,73	356,05	322,48	286,05	314,66
449	206,97	73,92	0,09	316,53	355,83	321,59	285,98	314,78
450	206,14	73,86	0,09	315,56	355,16	320,59	284,92	314,58

451	205,88	73,96	0,09	314,52	354,50	319,72	284,52	314,40
452	205,58	73,90	0,08	313,28	353,92	318,68	283,50	314,27
453	204,86	73,95	0,08	311,98	354,08	317,79	282,71	314,15
454	204,42	74,17	0,08	311,44	353,84	316,95	281,00	314,30
455	203,90	73,89	0,00	309,87	352,78	316,07	280,44	313,96
456	134,64	66,14	7,97	65,22	65,15	65,23	74,54	66,15
457	205,77	66,07	7,77	65,48	65,94	65,24	80,68	69,39
458	459,12	66,21	7,56	66,40	69,02	65,30	182,11	73,84
459	713,72	66,61	7,17	68,44	73,98	65,43	312,07	80,45
460	892,49	66,79	6,76	71,67	80,67	65,62	443,08	89,02
461	834,61	67,14	6,47	76,19	89,12	65,95	542,37	99,12
462	808,90	67,47	6,06	82,20	98,85	66,60	609,68	110,04
463	811,62	67,22	5,77	89,49	109,29	67,66	652,17	121,14
464	813,30	67,39	5,37	97,74	120,32	69,26	663,62	133,91
465	828,06	67,59	5,07	106,55	131,08	71,74	686,44	148,36
466	801,95	68,30	4,78	116,06	141,46	75,32	710,91	163,55
467	802,46	67,83	4,47	126,04	151,52	79,96	727,80	178,40
468	765,79	68,41	4,27	136,42	161,34	85,53	729,33	194,36
469	738,54	68,19	3,98	147,39	170,88	91,82	724,46	210,58
470	720,25	67,91	3,77	158,29	180,27	98,77	718,50	227,73
471	712,75	67,60	3,58	169,64	188,99	106,06	713,05	245,37
472	709,61	67,66	3,38	180,99	197,44	113,72	712,93	261,71
473	694,55	68,42	3,19	192,06	205,82	121,32	703,20	275,64
474	679,01	67,90	3,07	203,13	214,30	129,79	690,53	290,34
475	526,60	68,53	22,26	216,49	222,09	139,03	665,37	311,00
476	614,24	67,90	18,05	226,01	228,86	147,74	649,84	316,77
477	683,76	68,66	17,74	230,18	203,84	156,54	604,69	317,46
478	720,67	68,54	17,54	236,81	191,69	164,79	593,64	320,05
479	784,32	68,73	17,25	243,06	182,94	172,99	599,43	322,39
480	823,33	69,00	16,94	248,87	176,21	180,54	622,98	325,50
481	850,84	70,06	16,65	254,94	170,68	188,26	645,69	330,01
482	854,09	68,84	16,36	258,88	166,42	195,66	668,32	333,05
483	865,72	69,56	15,95	263,58	163,04	202,98	684,29	335,53
484	881,14	69,40	15,66	267,96	160,54	210,04	699,08	338,87
485	892,13	69,38	15,35	273,14	158,79	216,68	713,46	341,46
486	882,50	70,10	15,05	277,78	157,91	222,75	721,29	347,24
487	873,01	69,81	14,64	282,84	157,27	228,19	723,58	351,22
488	851,03	70,10	14,36	289,81	156,82	233,60	720,71	354,96
489	798,32	70,23	14,16	296,73	157,29	239,09	700,82	360,24
490	755,90	69,71	13,94	304,30	156,96	244,62	670,80	363,21
491	727,44	70,05	13,75	312,27	156,99	249,69	643,03	367,83
492	710,80	70,17	13,65	318,45	156,54	254,46	619,34	371,99
493	702,81	70,30	13,36	323,80	155,94	259,71	598,10	374,86
494	697,61	69,98	13,15	329,81	156,18	263,85	583,02	379,42
495	697,51	70,61	12,95	333,19	156,03	268,17	570,57	381,93
496	707,63	69,59	12,76	338,21	155,67	271,97	564,57	385,41
497	717,93	70,43	12,56	340,48	156,00	275,60	564,14	387,17
498	728,76	69,79	12,35	344,80	156,07	279,00	567,64	390,68
499	743,95	69,01	12,10	347,81	156,42	282,59	577,56	393,63
500	759,84	69,93	11,86	349,50	156,71	286,41	590,42	395,10
501	774,17	69,64	11,67	354,51	157,14	290,08	605,26	399,69
502	781,71	69,73	11,46	356,25	158,07	292,87	620,83	403,54
503	788,74	70,53	11,16	359,50	158,93	296,27	633,65	403,44
504	799,03	71,58	10,85	363,12	159,52	300,50	646,15	409,39
505	797,04	71,07	10,66	370,60	160,06	302,40	652,64	413,73
506	797,96	70,58	10,37	372,20	161,13	307,03	657,48	415,04
507	785,14	70,27	10,17	376,37	161,78	311,23	658,10	420,32
508	759,38	70,09	9,96	380,83	162,61	315,48	638,97	423,81
509	745,72	70,43	9,86	386,85	163,46	319,38	626,18	428,91
510	734,21	70,57	9,67	391,81	164,73	323,60	615,04	432,38
511	723,94	70,90	9,37	395,72	166,31	328,01	601,78	430,37
512	714,31	70,66	9,16	399,70	167,16	333,36	586,25	434,10
513	705,04	69,08	9,06	403,85	168,77	339,08	579,14	435,71
514	693,17	69,57	8,87	407,96	169,88	344,94	567,40	437,47
515	692,77	70,44	8,77	411,41	170,86	350,73	558,01	438,24
516	702,41	69,65	8,58	414,34	172,41	356,56	552,47	438,02
517	717,13	69,87	8,36	419,20	173,37	360,65	553,32	440,25
518	731,39	70,09	8,17	420,63	175,10	365,86	558,48	441,24
519	740,38	70,03	7,97	425,57	176,95	370,06	568,34	442,77
520	753,06	70,70	7,69	428,18	178,94	375,62	579,89	444,13
521	773,97	70,71	7,56	429,78	180,89	381,16	602,32	447,27
522	789,16	70,54	7,27	431,38	182,89	386,76	625,98	448,48
523	795,89	70,00	6,96	434,84	184,30	391,24	640,07	452,21
524	798,95	70,03	6,77	437,10	186,46	396,51	652,90	456,87
525	809,46	70,62	6,57	439,27	189,04	402,11	664,16	460,61
526	820,48	71,45	6,28	443,20	191,09	408,77	680,16	464,31

527	817,96	71,61	6,07	446,09	193,66	414,23	689,99	468,28
528	803,20	71,25	5,77	450,30	196,74	420,01	690,81	472,16
529	794,78	70,91	5,58	453,66	199,16	426,63	688,74	475,87
530	792,64	71,12	5,27	456,93	202,03	433,13	686,97	478,57
531	783,33	71,30	5,08	463,24	204,91	439,44	682,27	485,50
532	773,96	70,79	4,88	465,47	207,61	445,36	676,70	489,27
533	765,93	70,77	4,78	468,83	210,51	451,90	668,97	492,32
534	755,38	70,55	4,47	472,12	213,34	456,46	664,12	499,17
535	746,71	71,51	4,28	478,50	216,08	462,01	660,41	503,43
536	742,38	71,57	4,18	481,34	219,41	467,94	656,83	508,61
537	737,16	70,65	3,99	484,76	222,56	473,77	649,01	511,79
538	726,96	71,09	3,89	488,76	224,96	479,75	632,00	515,06
539	715,82	71,17	3,67	490,98	228,30	484,76	616,25	517,78
540	707,70	70,90	3,48	495,56	230,77	490,17	603,65	521,49
541	705,76	71,16	3,38	498,63	232,44	494,53	597,46	523,07
542	701,19	71,62	3,29	500,96	234,45	498,74	596,04	523,65
543	691,49	72,34	3,07	502,54	236,11	503,52	591,25	524,42
544	682,43	72,13	2,97	504,03	238,51	509,32	583,95	522,61
545	669,38	71,88	2,88	506,99	239,57	513,78	571,92	523,84
546	656,72	71,61	2,68	507,43	241,10	518,59	559,70	524,66
547	646,23	71,38	2,58	519,84	265,78	523,55	578,14	528,50
548	645,40	71,82	2,58	526,66	292,80	528,65	594,89	532,28
549	648,19	70,64	2,39	530,67	314,10	533,66	608,71	536,07
550	645,93	70,73	2,27	533,39	333,16	539,27	619,26	539,14
551	632,23	71,10	2,27	535,68	349,76	544,06	620,14	541,49
552	607,95	70,13	2,18	535,48	363,48	548,45	613,23	544,13
553	431,07	71,21	18,06	543,66	377,34	555,06	587,58	552,27
554	707,70	70,97	17,74	537,89	347,78	561,68	591,10	541,15
555	887,32	70,66	17,35	532,07	325,43	563,16	644,75	533,04
556	808,37	71,00	17,04	528,51	308,97	566,11	678,05	525,56
557	738,84	71,08	16,75	522,16	296,91	567,11	684,74	517,21
558	717,36	71,21	16,55	517,81	288,19	567,81	686,28	512,08
559	709,30	70,73	16,25	512,15	279,99	567,95	686,22	505,59
560	707,40	71,57	16,05	507,34	272,79	567,90	686,15	500,54
561	717,82	71,77	15,75	502,07	266,17	566,11	691,08	494,62
562	736,19	71,76	15,56	495,88	261,03	565,11	700,47	488,79
563	756,03	71,78	15,23	491,86	256,12	563,94	711,47	484,08
564	780,91	71,25	14,96	487,35	251,70	562,17	725,39	481,04
565	746,86	71,39	14,56	481,01	247,52	561,48	734,95	475,62
566	683,56	71,34	14,36	476,27	243,96	560,72	729,59	471,23
567	659,47	70,98	14,16	472,81	239,95	559,72	721,36	468,04
568	603,46	71,09	13,94	466,92	235,85	558,86	707,79	463,83
569	565,17	71,02	13,75	462,53	233,14	557,27	687,21	459,18
570	542,04	70,64	13,56	459,71	229,33	553,69	664,91	457,39
571	532,14	71,69	13,46	455,23	226,39	552,36	647,04	451,74
572	522,52	71,55	13,26	452,35	223,47	550,40	632,45	447,91
573	517,59	71,48	13,05	448,60	220,43	548,85	620,72	443,87
574	516,91	71,34	12,95	443,96	217,72	547,61	614,82	439,01
575	518,97	71,96	12,70	440,26	215,28	545,29	611,13	434,45
576	520,19	71,61	12,57	436,12	212,61	542,80	608,99	430,17
577	520,41	71,08	12,35	432,79	210,28	539,95	607,38	427,28
578	522,50	70,95	12,16	428,72	208,36	537,74	606,58	424,10
579	523,42	71,39	11,96	427,57	206,50	533,67	608,14	422,81
580	520,96	71,59	11,77	422,99	204,35	531,75	608,95	419,35
581	522,21	71,48	11,67	420,49	202,64	527,94	609,88	415,47
582	520,67	71,70	11,45	417,66	200,65	524,48	610,25	413,71
583	519,85	71,50	11,26	414,49	199,72	522,20	609,52	411,49
584	518,44	71,58	11,16	411,70	198,45	519,55	610,06	410,33
585	517,66	70,80	10,97	410,30	197,01	516,54	610,94	409,50
586	516,96	70,53	10,75	410,17	195,35	513,54	612,05	409,27
587	515,64	70,47	10,56	406,49	193,94	510,70	612,51	407,68
588	516,46	70,73	10,37	402,89	193,09	509,18	615,25	406,36
589	514,12	71,49	10,27	402,44	192,14	505,60	616,15	407,08
590	513,10	71,56	10,05	400,57	191,08	503,01	618,45	406,63
591	511,73	71,31	9,86	397,99	190,40	500,65	619,15	407,00
592	509,74	72,09	9,67	396,36	189,24	498,13	620,43	407,34
593	506,04	71,55	9,47	395,00	187,95	496,60	622,05	407,43
594	503,08	71,63	9,37	394,59	187,66	494,24	622,12	408,19
595	500,82	71,38	9,16	391,63	186,76	492,14	619,94	408,49
596	494,12	71,55	8,96	389,77	186,12	489,13	611,15	407,87
597	487,97	71,12	8,87	387,99	185,59	487,35	600,81	408,07
598	482,91	71,43	8,77	387,15	185,16	485,14	593,26	407,29
599	477,02	71,12	8,58	384,59	184,73	481,73	584,93	407,06
600	473,14	72,14	8,46	386,12	184,01	478,46	580,44	404,85
601	473,73	71,93	8,36	383,42	183,34	477,62	579,59	405,20
602	472,70	71,97	8,26	381,11	183,62	476,74	578,99	403,58

603	466,25	71,66	8,07	381,45	182,97	475,57	575,73	404,00
604	453,37	71,15	8,07	379,69	182,79	474,63	567,94	403,91
605	439,07	71,69	7,97	379,10	182,45	472,34	555,95	403,42
606	427,45	71,26	7,87	377,46	181,79	470,64	538,95	402,17
607	420,07	71,24	7,78	376,67	181,47	469,33	525,69	400,47
608	412,95	71,01	7,66	375,00	181,01	468,35	511,89	398,19
609	406,89	71,13	7,66	372,67	181,64	466,89	498,64	396,49
610	400,47	71,41	7,56	372,41	181,04	464,70	486,59	397,15
611	396,91	71,10	7,47	370,50	181,07	462,37	476,01	394,94
612	387,71	70,96	7,37	370,74	180,59	459,71	463,13	394,70
613	377,08	70,91	7,37	370,05	180,46	457,16	449,36	393,79
614	365,85	71,50	7,27	369,29	180,04	456,04	434,86	393,04
615	356,79	70,70	7,17	367,93	179,83	453,82	421,28	391,92
616	349,95	71,01	7,07	366,32	179,33	452,54	409,88	390,81
617	344,11	70,94	7,08	365,38	178,92	450,96	398,94	390,07
618	339,46	70,51	6,96	363,69	178,88	449,05	389,49	389,32
619	334,50	70,83	6,96	361,02	178,57	447,63	380,22	387,61
620	329,82	70,46	6,86	360,95	178,18	444,66	371,96	387,34
621	325,94	72,04	6,86	358,83	177,52	442,98	364,36	384,72
622	321,55	71,16	6,76	356,65	177,79	440,01	357,83	384,74
623	318,37	71,05	6,76	355,13	177,20	438,79	352,24	383,03
624	315,26	71,73	6,67	354,39	177,05	437,59	345,43	381,91
625	312,01	70,74	6,67	351,56	176,12	435,98	339,74	380,74
626	309,06	70,26	6,57	351,19	175,78	434,45	334,22	380,07
627	306,57	70,58	6,47	348,90	175,17	433,38	330,28	378,13
628	304,74	70,25	6,47	347,79	174,42	431,98	325,75	377,55
629	302,46	70,13	6,37	345,72	173,85	431,14	322,41	375,50
630	301,07	70,03	6,37	344,13	173,66	428,67	319,31	374,24
631	299,89	70,77	6,28	345,04	172,94	426,06	316,16	374,35
632	299,17	70,70	6,28	340,31	172,63	425,50	314,61	371,64
633	299,24	71,49	6,16	340,44	172,41	422,39	312,79	372,19
634	299,79	71,14	6,06	337,94	172,27	421,93	312,78	368,98
635	300,68	71,07	6,06	337,37	172,11	421,19	311,18	369,67
636	301,53	70,28	6,06	335,98	172,12	420,37	311,37	369,52
637	302,17	70,23	5,96	334,49	171,70	419,43	310,86	368,76
638	303,52	70,37	5,87	333,31	171,51	419,13	311,45	368,30
639	305,54	70,32	5,77	332,46	171,74	417,98	313,06	367,63
640	306,79	70,12	5,77	330,90	171,76	416,41	314,86	367,04
641	308,80	72,34	5,67	331,73	171,61	414,58	317,98	367,34
642	311,77	71,52	5,67	329,34	171,90	414,19	321,73	365,34
643	315,37	70,71	5,58	328,42	172,10	412,41	325,72	365,68
644	317,66	70,53	5,48	328,69	172,58	411,90	329,57	365,41
645	321,34	70,24	5,48	328,13	172,65	411,39	334,14	365,61
646	324,00	70,43	5,36	326,95	172,65	411,05	337,61	365,13
647	327,47	70,40	5,26	327,34	172,68	410,16	340,13	365,89
648	331,56	70,12	5,17	327,10	173,03	409,61	342,53	365,99
649	335,62	70,02	5,17	326,79	173,18	408,47	346,32	366,05
650	340,84	69,91	5,07	326,88	173,51	407,95	350,72	366,35
651	346,01	70,09	5,07	326,83	173,67	406,98	356,20	366,92
652	350,19	71,93	4,97	326,87	173,75	405,47	361,51	367,76
653	356,80	71,19	4,88	326,51	174,36	405,04	369,92	367,43
654	363,16	70,86	4,78	327,90	174,89	403,85	379,55	368,84
655	371,22	70,62	4,68	328,49	175,45	402,67	390,00	370,29
656	377,72	70,92	4,56	328,41	175,62	402,23	397,47	370,99
657	382,47	69,99	4,47	329,23	175,81	401,75	402,75	372,67
658	386,90	70,69	4,37	329,11	176,40	400,84	408,14	374,56
659	388,20	70,32	4,27	329,61	176,94	400,48	413,34	376,46
660	389,18	70,78	4,17	330,23	177,33	398,80	418,10	378,81
661	386,68	70,14	4,08	330,39	178,39	398,13	422,02	381,44
662	384,15	71,48	3,98	330,15	179,13	396,63	426,76	386,43
663	377,46	71,18	3,88	331,48	179,32	395,74	425,69	388,06
664	364,40	70,82	3,88	332,17	180,05	393,91	417,58	389,26
665	351,44	71,10	3,88	332,18	180,65	393,64	407,51	387,78
666	341,39	70,81	3,77	331,95	180,89	392,74	397,23	387,75
667	334,82	70,89	3,77	331,74	181,12	392,55	387,38	386,81
668	328,38	70,18	3,67	331,37	181,26	391,96	378,06	385,63
669	323,99	70,73	3,67	330,23	181,26	391,77	369,11	384,09
670	320,03	70,74	3,57	330,19	181,62	390,90	360,72	382,94
671	313,25	70,78	3,57	329,05	181,83	390,17	351,65	381,22
672	304,35	70,86	3,47	328,03	182,15	389,61	341,93	379,56
673	295,61	71,02	3,47	328,53	181,80	387,92	331,75	378,38
674	287,67	71,77	3,47	327,98	181,72	386,47	323,22	374,99
675	281,92	70,52	3,47	326,89	181,79	385,16	314,81	373,35
676	277,00	71,53	3,38	325,66	181,41	384,81	307,56	370,87
677	271,98	71,49	3,38	324,75	181,25	384,17	300,36	368,30
678	267,11	71,04	3,38	323,29	181,37	383,29	292,66	366,12

679	264,30	71,21	3,38	322,33	180,78	383,16	286,47	363,29
680	259,09	71,14	3,28	322,11	180,34	381,97	280,05	361,25
681	256,43	71,74	3,28	319,73	179,96	381,84	274,20	358,31
682	253,46	71,14	3,18	320,47	179,28	381,25	268,67	356,75
683	250,53	71,13	3,18	317,62	179,02	380,77	264,00	353,52
684	247,45	72,48	3,18	317,70	178,63	378,87	258,91	352,80
685	244,64	72,21	3,18	316,79	178,15	378,07	254,59	350,44
686	242,33	71,66	3,06	315,48	178,04	377,27	250,66	349,71
687	240,40	71,14	3,18	315,74	177,92	377,73	246,82	347,07
688	238,30	71,53	3,15	313,65	177,38	377,65	243,53	345,67
689	236,39	71,62	3,06	313,52	177,01	376,94	240,07	344,42
690	234,81	71,49	3,07	312,26	177,01	376,45	237,13	342,84
691	233,02	71,43	3,06	312,30	177,08	375,57	234,11	341,47
692	231,75	71,25	3,06	310,33	177,18	375,53	231,46	339,23
693	230,41	71,68	2,97	310,73	177,56	374,99	229,30	338,42
694	229,64	70,70	2,97	310,08	177,60	374,85	227,23	337,35
695	228,31	71,96	2,97	308,98	177,81	373,81	225,22	336,53
696	227,10	72,28	2,97	308,23	177,98	372,87	223,55	335,22
697	225,96	71,59	2,97	308,02	178,35	372,76	222,26	334,61
698	225,36	71,73	2,97	307,90	178,62	373,05	220,89	333,74
699	223,96	71,56	2,87	306,88	178,83	372,75	219,41	333,02
700	223,30	71,35	2,87	307,62	179,10	372,46	218,12	332,34
701	222,80	71,46	2,87	305,00	179,20	372,17	217,13	331,66
702	222,25	71,03	2,77	305,63	179,77	371,66	215,98	330,75
703	221,86	71,25	2,87	304,21	180,04	371,94	214,94	329,98
704	221,72	71,28	2,77	303,45	180,45	372,16	214,09	328,95
705	221,38	70,96	2,77	303,43	180,33	372,04	213,37	328,32
706	220,88	70,58	2,77	302,47	181,33	372,05	212,63	327,98
707	220,54	71,84	2,77	303,23	181,66	371,18	211,96	327,56
708	219,83	72,62	2,67	301,39	181,61	370,58	211,06	326,99
709	219,57	71,55	2,77	301,92	182,41	370,21	210,10	325,91
710	219,43	71,63	2,77	300,80	182,59	370,07	209,88	325,50
711	219,44	71,47	2,68	301,63	183,11	369,35	209,25	325,86
712	218,87	70,98	2,68	299,61	182,65	369,45	208,62	325,71
713	218,54	71,23	2,68	300,65	183,56	369,03	208,02	325,74
714	217,42	70,81	2,67	299,44	183,53	369,12	207,44	325,36
715	216,50	70,88	2,58	298,88	184,27	369,02	206,77	325,07
716	215,53	70,17	2,58	298,60	184,82	368,50	206,02	325,00
717	215,72	70,79	2,58	299,32	185,00	368,26	205,40	324,65
718	214,72	72,60	2,58	299,61	185,32	367,90	204,75	325,13
719	213,71	71,74	2,58	297,57	185,36	366,75	204,25	323,43
720	213,03	72,15	2,48	297,49	186,09	365,83	203,56	324,41
721	212,13	70,86	2,48	296,39	186,30	365,84	203,13	324,55
722	211,78	71,70	2,48	295,70	186,48	365,92	202,35	324,39
723	210,88	70,53	2,48	295,81	186,85	365,61	201,31	324,15
724	210,54	70,71	2,38	296,13	187,01	365,01	200,33	324,10
725	209,52	70,57	2,38	294,98	187,51	365,07	199,61	323,53
726	209,12	70,81	2,38	293,94	187,51	364,91	198,95	322,59
727	208,26	71,38	2,38	294,83	187,21	363,73	197,83	323,25
728	207,27	72,15	2,38	293,96	187,45	363,28	196,88	323,26
729	206,46	72,74	2,38	294,37	187,40	362,68	196,23	322,03
730	205,61	71,37	2,27	292,48	187,85	362,06	195,86	322,12
731	205,15	71,52	2,38	291,60	188,12	362,26	195,42	321,58
732	204,46	71,08	2,27	291,61	188,29	361,72	194,59	321,10
733	204,69	71,84	2,27	291,26	188,34	361,14	193,98	320,91
734	204,31	70,42	2,27	291,05	187,75	360,93	193,50	320,35
735	204,20	71,62	2,27	289,42	188,18	360,81	192,91	319,52
736	203,37	70,39	2,17	288,67	188,86	360,10	192,40	318,38
737	203,22	70,94	2,27	288,96	188,92	359,67	191,96	318,66
738	202,88	70,93	2,17	288,56	188,70	359,05	191,46	317,97
739	202,42	71,59	2,17	287,79	188,76	358,39	191,39	318,15
740	201,47	72,69	2,17	288,06	188,41	357,63	190,71	317,23
741	200,97	71,55	2,17	286,89	188,28	357,20	190,17	317,46
742	200,60	71,50	2,17	287,15	188,67	357,36	189,70	316,82
743	200,49	70,91	2,07	286,25	188,81	356,83	189,29	316,35
744	199,91	71,25	2,07	285,89	188,99	356,74	189,02	316,26
745	199,76	71,83	2,07	285,02	188,80	356,86	188,69	315,80
746	199,26	71,40	2,07	285,74	188,58	356,02	187,81	315,50
747	198,68	71,37	2,07	283,97	188,89	355,54	187,33	315,02
748	198,77	70,31	1,97	284,20	188,69	355,36	186,85	314,33
749	198,08	70,48	1,97	282,65	188,21	355,12	186,36	314,30
750	197,05	72,45	2,06	284,97	188,20	354,79	185,69	314,34
751	196,13	71,53	1,97	282,34	188,05	354,21	185,65	313,69
752	195,73	72,12	1,97	281,59	188,47	352,72	185,16	313,77
753	195,34	71,38	1,88	280,64	188,29	353,08	184,83	313,22
754	195,16	71,45	1,97	279,92	188,32	353,24	184,66	312,72

755	194,84	71,21	1,88	279,15	188,21	352,86	184,07	312,23
756	194,28	71,51	1,88	279,08	188,27	352,40	183,51	312,04
757	193,90	71,44	1,89	278,64	187,95	351,78	182,95	312,01
758	193,63	70,95	1,88	277,69	187,74	351,46	182,33	311,41
759	193,49	70,93	1,88	277,33	187,18	351,01	182,15	311,19
760	192,91	71,08	1,88	277,12	187,53	350,78	181,56	310,71
761	191,65	72,21	1,86	277,80	186,86	349,38	181,04	311,14
762	190,46	71,37	1,78	275,69	186,76	349,40	180,39	309,93
763	189,95	71,59	1,88	277,95	186,55	348,48	179,57	310,31
764	189,45	71,37	1,78	275,56	186,72	348,27	179,34	309,78
765	188,77	71,11	1,78	274,50	186,64	348,34	178,90	309,33
766	188,28	71,35	1,78	273,86	186,22	348,39	178,55	308,60
767	188,23	70,81	1,73	273,42	185,99	348,36	178,14	308,04
768	187,81	70,36	1,78	272,44	186,03	347,62	177,76	307,59
769	187,27	70,91	1,78	272,42	185,77	347,80	177,24	306,86
770	186,81	70,54	1,68	271,47	185,36	347,06	176,69	306,46
771	186,22	69,90	1,68	270,46	185,02	347,12	176,24	305,67
772	185,99	72,26	1,78	271,69	184,50	345,59	175,59	305,58
773	185,38	71,35	1,65	269,50	184,59	344,76	175,35	304,95
774	185,09	71,08	1,58	268,61	184,47	343,29	174,76	304,72
775	184,69	72,36	1,63	269,02	184,30	343,48	174,65	304,02
776	184,52	72,05	1,68	268,26	184,15	343,78	174,32	303,56
777	184,28	71,20	1,58	267,49	183,60	343,53	173,89	302,75
778	183,92	70,64	1,58	266,87	183,83	343,53	173,56	302,09
779	183,94	71,52	1,58	267,10	183,37	342,65	173,04	301,52
780	183,81	70,81	1,58	266,64	183,18	342,29	172,78	301,03
781	183,76	70,96	1,58	265,33	183,05	342,52	172,55	299,96
782	183,63	70,33	1,58	264,82	182,47	342,59	172,22	299,34
783	183,25	72,20	1,58	264,91	182,35	341,59	171,97	298,96
784	182,84	71,33	1,48	264,61	182,14	340,60	171,74	298,15
785	182,60	71,03	1,47	265,06	181,58	340,00	171,23	299,01
786	182,24	72,04	1,47	263,91	181,53	339,72	171,02	298,13
787	182,07	71,21	1,47	262,87	180,75	339,17	170,53	297,68
788	181,96	70,77	1,47	262,13	181,09	339,01	170,72	297,01
789	181,83	69,96	1,47	261,53	181,00	339,02	170,42	296,51
790	181,31	70,31	1,47	261,63	180,78	339,01	170,18	296,00
791	180,88	71,13	1,37	261,27	180,67	338,73	169,89	295,35
792	180,29	70,66	1,45	259,84	180,58	338,52	169,56	294,92
793	180,23	71,68	1,37	259,97	180,36	338,67	169,22	294,15
794	179,86	72,68	1,37	261,67	179,95	336,89	168,96	294,07
795	178,82	71,37	1,37	259,38	179,96	336,84	168,42	293,25
796	178,50	71,15	1,37	259,29	180,02	336,71	167,98	292,77
797	178,23	71,02	1,37	258,25	179,38	336,63	167,80	291,97
798	178,15	70,78	1,37	258,15	179,68	336,28	167,55	291,51
799	177,76	70,81	1,37	258,66	179,44	335,99	167,28	291,11
800	177,18	71,17	1,27	256,96	178,96	336,17	167,11	290,37
801	176,82	71,15	1,27	256,14	179,61	335,40	166,84	289,09
802	176,55	71,30	1,27	256,88	179,04	335,18	166,47	288,84
803	176,12	70,15	1,27	255,70	178,39	334,97	166,08	288,43
804	175,92	71,64	1,27	255,13	178,59	334,79	165,73	287,84
805	175,20	72,00	1,27	257,89	177,88	334,01	165,33	287,62
806	174,51	70,76	1,27	254,46	177,94	333,67	164,84	286,81
807	174,29	71,50	1,27	253,53	177,73	333,05	164,71	286,36
808	173,80	71,27	1,18	254,07	177,74	332,93	164,21	285,85
809	173,54	70,38	1,18	252,87	177,29	332,95	163,88	284,91
810	173,19	70,99	1,18	252,00	177,48	332,67	163,25	284,44
811	172,52	70,73	1,18	251,62	177,45	332,24	162,99	283,91
812	172,33	70,85	1,18	251,25	177,14	331,84	162,37	283,49
813	172,04	71,26	1,18	249,89	177,04	331,51	162,01	282,49
814	171,51	71,23	1,18	250,21	176,79	331,39	161,52	281,90
815	171,16	71,62	1,18	248,77	176,48	330,43	161,03	281,21
816	170,35	72,79	1,18	250,39	175,95	329,52	160,40	281,29
817	169,78	71,65	1,08	247,70	175,58	328,86	160,33	280,43
818	169,39	70,99	1,08	247,61	175,55	327,99	159,91	279,90
819	169,24	71,16	1,08	246,40	175,06	327,80	159,57	279,32
820	169,08	71,82	1,08	245,96	175,12	327,48	159,10	278,78
821	168,60	72,14	1,08	245,11	175,14	327,35	158,87	278,02
822	168,32	70,92	1,08	244,27	174,36	327,17	158,38	277,15
823	168,17	71,18	1,08	246,10	174,36	326,18	158,04	276,71
824	167,79	70,78	1,08	243,83	173,66	326,29	157,90	276,31
825	167,38	70,56	1,08	244,31	173,68	325,35	157,64	275,61
826	166,90	70,97	1,08	242,87	173,74	325,48	157,41	274,86
827	166,27	72,46	0,98	242,55	173,09	324,29	157,26	274,46
828	165,94	71,37	0,98	240,99	172,89	323,70	157,16	273,60
829	165,51	71,19	0,98	241,82	172,69	322,52	156,46	273,37
830	165,09	71,91	1,08	240,07	172,58	322,38	156,43	272,47

831	164,81	70,82	0,98	239,15	172,44	322,38	155,90	271,56
832	164,52	72,03	0,98	239,57	172,21	321,73	155,48	271,31
833	164,54	70,81	0,98	238,39	172,15	321,60	155,21	270,49
834	164,09	70,84	0,98	237,48	172,41	321,30	154,73	269,49
835	164,09	69,94	0,98	237,12	172,04	321,42	154,47	268,72
836	164,22	70,59	0,98	236,68	171,82	320,91	154,27	268,13
837	163,96	71,68	0,88	237,90	171,45	319,83	154,09	268,04
838	163,48	71,92	0,88	236,45	171,19	319,07	153,58	267,70
839	162,81	71,58	0,88	236,36	170,91	318,48	153,67	267,63
840	162,51	71,11	0,88	234,67	171,05	317,94	153,25	266,65
841	162,47	71,04	0,88	234,32	170,56	317,51	153,14	265,97
842	162,40	71,10	0,88	234,26	170,80	317,22	152,90	265,36
843	162,39	71,30	0,88	232,80	170,61	317,39	152,96	264,80
844	162,49	70,73	0,88	232,82	170,83	316,98	152,83	264,30
845	162,46	71,40	0,88	231,83	170,75	316,88	152,47	263,54
846	162,58	71,63	0,79	230,85	170,91	316,65	152,37	263,12
847	162,44	70,53	0,88	230,48	170,43	316,60	152,17	262,54
848	162,32	70,66	0,79	230,16	170,60	316,23	152,03	262,00
849	162,26	71,17	0,79	229,68	170,73	316,13	152,01	261,53
850	162,23	72,67	0,79	230,00	170,75	314,91	151,95	261,30
851	161,99	71,90	0,79	228,55	170,71	314,40	151,97	260,94
852	162,04	71,80	0,79	229,83	170,84	313,96	151,60	260,92
853	161,82	71,92	0,67	228,13	171,01	313,71	151,58	260,57
854	161,79	70,72	0,67	227,94	171,18	313,40	151,59	259,89
855	161,76	70,88	0,67	226,87	171,48	313,64	151,71	259,37
856	162,03	70,74	0,67	226,42	171,46	313,73	151,64	258,80
857	162,04	70,85	0,67	225,92	171,33	313,29	151,36	258,46
858	161,99	71,49	0,67	225,72	171,92	313,04	151,14	258,22
859	162,07	71,45	0,67	225,29	172,00	313,22	151,23	257,93
860	162,31	71,00	0,67	224,68	172,25	312,91	151,29	257,60
861	162,30	71,02	0,67	223,69	172,49	312,95	151,11	257,10
862	162,18	72,57	0,67	225,07	172,73	311,87	151,00	257,24
863	162,15	71,86	0,57	223,45	172,72	311,81	151,43	257,30
864	162,15	71,29	0,57	222,86	173,62	311,18	151,45	256,83
865	162,00	72,44	0,57	222,77	174,07	311,21	151,46	256,68
866	162,32	71,54	0,57	222,34	174,14	311,18	151,52	256,26
867	162,62	71,69	0,57	222,46	175,14	311,09	151,40	256,05
868	162,74	71,53	0,57	221,44	175,66	310,81	151,65	255,60
869	162,91	71,84	0,57	222,33	176,03	310,63	151,43	255,27
870	162,89	70,78	0,48	220,67	176,37	310,70	151,60	254,99
871	163,01	71,36	0,48	220,50	176,81	310,38	151,59	255,05
872	163,25	70,48	0,48	220,47	177,14	310,69	151,51	254,64
873	163,28	70,77	0,54	220,14	177,64	310,84	151,53	254,25
874	163,27	72,42	0,48	221,40	177,49	310,28	151,44	254,30
875	162,74	71,57	0,48	219,26	178,50	310,07	151,60	254,14
876	162,69	71,46	0,48	219,35	178,66	310,02	151,43	254,04
877	162,47	70,84	0,48	220,13	178,88	309,72	151,38	253,90
878	162,76	71,05	0,48	219,10	178,93	309,86	151,53	253,51
879	162,70	70,93	0,48	218,67	179,19	309,97	151,65	253,48
880	163,27	70,91	0,48	218,70	179,78	309,89	151,70	253,33
881	163,28	71,53	0,38	217,85	180,13	309,94	151,70	253,27
882	163,20	71,08	0,38	217,77	180,51	310,19	151,85	252,95
883	163,20	71,18	0,38	217,14	180,75	309,97	151,93	252,85
884	163,28	71,48	0,38	217,48	180,97	309,98	151,82	252,85
885	163,39	72,25	0,38	217,50	181,19	309,98	151,85	252,92
886	163,24	72,68	0,38	217,74	181,53	309,67	151,91	253,02
887	162,74	72,07	0,38	216,80	181,60	309,04	151,90	253,35
888	162,59	71,88	0,38	216,37	181,82	308,63	151,88	253,20
889	162,37	71,59	0,28	216,26	182,22	308,95	151,95	252,66
890	162,54	71,49	0,38	215,60	182,55	309,01	151,93	252,44
891	162,46	71,37	0,28	215,92	182,38	309,02	152,09	252,24
892	162,45	72,11	0,28	215,20	183,05	308,87	151,98	251,88
893	162,47	71,61	0,28	214,75	182,49	308,73	151,86	251,78
894	162,30	71,25	0,28	214,48	183,33	309,03	151,91	251,52
895	162,47	71,64	0,28	214,18	182,89	309,08	152,02	251,28
896	162,48	71,78	0,28	214,09	183,53	308,96	152,09	250,85
897	162,70	71,51	0,18	213,96	183,36	309,06	152,05	250,99
898	162,89	71,46	0,28	215,29	183,21	308,84	152,18	251,36
899	162,84	72,62	0,24	214,23	183,48	308,25	152,20	251,42
900	161,08	72,44	0,18	213,88	183,73	307,79	151,84	251,59
901	159,54	72,18	0,18	213,86	184,55	307,52	150,92	251,34
902	158,40	72,70	0,18	213,21	184,85	307,24	150,19	251,43
903	157,30	71,60	0,18	212,25	184,68	306,75	149,19	250,74
904	156,41	72,40	0,18	212,85	184,65	307,18	148,31	250,44
905	155,60	72,08	0,18	211,60	184,68	307,05	147,62	249,62
906	154,85	71,32	0,18	211,12	184,67	307,08	146,94	248,99

907	154,12	71,41	0,18	210,30	184,64	307,16	146,16	248,26
908	153,61	71,29	0,09	210,27	184,52	307,19	145,39	247,43
909	153,05	72,23	0,09	209,48	184,50	306,79	144,73	246,64
910	152,49	72,71	0,09	209,25	184,54	307,15	144,15	245,82
911	151,91	72,47	0,09	208,99	184,38	307,03	143,44	244,90
912	151,17	72,85	0,09	209,38	183,84	306,60	142,70	244,70
913	150,45	72,67	0,09	209,45	183,73	306,09	142,22	244,39
914	149,97	72,30	0,09	209,11	183,52	305,32	141,60	243,71
915	149,54	72,70	0,09	207,51	183,61	305,09	141,37	243,05
916	149,18	72,15	0,09	206,90	184,10	305,28	140,89	241,49
917	149,15	72,02	0,09	205,86	184,16	304,90	140,40	240,40
918	148,92	72,43	0,09	206,02	184,09	304,98	140,11	239,52
919	148,69	71,78	0,09	205,40	184,06	304,38	139,82	239,08
920	148,28	72,58	0,09	204,90	184,05	304,12	139,37	238,20
921	147,77	71,81	0,00	203,84	183,94	303,98	139,45	237,00
922	114,80	69,01	7,46	69,26	69,51	69,30	73,65	70,11
923	195,32	68,92	7,27	69,44	70,23	69,27	84,07	72,08
924	432,92	69,25	6,95	70,43	72,67	69,29	150,51	76,77
925	589,78	69,30	6,66	72,80	77,80	69,30	244,83	86,81
926	691,99	69,49	6,37	76,39	85,62	69,35	352,81	99,27
927	772,34	69,95	6,06	81,10	95,76	69,55	449,99	112,33
928	808,42	69,94	5,57	86,82	107,12	69,89	534,81	127,33
929	936,66	70,40	5,07	93,59	118,72	70,40	619,39	143,15
930	977,44	70,70	4,68	101,78	130,00	71,13	692,64	157,71
931	880,98	70,73	4,27	111,33	140,63	72,17	734,22	171,59
932	849,21	71,27	4,02	121,98	151,25	73,98	763,06	185,66
933	800,33	71,23	3,67	133,16	161,09	77,26	767,70	201,01
934	757,97	70,83	3,47	144,77	170,50	82,17	760,15	218,89
935	722,40	71,09	3,28	156,39	179,66	88,36	740,58	236,50
936	719,91	71,61	3,07	167,30	188,81	95,48	723,68	251,62
937	693,79	71,20	3,18	180,53	197,32	103,23	704,96	268,01
938	522,04	71,44	17,54	194,43	205,38	111,01	665,06	281,56
939	641,55	71,40	17,35	203,90	193,61	118,94	629,75	286,67
940	670,01	71,79	17,04	212,37	182,69	126,47	608,18	290,71
941	708,53	73,32	16,85	220,28	173,70	133,43	604,01	295,65
942	716,36	73,15	16,55	227,16	166,78	140,13	604,05	301,58
943	738,33	72,05	16,35	233,15	161,16	146,70	611,78	307,84
944	777,62	73,82	16,05	238,68	156,12	153,16	630,71	314,03
945	768,01	73,41	15,851	243,3867	152,33	159,60	640,10	320,480194
946	751,11	73,50	15,657	247,5495	149,33	165,73	635,79	327,835815
947	759,30	74,04	15,341	251,3398	147,10	171,66	641,89	335,417542
948	760,53	73,44	15,068	254,4004	145,21	177,35	654,99	342,858032
949	764,68	73,49	14,859	257,2502	143,92	182,80	661,47	351,439453
950	777,46	73,20	14,647	260,0938	142,89	187,96	667,65	358,86203
951	793,87	73,20	14,353	262,4066	142,31	193,02	673,19	366,559021
952	823,91	73,28	13,950	264,8609	141,80	197,69	692,56	374,361572
953	863,04	73,21	13,752	267,2152	141,33	202,15	714,66	381,783508
954	891,07	74,00	13,362	269,2332	141,11	206,75	742,02	389,572998
955	904,61	73,68	13,048	271,5030	140,98	211,20	763,21	396,948334
956	923,82	73,39	12,760	274,1461	141,21	215,90	782,13	404,641144
957	894,84	75,40	12,348	276,7242	141,76	220,40	786,84	411,143982
958	823,57	73,28	12,157	280,0150	142,29	226,19	762,46	417,115417
959	781,98	73,44	11,959	282,1048	142,97	231,43	728,23	420,325165
960	756,83	73,61	11,768	285,7132	143,02	236,78	697,77	422,818054
961	742,06	73,10	11,552	288,5643	143,47	242,89	671,56	425,223846
962	730,21	72,99	11,357	292,1749	143,51	248,30	648,42	426,860382
963	720,52	73,83	11,164	295,6603	143,64	253,74	627,42	428,625549
964	715,05	73,68	10,968	299,1758	143,85	259,25	612,23	430,187897
965	713,89	74,07	10,756	303,2276	144,08	264,27	600,26	430,648895
966	710,09	74,52	10,563	306,5736	144,40	269,86	591,71	432,256104
967	705,26	73,45	10,366	310,4447	144,29	275,07	582,49	432,88678
968	695,03	75,21	10,267	313,8712	144,34	279,57	575,12	432,895813
969	663,25	74,14	10,053	318,1422	144,78	284,68	556,68	433,85437
970	638,35	74,29	9,956	321,9344	144,80	289,36	535,65	433,975403
971	611,95	73,66	9,860	324,8204	144,74	292,99	514,49	433,995209
972	591,58	73,72	9,762	327,7881	144,31	296,79	492,95	433,545135
973	580,29	74,01	9,567	330,0426	144,11	300,16	474,59	433,15799
974	575,87	74,41	9,470	332,2205	143,89	303,51	460,84	433,344147
975	575,30	74,06	9,372	333,5050	143,61	306,89	450,92	432,761047
976	578,80	73,81	9,258	336,3591	143,24	310,04	444,41	433,082642
977	583,12	73,98	9,158	337,2726	143,11	312,73	441,17	432,106781

978	587,50	73,88	9,063	338,4003	142,87	315,97	440,16	431,741089
979	592,16	74,61	8,868	340,1169	142,60	318,79	440,86	431,900024
980	595,30	74,35	8,771	341,5612	142,50	322,42	432,91	432,867615
981	613,10	73,89	8,576	342,8526	142,45	325,24	433,12	432,645111
982	642,45	74,63	8,457	345,0112	142,85	328,83	442,90	433,763794
983	663,45	75,25	8,264	346,2970	143,48	332,44	457,96	436,058868
984	667,53	74,58	8,068	347,7302	144,22	335,80	468,87	438,722992
985	676,24	74,50	7,970	349,2222	145,56	339,21	479,65	441,774048
986	675,95	74,82	7,776	350,8180	146,79	342,28	485,97	444,867371
987	662,46	74,16	7,564	352,5514	148,23	345,80	485,95	448,133698
988	652,18	74,38	7,466	354,6110	149,36	349,41	484,06	449,753052
989	648,05	73,72	7,368	356,4900	150,99	352,99	482,60	453,700745
990	641,16	73,60	7,173	357,0091	152,39	357,69	479,26	455,247314
991	637,10	74,42	7,071	358,3167	153,61	362,29	474,70	457,612396
992	637,00	74,69	6,862	359,5232	155,03	366,91	471,12	459,601501
993	637,09	75,16	6,767	359,8923	156,04	372,39	471,19	461,106842
994	631,16	74,66	6,572	361,1271	157,10	377,35	470,49	462,217102
995	617,73	73,75	6,571	361,7491	157,78	382,92	467,68	462,947296
996	611,23	73,91	6,376	363,1108	158,90	388,57	463,02	463,319519
997	614,16	75,40	6,279	364,7084	160,01	393,65	460,41	462,761078
998	617,62	75,17	6,066	365,5481	161,92	399,18	459,99	463,473267
999	619,52	74,51	5,967	368,8467	163,50	404,20	460,14	463,486816
1000	622,06	75,27	5,871	370,4700	165,34	409,17	462,85	462,615417
1001	616,44	74,52	5,774	373,6790	167,68	414,26	462,94	462,559387
1002	611,48	75,04	5,580	375,3925	169,89	418,38	462,74	461,342987
1003	609,36	75,28	5,483	378,5758	172,18	422,58	461,12	461,507141
1004	614,22	74,74	5,364	380,6324	174,34	427,24	461,59	461,357025
1005	615,90	74,86	5,269	382,7619	176,64	431,39	462,71	461,204681
1006	617,68	75,39	5,072	384,3407	178,88	434,82	463,39	460,427246
1007	614,58	75,39	4,976	385,9406	181,71	438,23	462,81	460,295837
1008	606,96	76,57	4,878	386,3820	184,55	441,58	460,41	460,382355
1009	600,18	74,95	4,684	387,5325	187,38	445,06	454,99	460,387482
1010	592,98	74,79	4,567	387,9333	189,85	447,84	448,88	459,874878
1011	590,15	75,01	4,471	388,0144	192,78	450,58	443,48	459,012878
1012	583,44	74,97	4,373	389,8390	195,29	452,83	437,36	459,116608
1013	577,60	74,43	4,276	390,4686	198,10	455,19	432,13	459,711853
1014	573,36	74,82	4,179	390,9482	201,06	457,80	426,76	460,417145
1015	568,76	74,17	3,985	391,3861	203,84	459,53	420,76	460,62027
1016	567,36	75,26	3,969	392,5892	209,00	461,52	418,13	461,706085
1017	572,21	75,53	3,770	406,1535	242,18	464,94	454,53	463,885071
1018	582,47	75,25	3,672	410,2791	262,97	468,03	475,57	467,497986
1019	590,84	74,83	3,575	413,7729	281,06	470,57	494,73	470,884277
1020	587,92	75,29	3,478	416,9845	296,87	472,75	508,57	473,33548
1021	585,88	75,29	3,381	419,4687	310,70	474,81	522,18	475,83844
1022	583,97	74,71	3,282	421,7588	324,13	476,79	530,78	477,755585
1023	570,46	74,54	3,185	424,1546	336,76	478,64	534,78	479,526184
1024	560,66	74,76	3,184	424,4720	347,27	480,14	535,08	480,926941
1025	556,21	74,64	3,069	426,4580	357,66	481,40	535,19	482,355194
1026	551,88	74,85	2,971	426,6148	367,22	482,53	535,12	483,830627
1027	550,18	74,94	2,873	427,6199	376,37	483,84	534,74	484,92337
1028	547,81	74,03	2,777	427,2123	385,05	484,98	535,33	485,711273
1029	546,29	74,62	2,679	426,3128	392,56	484,89	535,60	486,87262
1030	541,15	74,31	2,679	426,5811	399,61	485,48	535,45	487,972839
1031	536,31	74,46	2,679	426,9234	407,19	486,17	534,25	488,260315
1032	534,78	74,47	2,581	427,2275	414,75	487,19	532,63	488,662231
1033	537,30	74,23	2,485	426,0714	421,35	487,81	533,53	488,481506
1034	541,01	73,74	2,485	426,7884	428,15	488,82	536,16	488,269989
1035	546,29	74,22	2,387	425,7076	433,48	488,80	537,27	487,961731
1036	549,91	73,90	2,386	425,0742	439,06	489,26	539,72	487,624023
1037	549,75	74,26	2,270	424,0928	445,24	489,91	541,30	486,876923
1038	404,51	73,94	15,439	429,3801	450,22	492,30	519,51	499,170685
1039	566,71	74,16	18,339	426,1251	429,16	497,41	527,36	489,65451
1040	777,54	74,60	18,046	419,9848	386,90	498,39	559,55	482,319
1041	722,72	74,32	17,833	417,3141	361,33	498,81	583,21	477,631958
1042	624,52	75,07	17,587	414,2983	343,17	499,66	585,98	473,284515

1043	598,70	75,11	17,443	411,1552	329,49	499,97	584,31	469,686615
1044	592,71	75,36	17,154	407,6114	318,12	500,40	583,91	465,815521
1045	600,57	75,59	16,944	404,4365	308,19	500,23	589,13	462,26059
1046	600,76	75,48	16,846	399,6068	300,12	500,50	594,46	457,426941
1047	598,41	75,69	16,551	396,4507	291,90	499,81	596,60	453,239075
1048	597,03	74,28	16,359	392,2474	284,85	499,20	599,03	449,676727
1049	595,11	75,59	16,140	387,8781	278,57	498,07	599,03	446,545654
1050	593,10	75,31	15,945	384,2639	272,74	497,53	599,57	442,720123
1051	591,67	75,41	15,757	379,8726	267,41	496,24	600,29	439,494385
1052	590,22	74,93	15,556	375,4272	262,85	493,86	601,00	436,602295
1053	590,37	75,45	15,342	372,1090	258,21	491,99	600,97	432,655945
1054	589,58	74,93	15,149	368,4315	254,26	490,03	601,34	430,894928
1055	587,59	75,19	14,953	365,0098	249,88	487,83	601,22	428,211884
1056	587,33	75,80	14,802	362,5605	245,94	485,83	600,46	424,828583
1057	588,18	75,59	14,544	359,1173	242,19	484,03	601,47	422,050934
1058	590,70	75,04	14,448	355,9859	238,45	480,58	603,68	420,795197
1059	597,36	74,95	14,253	354,3569	235,11	478,04	607,33	419,062592
1060	608,75	76,68	14,064	351,0521	231,96	475,31	615,95	416,771027
1061	618,43	74,85	13,750	349,6135	229,32	473,79	626,03	415,835968
1062	624,45	75,39	13,557	347,9435	226,33	471,39	635,55	414,696594
1063	630,33	75,75	13,359	346,5270	223,70	469,13	643,74	414,90094
1064	636,15	75,75	13,144	344,7253	221,19	466,71	652,26	415,247894
1065	640,04	76,03	12,949	343,7941	219,35	465,18	657,86	414,43338
1066	642,13	76,02	12,759	342,7906	217,17	463,15	663,19	414,889893
1067	644,37	74,96	12,464	341,6143	215,07	460,89	668,34	415,217926
1068	648,30	75,53	12,351	340,3089	213,14	458,28	672,12	416,835907
1069	653,19	75,81	12,058	340,3759	211,33	456,42	676,80	416,963959
1070	656,41	75,96	11,864	339,7266	209,84	454,59	678,80	417,734314
1071	656,45	74,34	11,666	339,3748	208,54	452,80	679,97	418,249634
1072	657,80	75,08	11,453	339,2673	206,96	450,92	679,88	418,803467
1073	657,26	76,13	11,260	339,1631	205,39	448,75	680,69	419,992859
1074	655,49	74,78	11,065	338,5321	204,18	447,05	681,10	420,339966
1075	653,63	75,65	10,753	338,5439	202,98	445,77	680,46	420,962036
1076	653,19	76,07	10,557	338,8302	201,59	444,16	678,73	422,540649
1077	650,75	75,11	10,364	338,8605	200,65	442,72	678,78	424,10556
1078	643,13	75,78	10,171	338,8274	199,76	441,22	679,43	424,709198
1079	639,42	75,61	9,958	339,7783	198,65	440,27	678,04	426,342987
1080	635,93	76,13	9,760	340,2381	198,00	439,02	677,38	427,066528
1081	631,35	75,91	9,566	340,4067	197,23	438,27	676,41	428,072388
1082	629,54	75,42	9,375	341,3837	196,53	437,34	674,43	428,768372
1083	628,20	75,61	9,158	342,2156	195,97	436,60	673,51	429,726013
1084	626,52	76,07	9,062	342,8339	195,51	435,77	672,38	429,917023
1085	626,89	76,04	8,869	344,1153	195,14	435,31	670,51	430,540833
1086	624,67	75,65	8,672	345,3604	194,86	434,88	669,48	431,766754
1087	623,82	75,07	8,459	346,8839	194,46	434,53	669,49	433,050995
1088	616,75	75,62	8,263	347,6612	194,21	433,95	666,66	434,198761
1089	611,11	75,87	8,166	349,3652	193,68	433,60	662,22	435,354126
1090	607,02	74,83	7,974	351,5201	193,46	433,18	658,04	437,321716
1091	597,78	75,78	7,778	353,0877	193,05	432,95	653,80	437,534851
1092	585,70	76,77	7,660	354,6194	192,94	432,25	648,07	439,132172
1093	567,79	76,70	7,563	356,2639	192,65	432,55	633,32	440,033203
1094	547,64	75,49	7,368	358,1365	192,67	433,10	611,01	441,876556
1095	532,20	75,87	7,369	360,1700	192,75	433,27	588,88	443,465088
1096	520,52	76,20	7,176	361,1982	192,67	432,87	569,38	444,821045
1097	509,81	75,39	7,116	362,7516	192,46	431,87	551,06	446,445404
1098	501,96	76,66	7,076	363,4274	192,30	431,76	535,97	447,631805
1099	495,61	75,58	6,862	364,7053	191,81	431,41	521,81	448,198151
1100	489,67	75,60	6,863	365,8264	191,58	430,74	510,12	448,655029
1101	485,73	75,42	6,669	367,0645	191,00	430,40	501,73	449,621124
1102	483,33	76,80	6,667	367,3371	190,40	430,21	497,29	450,44577
1103	478,65	76,10	6,571	367,2187	190,00	429,66	490,58	451,959229
1104	472,78	76,18	6,474	368,4270	189,35	429,32	481,50	452,306549
1105	468,63	75,28	6,376	368,2589	189,14	428,49	472,49	453,208252
1106	461,73	75,97	6,280	367,5611	188,64	427,89	463,70	454,277008
1107	453,86	76,34	6,279	367,9841	188,76	427,71	453,25	454,598267

1108	444,70	75,80	6,161	367,5398	188,53	427,26	442,33	455,568665
1109	437,50	76,20	6,065	367,3024	188,56	427,15	432,63	456,323425
1110	429,82	76,74	6,064	366,3127	188,28	426,46	423,61	455,670868
1111	424,83	75,65	5,968	366,0922	188,21	425,92	415,10	455,884705
1112	421,33	75,67	5,871	364,6399	187,88	425,48	407,92	455,694489
1113	419,89	75,50	5,773	364,3310	187,67	424,98	402,43	454,704681
1114	418,97	75,40	5,772	363,6900	187,84	424,57	398,61	453,612762
1115	417,86	75,01	5,676	363,2766	187,74	423,93	394,51	452,837952
1116	415,57	75,94	5,579	362,3839	187,70	423,15	390,65	450,925842
1117	414,56	76,44	5,480	360,4930	187,49	422,21	387,62	449,032654
1118	413,40	76,96	5,481	359,7771	186,82	421,69	384,53	448,340271
1119	412,25	75,88	5,363	358,3731	185,98	420,89	382,30	447,353241
1120	411,45	76,55	5,269	357,3432	185,10	420,56	381,01	447,04184
1121	410,92	75,78	5,267	355,8545	184,33	419,90	380,72	446,078766
1122	411,66	76,11	5,168	353,9784	183,52	418,66	380,43	445,71637
1123	411,19	75,80	5,170	352,5393	182,72	417,99	379,84	445,200378
1124	411,96	76,15	5,073	351,4070	181,78	416,95	379,31	444,537781
1125	411,57	76,26	4,975	350,8575	181,48	416,33	378,40	444,741119
1126	411,19	77,33	4,975	349,5470	181,06	415,75	377,02	444,671387
1127	409,68	75,77	4,879	347,8659	180,56	414,62	375,67	444,157379
1128	403,65	76,46	4,781	346,1045	180,20	413,78	373,23	444,141846
1129	400,09	76,52	4,781	345,9636	179,77	413,03	369,27	444,066742
1130	395,69	76,87	4,683	344,3254	179,60	411,60	365,72	443,437134
1131	392,21	76,40	4,683	345,0460	179,38	410,94	361,63	443,239716
1132	389,85	77,00	4,565	343,8643	179,25	410,19	358,05	442,829559
1133	388,02	76,87	4,468	341,7279	179,09	409,29	354,81	441,946594
1134	385,32	76,59	4,467	341,0449	178,43	408,12	351,39	440,195251
1135	377,97	76,08	4,372	339,8811	178,48	407,11	346,75	440,722565
1136	373,34	77,63	4,274	338,4284	178,39	406,43	342,36	439,260406
1137	370,26	75,63	4,275	338,2310	178,53	405,53	338,42	439,161438
1138	368,87	76,21	4,176	336,7823	178,41	404,34	334,88	438,285828
1139	367,78	76,87	4,177	335,0267	178,20	403,24	332,16	437,202301
1140	366,90	76,40	4,080	334,7108	178,29	401,39	329,73	436,419434
1141	366,45	76,65	4,078	332,9633	178,41	401,38	327,82	435,166199
1142	366,06	76,75	3,982	333,1996	178,56	400,01	326,14	434,264709
1143	366,24	77,22	3,982	331,4974	178,56	398,71	325,08	433,328735
1144	366,88	75,69	3,884	330,4409	178,67	397,89	324,22	432,567413
1145	367,13	76,92	3,884	329,5860	178,91	397,03	324,11	431,752228
1146	368,25	76,19	3,769	328,6635	178,76	396,08	323,57	431,027466
1147	369,20	76,98	3,671	328,2840	178,70	394,93	323,40	430,724731
1148	370,37	77,01	3,670	327,0558	178,79	394,46	323,30	430,792358
1149	371,77	77,30	3,573	326,3665	178,93	393,48	323,34	429,728699
1150	373,50	76,05	3,476	325,5361	179,09	392,28	323,67	429,128296
1151	374,34	76,90	3,475	325,0217	179,34	391,59	323,66	428,392273
1152	376,03	77,33	3,379	324,2085	179,46	390,67	324,59	427,205811
1153	376,85	77,61	3,378	324,1222	179,59	389,72	324,86	426,920776
1154	376,15	76,68	3,281	324,3181	180,06	389,06	325,31	427,601868
1155	374,32	77,07	3,281	323,0697	180,13	388,16	324,84	426,943451
1156	372,27	77,89	3,183	323,3578	179,84	387,38	323,58	426,516113
1157	370,44	77,28	3,184	322,5624	180,19	387,57	322,08	426,041901
1158	369,54	76,63	3,067	323,2580	180,43	386,60	319,73	426,184631
1159	366,86	76,64	3,067	321,8429	180,27	386,36	318,29	424,822876
1160	364,24	77,82	2,970	321,4919	180,38	385,59	316,81	424,33075
1161	360,40	76,59	2,872	321,5483	180,20	384,46	314,34	424,133392
1162	357,95	78,12	2,872	321,5799	179,84	383,45	312,31	423,320374
1163	355,22	75,66	2,871	320,2587	180,27	382,89	309,48	422,554932
1164	354,11	76,06	2,775	320,4321	180,28	382,48	307,65	421,448578
1165	350,94	76,65	2,775	320,0588	180,23	382,13	306,04	420,285431
1166	343,71	77,54	2,774	319,6658	179,60	380,95	302,14	419,402405
1167	334,42	76,12	2,775	319,4843	179,07	380,16	296,54	419,623444
1168	327,63	77,23	2,677	318,9516	178,01	379,57	291,62	418,596252
1169	321,40	76,77	2,677	318,0923	176,94	378,86	285,56	417,734009
1170	315,91	77,64	2,580	318,0683	175,88	377,60	280,08	416,530731
1171	311,22	75,88	2,579	317,8144	174,87	376,75	275,03	414,6828
1172	307,41	77,40	2,580	317,0799	174,50	377,48	270,62	411,071808

1173	303,65	76,72	2,580	315,9332	173,87	376,27	265,95	407,886047
1174	299,18	77,24	2,482	314,7349	173,54	375,31	261,37	405,028961
1175	295,74	76,96	2,571	313,5164	172,96	374,58	256,98	401,666229
1176	292,46	76,73	2,482	313,3285	172,19	373,51	252,81	399,021179
1177	288,53	76,54	2,481	312,4934	171,59	372,34	248,72	396,685425
1178	285,14	76,94	2,482	311,1313	171,04	371,56	244,89	393,610352
1179	282,28	76,18	2,482	309,9433	170,40	370,57	241,45	391,653595
1180	280,27	77,03	2,384	308,6501	169,70	368,39	238,34	389,35553
1181	277,87	77,03	2,384	308,1370	169,18	366,62	235,33	387,216949
1182	275,31	77,16	2,306	307,4949	168,53	365,98	232,93	384,216248
1183	273,32	76,51	2,268	306,2996	168,28	364,54	230,49	382,517822
1184	271,22	76,88	2,268	305,6988	167,62	363,83	228,39	380,127197
1185	270,07	76,66	2,268	304,8802	167,14	363,13	226,02	378,026947
1186	268,59	76,56	2,268	304,3071	166,60	361,76	224,18	375,861267
1187	266,87	77,41	2,267	302,8462	166,05	360,89	221,88	373,547302
1188	265,67	77,35	2,263	302,1528	165,53	359,38	220,26	371,36087
1189	264,21	77,51	2,170	301,0472	165,24	358,36	218,61	368,902344
1190	263,28	77,01	2,170	301,2424	164,80	357,48	216,95	367,089874
1191	261,66	77,24	2,170	300,0376	164,22	357,08	215,65	364,441833
1192	260,20	77,04	2,170	300,0009	163,82	355,65	214,00	362,352203
1193	258,61	77,10	2,072	298,7557	163,34	355,19	212,36	360,402252
1194	256,76	76,61	2,073	298,0669	163,27	354,47	211,02	358,467743
1195	255,16	77,20	2,072	296,3991	162,61	353,28	209,68	356,907959
1196	253,18	77,00	2,072	296,5113	162,58	351,44	208,01	355,852295
1197	251,73	76,22	2,073	295,7850	162,18	350,37	206,79	354,170929
1198	250,61	77,28	2,072	294,9578	161,69	349,14	205,36	352,502899
1199	249,26	77,23	2,073	294,6443	161,13	348,56	204,13	350,53833
1200	248,45	76,48	2,073	293,7974	160,72	348,15	202,89	348,946869
1201	247,62	76,24	1,976	293,4918	160,11	346,81	202,04	347,488281
1202	246,85	76,05	1,976	292,8291	159,93	345,61	200,73	346,367065
1203	245,96	76,32	1,975	291,9005	159,85	344,73	199,96	345,087341
1204	245,15	76,50	1,975	291,0996	159,68	344,44	199,34	343,139191
1205	244,81	75,90	1,922	290,7274	159,59	343,86	198,47	342,079437
1206	243,65	75,96	1,878	290,2495	159,62	343,23	197,54	340,559875
1207	242,96	77,61	1,877	289,1876	159,51	342,29	196,66	339,057617
1208	242,08	76,17	1,877	288,5861	159,48	341,37	195,80	337,96402
1209	241,20	76,54	1,877	287,7131	159,81	340,39	195,12	336,818115
1210	240,29	76,16	1,877	287,5502	160,21	339,77	194,69	335,399078
1211	239,94	76,29	1,780	286,6961	161,15	339,19	193,98	334,326965
1212	239,21	76,51	1,780	286,1768	161,93	338,50	193,40	332,704651
1213	239,01	76,38	1,781	285,3831	162,09	338,81	192,58	331,533508
1214	238,63	76,07	1,683	283,8719	162,55	337,69	192,03	330,07132
1215	237,95	76,41	1,683	283,0903	163,02	336,86	191,47	329,125671
1216	238,22	76,73	1,741	282,2185	163,56	337,11	191,10	327,34668
1217	238,03	76,07	1,779	282,0509	163,80	336,51	190,89	326,292542
1218	237,18	76,12	1,682	281,2852	164,01	335,99	190,22	324,926483
1219	236,50	75,57	1,683	280,7403	164,35	336,17	189,34	323,282135
1220	235,56	76,13	1,682	279,5939	164,51	335,70	188,92	322,27594
1221	234,68	76,19	1,585	279,3304	164,66	334,82	187,94	321,552704
1222	233,91	76,63	1,591	278,6975	164,88	334,51	187,29	320,626343
1223	233,12	75,57	1,584	277,8220	165,53	334,61	186,71	319,22937
1224	232,39	76,25	1,585	277,5732	165,91	334,88	186,27	317,933838
1225	231,94	76,27	1,585	277,1418	166,33	333,93	185,37	317,448822
1226	231,53	76,02	1,480	276,2995	166,86	335,52	184,90	315,235809
1227	231,51	75,91	1,584	275,3346	166,96	334,72	184,35	314,86908
1228	231,04	75,86	1,468	275,3698	167,21	334,13	184,04	313,957153
1229	230,20	76,11	1,468	274,3802	167,41	333,77	183,46	313,328033
1230	229,45	75,96	1,468	273,1047	167,88	334,46	183,08	311,826294
1231	229,08	75,47	1,468	273,3050	168,25	334,81	182,44	310,69101
1232	229,11	75,11	1,468	272,3061	168,73	334,15	182,20	310,356781
1233	229,10	75,31	1,371	272,0165	168,98	333,98	181,94	309,767914
1234	228,64	75,65	1,371	271,6545	169,35	333,73	181,61	308,438477
1235	227,59	75,82	1,371	270,8946	169,78	333,56	181,14	308,201019
1236	227,56	76,15	1,371	270,8426	170,11	333,42	180,66	307,329437
1237	226,44	75,64	1,371	270,6883	170,52	333,66	180,15	306,540222

1238	226,51	75,80	1,370	270,4454	170,84	333,48	180,01	306,072968
1239	225,65	75,61	1,371	269,0664	171,23	333,09	179,57	305,359192
1240	224,78	75,58	1,273	268,7429	171,70	333,06	179,16	304,283997
1241	224,11	75,46	1,273	268,4369	172,06	332,97	178,59	303,550812
1242	223,44	75,85	1,273	268,6493	172,35	333,11	178,07	302,653534
1243	222,71	74,96	1,274	267,5860	172,80	334,50	177,64	301,423279
1244	222,08	76,81	1,273	267,5475	172,99	334,02	177,12	301,190887
1245	221,52	75,76	1,273	267,1109	173,42	334,84	176,71	299,697693
1246	220,43	76,27	1,176	266,6400	173,69	334,91	176,08	299,334351
1247	219,94	75,32	1,176	265,8283	173,72	334,49	175,65	298,888611
1248	219,25	76,22	1,176	265,0813	174,06	334,86	175,34	297,826996
1249	219,00	75,48	1,175	265,0262	174,47	334,87	174,77	296,874573
1250	218,62	75,32	1,176	264,4843	174,80	335,28	174,49	296,056335
1251	217,83	76,71	1,176	264,3079	175,19	335,00	174,21	296,037476
1252	216,82	75,49	1,176	263,9653	175,09	334,91	173,59	295,336914
1253	215,38	75,94	1,176	263,5435	175,27	335,00	172,67	294,297424
1254	214,69	76,15	1,079	263,6195	175,27	335,14	171,92	293,804718
1255	213,27	75,35	1,176	262,2354	175,24	335,20	171,50	292,88327
1256	212,53	75,48	1,079	262,1608	175,18	334,82	171,08	292,772491
1257	211,88	75,36	1,079	262,0439	174,78	334,01	170,29	292,089142
1258	211,17	74,83	1,079	261,2230	174,63	333,89	169,89	291,200317
1259	210,28	74,93	1,078	260,6657	174,35	334,18	169,52	290,27063
1260	209,70	75,88	1,078	261,5347	174,24	335,57	168,91	289,185333
1261	209,09	75,30	1,079	259,6941	174,09	335,49	168,78	288,042358
1262	208,40	76,08	1,079	259,8081	174,22	336,18	168,47	286,411957
1263	207,65	76,16	1,079	261,0147	173,85	336,19	167,69	286,556702
1264	207,57	76,61	1,079	259,5092	173,49	337,33	167,40	285,645935
1265	207,02	76,73	0,982	259,1457	173,25	336,53	166,76	284,278687
1266	206,57	76,16	0,981	258,1882	172,67	336,55	166,34	283,455688
1267	206,17	75,44	0,982	257,9808	172,35	335,48	166,01	282,173401
1268	205,71	76,10	0,982	257,4940	171,82	334,92	165,68	281,353271
1269	205,66	76,05	0,982	257,0992	171,49	334,32	165,45	280,599304
1270	205,48	75,13	0,884	256,1017	171,46	335,63	165,17	279,079895
1271	204,52	76,42	0,884	256,2404	170,91	334,81	164,68	278,331207
1272	204,12	76,05	0,884	255,8006	170,47	334,27	164,16	277,638885
1273	203,74	75,40	0,884	255,1735	170,11	334,26	163,76	276,621796
1274	203,06	76,36	0,884	255,0076	169,61	333,13	163,34	276,096863
1275	202,53	75,85	0,884	253,9870	169,44	332,42	162,78	275,315704
1276	202,20	76,05	0,787	253,7118	169,05	331,57	162,61	274,503448
1277	201,96	75,89	0,884	253,1295	168,76	331,68	162,20	273,760223
1278	201,35	75,62	0,884	252,5422	168,85	331,95	161,69	272,392151
1279	200,57	75,68	0,787	252,3370	168,58	332,01	161,03	271,405487
1280	199,88	75,85	0,798	251,8753	168,47	331,13	160,53	270,997742
1281	198,74	76,22	0,830	250,9457	168,38	330,71	160,10	269,997986
1282	198,05	75,86	0,787	251,3854	168,58	331,74	159,33	268,715027
1283	197,10	75,66	0,787	250,1177	168,38	331,47	159,10	268,063354
1284	196,65	75,60	0,787	249,8132	168,32	331,26	158,34	266,958771
1285	195,77	75,33	0,787	249,4258	167,98	330,56	157,82	266,585388
1286	194,87	75,41	0,787	249,0781	167,71	330,19	157,44	265,94458
1287	194,15	75,31	0,787	248,6075	167,41	330,41	157,04	264,805847
1288	193,79	74,84	0,786	248,5624	167,24	329,71	156,44	263,729797
1289	193,30	75,25	0,670	248,0570	167,17	329,57	156,00	263,030914
1290	192,68	75,19	0,670	247,8371	167,10	328,83	155,60	262,472931
1291	192,32	75,22	0,786	247,1554	166,77	328,21	155,27	262,037781
1292	192,01	75,29	0,670	246,6024	166,63	327,45	154,86	261,680786
1293	191,40	75,10	0,670	246,2002	166,57	327,59	154,59	260,651031
1294	191,02	74,54	0,670	245,9090	166,43	327,52	154,41	259,651062
1295	190,71	75,63	0,670	245,2297	166,23	326,52	154,01	258,944275
1296	190,28	75,03	0,670	245,2079	166,36	326,73	153,61	258,021301
1297	189,83	75,02	0,670	244,6543	166,18	326,98	153,35	257,128845
1298	189,35	74,69	0,670	244,3478	165,98	327,12	152,99	256,29184
1299	188,86	75,45	0,582	243,6356	165,87	327,21	152,80	255,664459
1300	188,83	74,43	0,573	243,6241	165,86	326,30	152,43	254,869308
1301	188,22	75,30	0,573	243,3721	165,77	325,91	152,00	254,32814
1302	187,15	74,54	0,573	243,0838	165,82	326,08	151,48	253,157166

1303	186,16	74,91	0,573	242,4167	165,75	326,12	151,09	252,277359
1304	185,34	75,24	0,572	241,8186	165,68	325,37	150,94	251,894623
1305	184,83	74,85	0,572	241,8578	165,69	324,53	150,37	251,282135
1306	184,35	75,53	0,572	241,5539	165,75	323,98	150,00	250,924774
1307	184,03	74,73	0,573	241,2061	165,69	323,03	149,52	249,932175
1308	184,28	74,92	0,573	240,8990	165,78	323,16	149,01	249,13472
1309	184,13	74,54	0,475	240,7936	165,84	322,14	148,71	248,571686
1310	184,25	75,11	0,475	240,5174	166,02	322,00	148,53	247,900757
1311	184,17	75,09	0,475	240,1955	166,02	321,78	148,48	247,249298
1312	183,99	75,62	0,475	239,5334	166,43	321,63	148,37	246,615387
1313	183,63	75,00	0,475	239,5405	166,96	321,90	148,15	245,741867
1314	183,46	74,60	0,475	238,9427	167,34	322,05	147,87	245,005493
1315	183,25	74,74	0,387	239,0015	167,88	321,09	147,54	245,056824
1316	182,81	75,49	0,378	238,8925	168,40	320,55	147,33	244,48735
1317	182,67	74,69	0,378	238,1761	169,10	320,12	147,18	243,822998
1318	182,57	75,27	0,378	237,5891	169,99	320,48	147,18	242,802704
1319	182,46	74,65	0,377	237,4336	170,79	320,23	147,05	241,977707
1320	182,50	74,62	0,378	236,7571	172,14	320,74	146,94	240,98053
1321	182,41	75,22	0,378	236,3471	173,00	320,65	146,83	240,474625
1322	182,18	74,67	0,378	236,6309	174,04	319,85	146,39	240,167053
1323	181,98	75,23	0,280	236,2748	174,71	319,17	146,42	239,636002
1324	181,72	74,32	0,280	236,3509	175,79	318,74	146,04	239,343735
1325	181,51	74,27	0,280	235,9120	176,69	318,36	145,92	238,712097
1326	181,44	75,35	0,280	236,0259	177,45	317,60	145,75	238,615158
1327	181,04	75,60	0,280	235,5304	178,49	317,40	145,68	237,735291
1328	181,01	74,97	0,280	235,4224	180,26	318,32	145,79	237,09021
1329	180,94	74,75	0,280	236,0759	180,84	317,39	145,46	237,186691
1330	180,86	74,72	0,280	235,7251	181,38	316,40	145,50	237,064072
1331	181,02	74,45	0,280	235,4140	182,06	316,14	145,47	236,711594
1332	180,86	74,03	0,281	235,7551	182,69	314,58	145,36	236,741486
1333	180,99	74,84	0,281	235,5355	183,37	314,78	145,47	236,693893
1334	180,91	74,53	0,183	235,4704	184,03	314,94	145,25	235,993179
1335	180,53	75,06	0,183	235,0863	185,17	315,23	145,48	235,58049
1336	180,36	74,01	0,183	235,5745	186,11	315,21	145,36	234,817093
1337	179,99	73,76	0,183	235,6140	186,44	314,35	145,10	235,031464
1338	179,71	73,95	0,183	235,3954	187,27	314,23	145,15	234,451508
1339	179,61	74,32	0,183	235,8638	187,43	313,60	144,91	234,705261
1340	179,24	74,29	0,183	235,4956	187,96	313,19	144,80	234,609894
1341	179,21	74,88	0,118	235,3355	188,50	312,72	144,83	234,484848
1342	179,18	74,82	0,086	235,5933	189,23	312,53	144,80	234,385513
1343	178,82	75,07	0,086	236,0811	189,85	311,23	144,55	234,527664
1344	178,81	76,03	0,086	236,4934	190,72	311,72	144,48	234,655624
1345	178,47	75,94	0,086	236,4959	191,88	312,24	144,57	233,95311
1346	178,51	75,12	0,086	236,1041	192,77	312,11	144,52	233,833511
1347	178,27	75,00	0,086	236,2890	193,20	311,90	144,17	233,693619
1348	178,29	75,15	0,086	236,4007	193,78	310,69	144,16	233,309921
1349	178,48	75,01	-0,011	236,3311	194,41	310,84	144,13	233,151993
1350	338,09	70,23	6,764	69,8811	69,94	70,06	70,23	70,734108
1351	660,81	70,53	6,474	70,0928	70,81	70,06	70,88	77,1768494
1352	729,51	70,98	6,162	71,1650	73,54	70,24	71,45	89,3751984
1353	761,42	71,30	5,869	73,5586	78,06	70,75	72,13	99,85112
1354	864,27	71,76	5,481	77,5092	84,51	71,66	72,73	107,218918
1355	979,38	72,13	4,976	83,0096	91,80	73,15	73,54	115,137596
1356	1031,84	72,53	4,470	89,9587	100,29	75,26	74,12	125,481201
1357	935,59	72,73	4,179	98,2105	109,57	78,18	74,64	137,869415
1358	932,67	73,67	3,888	107,5295	119,92	81,94	75,03	152,182846
1359	880,13	73,68	3,481	117,7573	131,40	86,44	75,52	168,673386
1360	808,29	73,94	3,286	128,9191	143,10	91,46	75,73	184,515945
1361	749,63	73,23	3,124	140,6065	154,25	96,90	75,79	198,601181
1362	744,85	73,87	2,877	152,7420	164,68	93,49	75,83	212,071091
1363	750,38	73,56	2,781	164,6576	174,73	97,71	76,26	226,692001
1364	611,65	73,97	17,546	178,3067	182,95	112,75	76,43	242,639557
1365	750,04	73,91	17,346	189,4950	191,41	119,45	76,42	252,279297
1366	887,47	73,87	16,942	199,8592	198,75	123,69	76,88	261,863434
1367	984,80	74,52	16,571	209,7461	204,95	125,37	77,33	270,236115

1368	1062,17	75,07	16,243	218,7038	209,97	132,82	78,00	277,64975
1369	1118,87	75,42	15,762	227,5082	214,18	135,47	78,46	284,342743
1370	1125,65	75,59	15,341	236,5287	218,29	146,01	78,90	291,052368
1371	1133,82	75,65	14,872	244,9431	221,88	155,17	79,22	297,956451
1372	1149,10	75,13	14,459	252,4278	225,44	157,09	79,75	304,271057
1373	1150,98	76,46	14,072	255,5293	206,21	166,76	79,95	309,880493
1374	1136,33	76,27	13,564	260,5340	194,67	171,11	79,99	314,758423
1375	1120,29	76,78	13,157	266,5673	186,88	175,04	80,62	319,164673
1376	1105,76	76,54	12,666	272,4330	181,01	179,13	80,63	323,62326
1377	1089,78	76,00	12,164	278,7105	177,07	189,25	80,57	328,90155
1378	1073,50	76,68	11,772	284,9595	174,08	197,27	80,66	334,397491
1379	1050,03	76,46	11,362	291,3535	172,14	226,99	80,62	339,428497
1380	1031,02	76,51	10,914	298,1702	170,99	216,49	81,05	344,502106
1381	1019,55	76,43	10,473	304,2357	170,44	217,69	80,99	349,654572
1382	1010,02	76,89	10,062	310,6268	170,29	238,01	81,60	355,187897
1383	989,77	76,27	9,671	316,8067	170,45	261,28	81,41	359,956238
1384	972,85	76,02	9,378	322,6828	171,46	254,21	81,95	365,461731
1385	963,24	75,96	8,875	329,2533	173,14	250,70	81,68	371,665161
1386	955,76	76,00	8,584	336,2615	174,76	281,76	81,93	377,464813
1387	946,45	76,35	8,174	342,8544	176,65	300,41	82,29	383,232941
1388	928,21	76,27	7,782	349,2480	179,45	217,59	843,03	389,755157
1389	909,77	76,69	7,471	356,2964	182,26	284,31	840,31	396,075348
1390	900,26	76,75	7,179	363,7262	186,07	292,22	836,25	402,432465
1391	889,14	76,48	6,870	371,2810	189,52	335,91	832,88	408,637299
1392	863,41	76,50	6,576	378,5283	193,54	335,71	826,01	414,426453
1393	828,06	76,52	6,286	386,2461	197,50	257,46	804,80	420,092896
1394	804,16	76,26	6,072	393,2723	202,20	295,76	779,47	424,44101
1395	786,10	76,46	5,780	400,2350	205,67	326,36	756,52	429,05127
1396	770,18	76,24	5,681	406,7315	209,72	315,03	733,12	433,519165
1397	755,39	76,63	5,486	413,5089	214,03	340,22	711,81	437,256409
1398	746,04	76,83	5,269	419,4629	217,66	343,02	692,44	440,370544
1399	734,93	76,12	5,077	424,8832	221,38	357,96	676,38	443,479065
1400	725,54	76,79	4,883	430,0937	224,11	399,72	660,80	446,48233
1401	711,84	76,33	4,786	434,6598	227,67	371,97	645,77	449,269562
1402	690,24	76,48	4,571	438,8781	230,27	438,12	623,00	451,236359
1403	662,85	75,60	4,474	443,6301	231,75	391,10	598,99	453,510162
1404	632,24	75,89	4,376	446,9086	232,76	458,00	565,81	455,557343
1405	603,72	76,02	4,278	449,7408	234,28	467,11	532,44	456,750427
1406	582,68	75,53	4,183	451,9220	235,02	474,33	505,38	457,027344
1407	563,89	75,91	4,085	454,4618	236,92	481,14	480,86	456,939026
1408	544,05	75,19	3,986	456,3564	237,81	487,13	457,77	455,965027
1409	520,73	75,06	3,985	457,2463	238,20	493,46	436,08	454,592346
1410	509,75	75,22	3,889	457,1632	239,01	498,29	419,08	452,966797
1411	509,83	74,52	3,772	457,3358	239,49	502,03	403,58	451,539429
1412	502,55	74,58	3,772	456,1582	239,22	505,92	391,17	448,971008
1413	493,79	74,56	3,675	455,5739	239,39	509,67	378,56	446,390961
1414	485,61	74,59	3,675	454,1319	239,02	512,71	366,81	443,3255
1415	478,77	74,22	3,576	452,7619	238,55	515,53	356,63	439,248291
1416	474,40	74,61	3,479	451,4531	239,32	517,60	347,28	436,311829
1417	470,14	74,41	3,479	449,6882	238,99	519,36	340,12	432,249969
1418	466,07	74,11	3,381	449,0344	237,68	520,91	333,68	428,970398
1419	465,43	74,36	3,380	447,6199	237,43	522,71	329,94	425,489502
1420	463,79	73,90	3,283	447,2429	236,65	524,11	325,62	421,827362
1421	463,98	73,74	3,187	446,7188	235,38	525,87	322,92	418,931763
1422	465,04	74,29	3,069	445,9285	235,61	527,78	321,98	415,82193
1423	474,08	74,15	3,069	445,7061	234,99	528,92	321,84	413,447357
1424	486,62	74,31	2,971	443,7330	233,96	531,17	323,25	410,282471
1425	500,80	74,14	2,972	443,3391	233,77	532,13	328,04	408,407806
1426	502,62	73,85	2,874	442,7365	232,91	533,34	333,90	407,356049
1427	505,50	74,09	2,679	440,9333	232,15	535,10	338,15	406,453033
1428	513,15	74,16	2,694	439,3515	232,74	536,79	342,76	405,102417
1429	519,06	73,97	2,582	438,1588	232,92	537,89	350,47	405,488434
1430	522,72	73,85	2,582	437,3463	233,01	539,45	355,76	405,758636
1431	524,56	74,06	2,485	436,5413	232,61	540,94	358,81	406,238586
1432	522,96	74,01	2,387	435,3369	232,75	542,75	361,24	406,461548
1433	515,08	73,81	2,270	434,1822	232,79	544,80	361,31	407,457123
1434	508,53	73,65	2,214	433,2161	232,88	545,95	359,55	407,760101
1435	501,12	74,05	2,174	432,7010	233,52	548,41	355,59	407,935242
1436	495,39	73,95	2,076	431,9503	233,32	549,14	350,82	408,39679
1437	490,46	74,01	1,979	431,3134	233,78	550,13	347,44	408,421631
1438	487,60	73,86	-0,006	438,7569	252,46	549,13	366,04	410,903015
1439	423,46	74,75	18,343	451,0333	287,67	553,91	370,06	414,276184
1440	578,15	74,70	18,053	455,5198	309,21	555,05	407,56	411,633331
1441	697,53	75,40	17,833	458,7792	324,23	555,91	478,35	409,755096
1442	770,18	75,39	17,546	460,3349	335,83	556,93	560,15	408,617706
1443	833,74	76,18	17,251	459,5777	343,73	556,64	642,18	408,374695

1444	890,30	76,34	16,845	460,6195	350,38	556,42	719,02	408,715118
1445	935,04	75,54	16,454	460,7229	355,86	556,41	787,17	409,738312
1446	978,30	76,58	16,147	460,6969	359,94	555,84	839,75	411,32135
1447	1013,62	75,67	15,759	460,9932	364,06	555,09	884,07	413,571533
1448	1055,82	76,87	15,378	462,8890	367,04	554,76	920,71	415,822723
1449	856,46	76,75	15,057	462,2685	369,85	554,39	931,65	417,222443
1450	741,03	77,07	14,865	464,6110	372,78	554,26	922,46	419,022583
1451	696,98	77,86	14,651	466,8047	374,43	554,33	904,44	421,375366
1452	678,07	77,28	14,452	468,7302	375,77	554,18	892,85	423,254181
1453	675,40	76,95	14,534	470,0369	376,71	553,56	889,35	425,04422
1454	604,15	76,85	13,951	472,4659	377,91	554,11	883,21	427,389618
1455	564,03	77,31	13,852	471,6400	371,20	554,04	855,87	430,676117
1456	537,44	77,32	13,751	460,3456	320,76	553,31	767,06	431,868561
1457	525,40	77,08	13,557	455,3526	297,14	553,49	730,69	431,312927
1458	503,86	77,22	13,362	451,0153	281,20	553,15	693,07	430,621582
1459	483,33	76,92	13,265	446,9755	268,31	552,45	655,88	427,999359
1460	464,65	76,13	13,148	444,0980	257,43	550,07	621,26	426,799622
1461	449,09	76,55	12,999	439,8825	248,25	549,03	588,50	422,85083
1462	437,19	76,64	12,856	436,1464	240,59	546,08	561,46	420,306366
1463	426,14	76,50	12,757	432,1837	233,91	543,75	537,82	417,033081
1464	416,73	76,33	12,662	428,2744	228,44	540,94	516,67	414,008362
1465	411,23	77,63	12,566	423,5637	223,49	537,95	499,68	410,853088
1466	404,43	77,11	12,465	419,4224	220,10	535,34	483,43	407,444946
1467	400,81	76,68	12,349	414,8181	216,96	532,27	470,22	404,829163
1468	396,90	76,91	12,251	410,2494	213,33	529,29	460,48	401,746979
1469	395,47	76,98	12,156	406,6483	210,61	525,74	453,12	399,675385
1470	392,68	76,49	11,960	402,6305	207,93	521,38	445,70	397,579987
1471	388,97	76,58	11,861	398,7452	204,76	517,93	439,24	394,851654
1472	386,59	76,41	11,860	395,1041	202,58	513,54	434,83	393,561554
1473	387,07	76,63	11,668	391,3769	200,47	509,99	432,15	391,587921
1474	386,71	76,59	11,549	388,0439	198,69	506,89	430,57	389,209839
1475	388,55	75,89	11,454	384,7714	196,18	502,17	430,32	389,326172
1476	390,11	76,41	11,358	381,1499	195,30	499,09	433,00	386,957153
1477	393,11	76,45	11,258	377,6567	193,09	495,40	434,81	385,546753
1478	397,51	76,33	11,160	375,0541	191,68	492,00	439,54	385,230713
1479	403,18	76,07	10,966	372,5091	190,10	487,68	445,88	384,990021
1480	408,66	76,40	10,851	369,9807	188,17	483,55	454,80	385,166077
1481	418,35	75,89	10,751	366,9380	186,94	480,12	468,76	385,367981
1482	423,38	76,58	10,558	364,3748	185,62	476,90	479,32	385,304199
1483	423,10	76,39	10,462	362,3642	184,39	473,72	485,77	385,948517
1484	421,54	76,37	10,361	360,7563	183,48	469,69	490,60	387,076569
1485	419,50	76,48	10,166	358,1183	182,48	466,56	492,79	387,713593
1486	417,40	76,58	10,053	355,8830	182,27	464,06	493,38	387,786316
1487	415,09	76,01	10,053	354,5869	181,75	460,03	491,65	388,874298
1488	413,06	77,41	9,859	352,8705	181,41	457,17	490,38	389,283722
1489	412,95	77,30	9,761	351,6498	180,45	453,72	489,57	389,858307
1490	412,79	76,97	9,565	350,3060	180,24	450,24	489,56	390,692322
1491	415,93	76,56	9,468	349,4225	179,66	447,04	491,06	391,485352
1492	419,75	76,85	9,371	348,3337	179,58	444,00	492,58	391,831696
1493	423,92	77,03	9,252	347,4036	178,97	440,04	496,62	391,981873
1494	425,59	76,27	9,058	346,4531	178,38	436,68	501,42	392,298553
1495	426,52	76,99	8,962	346,4109	177,86	433,76	506,05	391,050842
1496	429,94	77,62	8,863	346,6862	177,06	430,23	512,05	391,449249
1497	431,29	77,49	8,768	346,4017	176,78	427,22	517,58	391,605377
1498	429,51	77,78	8,573	345,8643	176,63	424,08	519,72	392,699005
1499	435,07	77,11	8,457	346,6642	176,64	421,41	526,17	393,524872
1500	439,67	77,48	8,358	346,4573	176,09	418,93	534,88	393,902954
1501	440,46	76,55	8,162	346,9641	175,58	415,40	549,09	396,059387
1502	435,75	76,27	8,065	346,2324	174,98	411,85	553,41	397,868286
1503	426,92	76,33	7,969	346,2743	174,92	409,36	546,63	399,213226
1504	414,98	76,36	7,872	345,8742	174,88	406,48	533,98	401,216217
1505	400,20	76,01	7,774	346,0761	174,55	403,95	516,50	403,079376
1506	385,18	75,93	7,660	345,5888	174,69	401,71	495,18	404,484711
1507	371,38	75,84	7,660	344,8620	174,88	399,41	474,19	406,276001
1508	359,74	76,25	7,561	345,0517	174,34	397,62	454,12	406,885803
1509	349,47	76,01	7,464	345,0737	173,66	394,14	437,37	407,563904
1510	337,05	75,57	7,464	344,1492	173,51	392,65	419,12	408,303406
1511	326,70	75,61	7,367	343,6822	172,94	390,82	404,09	407,720154
1512	316,03	75,17	7,367	343,2422	172,23	388,90	388,11	406,777527
1513	304,52	75,38	7,270	342,0811	171,92	386,44	372,50	405,009796
1514	293,78	75,73	7,270	341,3944	171,66	384,56	357,80	403,048187
1515	284,52	76,01	7,270	340,0482	171,45	382,48	343,56	400,133667
1516	273,47	75,54	7,172	338,6492	170,92	380,50	330,23	396,81958
1517	265,44	75,17	7,171	337,1179	169,95	378,83	317,50	393,105896
1518	255,50	75,74	7,074	335,3444	168,63	375,95	304,91	389,337585
1519	248,96	75,91	7,074	333,3419	167,06	373,27	294,28	384,773956

1520	243,36	75,76	7,074	332,5079	165,45	371,88	284,61	380,479736
1521	238,93	75,77	7,073	330,4765	163,73	369,52	275,31	376,277008
1522	235,04	75,58	6,956	328,3829	162,04	367,27	268,02	372,548401
1523	231,65	75,18	6,859	326,1956	160,32	365,22	260,86	368,893768
1524	229,02	75,48	6,859	323,8122	159,00	364,27	255,06	364,409576
1525	225,84	75,54	6,859	322,0728	157,61	363,02	250,11	360,668701
1526	223,27	75,21	6,763	320,0459	156,44	361,80	244,62	356,68158
1527	220,77	75,42	6,763	318,0082	155,42	360,63	240,45	353,429077
1528	218,98	75,35	6,763	316,2597	154,10	359,73	236,64	350,161102
1529	217,36	75,18	6,664	313,8112	153,16	358,34	233,12	346,974213
1530	216,15	74,89	6,663	311,6483	152,00	356,43	229,95	344,544952
1531	214,46	75,15	6,566	310,0217	150,87	354,28	227,64	342,394104
1532	212,94	74,81	6,566	308,2215	150,06	353,03	224,57	339,776459
1533	211,58	75,23	6,471	306,1802	149,06	350,65	222,47	337,565063
1534	210,47	75,20	6,470	304,7014	148,17	349,27	220,16	335,397644
1535	209,20	75,58	6,469	302,3356	146,89	348,12	218,57	332,651611
1536	208,04	75,59	6,371	300,2133	146,04	347,83	216,59	330,320282
1537	207,79	75,22	6,374	299,1016	145,38	346,32	215,35	328,449554
1538	207,31	75,39	6,371	297,3532	144,49	344,98	214,00	327,194153
1539	206,95	75,45	6,276	296,2263	143,60	344,83	212,82	325,209381
1540	205,27	75,49	6,274	295,1275	143,19	344,56	211,18	323,613464
1541	204,80	74,88	6,159	293,5936	142,49	344,26	209,95	321,958618
1542	204,28	74,98	6,159	292,2877	141,96	343,50	209,26	321,003906
1543	203,08	75,48	6,158	290,8597	141,25	343,19	207,97	319,609558
1544	202,96	75,41	6,062	288,7737	140,73	340,80	207,52	318,656433
1545	202,24	75,25	5,965	287,5737	140,22	340,01	206,84	317,866638
1546	201,51	74,94	5,963	287,2693	139,94	339,16	205,91	316,838806
1547	199,96	75,12	5,867	285,5278	139,30	337,76	204,45	316,18692
1548	198,92	74,98	5,865	284,5155	138,78	337,36	203,53	315,039276
1549	198,56	74,63	5,867	283,3169	138,21	336,27	202,95	314,300873
1550	197,58	74,81	5,769	282,3982	137,91	335,26	202,02	313,227722
1551	197,20	74,74	5,768	281,0270	138,03	334,63	201,15	312,40155
1552	196,74	74,90	5,725	280,3344	137,95	333,58	200,31	311,407166
1553	195,62	74,77	5,671	279,2303	137,77	333,28	199,24	310,763947
1554	195,28	75,02	5,670	278,2391	137,36	332,15	198,50	309,924103
1555	194,42	74,70	5,573	277,4804	137,14	332,03	197,71	309,068787
1556	193,74	74,50	5,476	277,1215	136,95	332,20	196,93	308,22821
1557	193,24	74,93	5,478	275,8661	136,45	331,03	196,19	307,564148
1558	192,85	74,89	5,478	275,0127	136,16	330,29	195,44	306,629913
1559	192,61	74,75	5,360	275,3809	135,98	330,58	194,74	305,833374
1560	191,71	74,80	5,361	273,7523	135,62	330,18	194,10	305,040588
1561	191,05	74,60	5,284	273,6361	135,47	330,19	193,27	304,648407
1562	190,46	74,92	5,264	272,9462	135,14	329,10	192,83	304,333588
1563	190,10	74,32	5,263	272,9471	135,16	328,73	191,90	303,811951
1564	189,83	74,78	5,167	271,3970	135,07	328,76	191,62	303,065735
1565	189,85	74,71	5,165	271,4562	134,72	328,17	191,16	302,881348
1566	189,35	74,66	5,069	270,6193	134,55	327,51	190,83	302,397217
1567	189,93	74,96	5,068	269,6973	134,38	327,25	191,00	302,085236
1568	189,68	75,05	5,068	269,2722	134,22	326,68	190,59	301,635834
1569	188,79	74,84	4,972	268,5985	134,41	326,75	190,06	301,57309
1570	188,21	74,70	4,972	268,0768	134,13	326,15	189,42	301,534607
1571	187,96	74,84	4,874	267,5225	133,99	325,27	189,00	301,178223
1572	187,32	74,40	4,777	267,6410	133,87	324,77	188,50	301,121796
1573	187,07	74,59	4,776	266,9183	133,82	324,57	188,38	300,653351
1574	187,16	74,57	4,778	266,5384	133,67	324,42	188,13	300,469177
1575	186,76	74,65	4,711	266,2957	133,56	324,02	187,86	300,413696
1576	186,36	74,60	4,680	265,5972	133,67	323,93	187,60	300,237305
1577	186,04	74,85	4,680	265,3643	133,59	323,86	187,01	300,288086
1578	185,99	75,10	4,561	264,8494	133,43	323,17	186,95	300,027832
1579	185,85	74,83	4,562	264,4054	133,51	322,91	186,67	299,834412
1580	186,04	75,24	4,466	264,6072	133,46	323,51	186,35	299,63916
1581	185,65	75,10	4,367	264,5753	133,52	323,09	186,21	299,505432
1582	185,85	75,36	4,368	263,8564	133,51	322,37	186,04	299,526642
1583	185,93	75,11	4,367	264,3304	133,52	322,33	185,97	299,784058
1584	185,69	75,02	4,367	263,2945	133,51	321,96	185,56	299,256134
1585	188,88	75,66	4,272	263,0069	133,59	321,57	187,04	299,601074
1586	191,69	75,20	4,271	263,7058	133,75	321,78	188,54	300,568298
1587	194,14	75,53	4,173	263,0336	134,08	321,66	190,18	301,640625
1588	196,25	75,21	4,075	263,2068	134,37	321,65	191,68	303,097168
1589	198,05	75,42	4,075	262,8210	134,71	320,90	193,82	304,468048
1590	199,05	75,28	4,075	263,1309	135,01	320,39	195,30	305,699219
1591	200,68	75,13	3,979	262,7249	135,47	320,32	196,77	307,089294
1592	200,69	74,95	3,978	263,4744	135,85	320,44	197,74	308,316345
1593	198,34	75,15	3,979	264,1029	136,28	320,55	197,50	309,422577
1594	194,01	75,24	3,945	263,0826	136,47	320,29	196,18	309,760223
1595	191,70	75,08	3,881	263,5084	136,58	320,74	194,55	309,563782

1596	190,14	75,28	3,765	263,4552	136,36	320,54	193,22	309,43277
1597	189,29	75,40	3,766	263,0506	136,26	320,20	192,48	308,860779
1598	188,69	74,82	3,765	263,4229	136,28	321,30	191,74	308,202667
1599	188,45	75,39	3,668	263,9336	136,25	321,37	191,15	308,03009
1600	188,27	75,44	3,572	263,3670	136,14	321,17	190,97	307,631165
1601	187,64	75,38	3,572	263,1755	136,11	321,78	190,68	307,131592
1602	187,31	75,44	3,571	264,2968	136,15	321,74	190,10	306,86853
1603	186,81	75,25	3,473	263,7173	136,21	321,28	190,02	306,198425
1604	186,58	75,24	3,473	264,8875	136,19	321,69	189,38	305,937042
1605	186,36	75,40	3,433	265,3067	136,27	322,17	188,95	305,416656
1606	186,02	75,57	3,377	265,4122	136,25	322,28	188,87	304,756561
1607	185,49	76,11	3,298	266,1254	136,32	323,02	188,13	304,220856
1608	185,25	76,17	3,279	266,9868	136,34	324,00	187,91	303,828369
1609	185,07	75,88	3,279	266,8637	136,45	324,39	187,63	303,433655
1610	184,96	75,56	3,280	267,2891	136,55	324,10	187,55	303,185852
1611	184,48	75,61	3,181	267,5129	136,72	323,30	186,92	302,89621
1612	184,56	75,66	3,181	267,2015	136,76	322,95	186,45	302,395508
1613	184,20	75,88	3,065	267,4889	137,15	324,04	186,66	301,882324
1614	184,41	75,77	3,065	268,4324	137,13	324,28	186,10	301,789307
1615	184,01	75,89	3,065	268,4194	137,10	324,25	185,89	301,347443
1616	184,18	75,74	3,065	269,8641	137,34	324,55	185,60	300,951721
1617	184,01	76,16	2,968	268,7758	137,56	326,25	185,70	300,203979
1618	183,23	76,14	2,968	268,8419	137,61	326,28	184,43	299,735931
1619	183,05	76,73	2,968	269,3250	137,80	328,31	184,04	298,52948
1620	182,75	76,64	2,870	269,5861	137,93	328,36	183,95	298,549011
1621	182,39	76,44	2,871	269,0673	137,89	329,45	183,36	298,355499
1622	182,35	76,40	2,871	270,7343	138,10	329,69	182,96	298,005951
1623	182,38	76,13	2,774	270,5115	138,37	330,16	182,81	297,614563
1624	182,01	75,85	2,871	270,2358	138,41	330,50	182,43	297,244904
1625	181,86	76,44	2,773	271,3393	138,72	331,81	182,29	296,154816
1626	181,80	76,29	2,773	270,8275	139,05	331,73	181,94	296,186096
1627	181,92	76,52	2,774	270,7392	139,42	332,62	181,52	295,660675
1628	181,58	76,99	2,773	271,1717	139,71	334,27	181,22	295,16629
1629	181,08	76,41	2,676	271,5115	140,00	334,30	180,95	295,234772
1630	181,27	76,54	2,676	271,7795	140,27	334,39	180,73	294,99762
1631	180,75	76,46	2,677	271,7039	140,81	334,36	180,32	294,403259
1632	180,71	76,17	2,676	272,2539	140,98	335,51	180,17	294,410553
1633	180,36	76,81	2,580	271,4740	140,71	335,22	179,85	294,40332
1634	180,30	76,02	2,587	271,1779	140,45	335,02	179,95	294,135284
1635	180,01	75,89	2,579	271,2643	140,46	334,68	179,53	293,865814
1636	180,13	76,10	2,579	271,5380	140,57	334,91	179,38	293,93335
1637	180,25	76,24	2,579	271,5545	140,81	334,74	179,31	293,872589
1638	180,24	76,32	2,579	271,6607	141,14	335,95	179,30	293,393433
1639	180,27	75,98	2,481	271,3491	141,32	336,04	179,62	293,483246
1640	180,50	76,06	2,481	271,5225	141,27	336,35	179,80	293,521271
1641	180,88	75,78	2,481	271,3704	141,42	335,78	180,09	293,38504
1642	181,32	76,41	2,384	272,0897	141,56	336,10	180,11	293,514282
1643	180,65	76,30	2,385	271,1031	141,73	336,12	180,42	293,570801
1644	180,57	76,68	2,481	272,4161	142,95	338,33	180,61	292,447235
1645	180,58	77,92	2,384	271,9763	143,12	339,04	180,73	292,964722
1646	180,52	77,17	2,385	272,5869	143,25	339,91	180,48	293,289093
1647	180,95	77,20	2,385	271,4472	143,37	339,69	180,98	293,345886
1648	180,75	77,22	2,384	272,5860	143,34	340,86	181,17	292,965881
1649	180,67	76,67	2,385	270,9095	143,36	341,12	181,23	293,069092
1650	180,94	76,93	2,268	270,7955	143,35	340,35	181,32	293,439484
1651	181,22	76,84	2,269	270,6212	143,58	340,48	181,17	293,152374
1652	180,72	77,32	2,268	271,1387	143,62	340,55	181,27	293,228912
1653	180,13	76,79	2,268	270,8432	144,00	340,50	180,83	293,797485
1654	179,70	77,01	2,171	270,5886	144,30	340,48	180,61	293,489319
1655	179,31	76,78	2,265	270,5560	144,27	340,00	180,02	293,644897
1656	179,03	76,90	2,170	270,9154	144,63	341,14	179,67	293,094086
1657	178,27	76,61	2,171	271,1523	145,11	341,60	179,62	293,545258
1658	178,24	75,93	2,171	270,8517	145,39	342,55	179,53	293,461609
1659	177,56	76,08	2,074	270,9555	145,82	341,12	179,20	293,637207
1660	177,35	76,37	2,122	270,9274	146,12	340,41	179,01	293,577271
1661	177,05	76,62	2,073	270,4631	146,18	340,57	178,77	293,443787
1662	176,95	76,26	2,073	270,3547	146,41	340,30	178,46	293,162628
1663	176,89	76,42	1,977	269,9486	146,79	340,15	178,56	293,054077
1664	176,76	76,63	2,073	270,1813	146,88	339,96	178,28	292,975616
1665	176,56	76,89	1,976	270,1901	147,09	338,90	177,98	293,068878
1666	176,33	76,65	1,976	270,7826	147,23	338,77	177,75	292,894867
1667	176,07	76,44	1,976	269,7958	147,45	338,65	177,84	292,519226
1668	175,79	76,28	1,975	269,3522	147,66	337,61	177,55	292,483093
1669	175,77	76,44	1,975	269,4644	147,85	337,28	177,22	292,325256
1670	175,87	76,02	1,976	269,0554	148,06	337,05	177,29	292,278168
1671	175,96	76,20	1,969	269,0041	148,37	337,32	177,32	292,060791

1672	175,69	76,32	1,879	269,6150	148,47	337,36	177,41	291,783691
1673	175,62	76,52	1,878	268,9799	148,67	336,81	177,21	291,728912
1674	175,33	76,87	1,878	268,6500	148,90	336,91	177,09	291,757996
1675	175,08	76,39	1,878	268,5888	148,87	336,05	176,64	291,349976
1676	174,99	76,29	1,878	270,0670	149,04	336,03	176,58	291,512299
1677	175,21	76,56	1,869	269,6483	149,01	336,32	176,45	291,360138
1678	175,15	77,04	1,879	269,6275	148,93	336,41	176,44	291,185699
1679	174,58	76,73	1,781	268,9342	148,98	336,20	176,11	290,773285
1680	174,36	76,35	1,781	268,5844	149,01	335,35	175,87	290,744995
1681	174,26	76,41	1,781	269,0073	149,10	334,62	175,75	290,742737
1682	174,35	76,29	1,781	268,6851	148,95	333,57	175,34	290,671326
1683	173,96	76,35	1,781	269,1716	149,04	333,37	175,25	290,626526
1684	173,24	76,14	1,684	268,7776	149,15	332,87	175,05	290,398895
1685	172,66	76,12	1,781	269,6524	149,09	332,13	174,60	290,595703
1686	172,40	76,31	1,683	269,1921	149,16	331,47	174,41	290,641357
1687	172,14	76,69	1,684	270,3539	149,33	331,66	174,21	290,323425
1688	171,31	77,10	1,684	271,3673	149,50	333,44	173,96	289,460541
1689	171,01	76,79	1,684	270,3694	149,49	333,81	173,45	289,567047
1690	171,00	77,43	1,684	271,1877	149,43	334,29	173,47	289,669434
1691	170,87	77,00	1,587	270,7374	149,45	333,24	172,91	289,837158
1692	170,73	76,84	1,587	270,5630	149,65	332,28	172,76	289,414124
1693	170,71	77,33	1,586	269,6679	149,65	330,43	172,29	288,853912
1694	170,89	76,97	1,587	269,8881	149,79	329,20	172,24	288,089508
1695	170,80	76,65	1,586	269,8594	149,76	328,08	172,06	287,723724
1696	170,13	76,61	1,586	270,0217	149,72	327,18	171,84	287,108795
1697	169,80	77,78	1,586	269,8297	149,87	327,30	172,03	286,640594
1698	169,73	77,17	1,586	270,5658	149,71	328,35	171,36	286,048248
1699	169,75	77,51	1,587	270,3210	149,72	327,22	171,26	285,338074
1700	169,45	77,34	1,470	270,4265	149,69	325,99	170,64	284,947601
1701	169,12	76,94	1,470	270,2066	149,89	324,47	170,60	284,45752
1702	168,74	76,95	1,470	270,0811	149,94	324,08	170,14	283,86969
1703	168,58	77,27	1,403	271,7978	150,06	324,91	170,05	283,309052
1704	168,33	77,37	1,470	269,9195	150,14	324,21	169,87	282,834686
1705	168,24	77,30	1,372	270,4446	150,61	323,50	169,67	282,116333
1706	168,09	77,60	1,470	269,9472	151,02	323,06	169,50	281,761017
1707	168,22	77,38	1,373	271,1924	151,23	323,42	169,38	280,891663
1708	167,93	77,28	1,373	271,4389	151,23	323,58	169,19	280,406311
1709	167,98	77,45	1,373	270,6215	151,35	322,70	169,06	280,464752
1710	167,81	77,11	1,373	271,0508	151,20	321,75	168,72	280,339294
1711	167,76	77,16	1,373	270,4339	151,05	320,88	168,78	279,919983
1712	167,47	77,12	1,373	270,5474	150,78	319,78	168,47	279,444519
1713	167,33	77,18	1,275	270,0751	150,37	318,03	168,32	279,260315
1714	167,01	76,84	1,275	270,0447	150,31	317,37	168,02	278,645599
1715	166,93	76,68	1,280	270,3080	150,34	316,97	167,84	278,842468
1716	166,68	77,40	1,275	269,5988	150,23	316,70	167,73	278,482941
1717	166,35	76,73	1,275	269,5479	150,25	316,28	167,35	278,054138
1718	166,23	76,80	1,275	270,0340	150,38	315,78	166,75	278,090576
1719	165,75	76,86	1,275	269,4723	150,41	315,60	166,66	277,743073
1720	165,47	76,74	1,275	269,2986	150,25	314,50	166,37	277,538116
1721	165,04	76,65	1,177	269,2706	150,13	314,11	165,94	277,02832
1722	164,36	76,67	1,275	268,9338	150,43	313,82	165,65	276,953491
1723	163,96	76,63	1,178	268,8809	150,29	313,61	165,21	276,800629
1724	164,00	76,80	1,178	269,1000	150,38	313,01	164,95	276,173584
1725	163,74	77,06	1,178	270,8006	150,31	313,81	164,41	275,783722
1726	163,47	76,63	1,178	269,6283	150,31	313,27	164,31	275,3396
1727	163,32	77,25	1,178	269,8394	150,43	313,10	164,05	274,755737
1728	163,12	77,14	1,177	269,9676	150,61	313,53	163,72	273,976654
1729	162,87	77,05	1,080	268,9292	150,41	312,02	163,40	274,052002
1730	162,25	76,80	1,080	268,3736	150,42	311,01	162,96	273,248993
1731	162,33	76,54	1,080	268,1632	150,48	310,29	162,87	273,432892
1732	162,21	76,24	1,080	267,5628	150,50	309,25	162,58	272,900085
1733	161,91	76,16	1,080	267,4186	150,52	308,44	162,26	272,537903
1734	161,79	76,25	1,080	267,0449	150,67	307,68	162,09	272,132355
1735	161,39	76,38	1,080	267,2609	150,67	307,39	161,74	271,81131
1736	161,22	77,12	1,080	266,5987	150,70	307,30	161,68	270,697388
1737	161,09	76,74	1,080	267,4756	150,64	306,85	160,91	270,557709
1738	160,84	76,62	0,983	267,1064	150,81	307,02	160,84	269,813202
1739	160,85	76,47	0,982	267,2461	150,66	306,12	160,56	269,508362
1740	160,58	76,55	0,983	266,2391	150,76	305,38	160,35	269,248352
1741	160,27	77,03	0,983	265,8963	150,87	304,96	160,15	268,84375
1742	160,09	76,50	0,983	266,7127	151,08	305,56	159,82	268,179382
1743	159,73	76,50	0,983	265,8147	151,07	304,81	159,69	267,630798
1744	159,55	77,09	0,983	266,2945	151,19	304,26	159,26	267,154846
1745	159,18	76,95	0,973	265,3628	151,29	303,72	159,17	266,589539
1746	158,94	76,90	0,886	265,4218	151,06	303,42	159,10	266,185944
1747	158,50	76,56	0,886	265,0749	150,84	302,98	158,68	265,356812

1748	158,32	76,79	0,886	265,1560	150,71	302,65	158,61	265,134399
1749	158,40	76,77	0,885	265,3842	150,57	302,56	158,23	264,942139
1750	158,19	76,82	0,886	264,6062	150,60	302,11	158,26	264,567719
1751	157,69	76,66	0,885	264,4447	150,67	301,65	157,92	264,339478
1752	157,24	76,53	0,834	264,2617	150,68	300,78	157,85	263,843231
1753	156,97	76,49	0,885	264,4159	150,69	300,87	157,64	263,296143
1754	156,72	76,51	0,885	263,9735	150,70	300,64	157,24	263,072937
1755	155,98	76,65	0,885	263,6527	150,56	300,41	157,10	262,462524
1756	155,37	76,78	0,832	263,7993	150,56	300,04	156,46	262,177216
1757	155,12	76,98	0,884	263,6138	150,69	300,21	156,09	261,309509
1758	154,31	76,61	0,788	262,8849	150,66	300,37	155,51	260,731537
1759	153,90	76,46	0,788	262,4450	150,37	299,43	155,14	260,505096
1760	153,61	76,86	0,788	262,1966	150,56	298,88	154,80	259,635498
1761	153,26	76,69	0,788	261,0790	150,39	298,27	154,24	259,391541
1762	152,71	76,48	0,788	261,2084	150,37	297,63	153,80	259,058136
1763	152,42	76,56	0,788	260,4063	150,36	297,05	153,50	258,15741
1764	152,26	76,65	0,671	260,0842	150,45	296,21	153,06	257,81308
1765	152,03	77,06	0,788	260,3331	150,33	297,17	152,63	256,978851
1766	151,69	76,75	0,671	258,8195	150,13	296,36	152,51	256,551025
1767	151,18	77,09	0,671	258,6576	150,22	296,73	152,13	255,607513
1768	150,41	77,65	0,671	259,4315	149,98	296,83	151,46	255,029907
1769	149,94	77,71	0,763	258,7138	149,83	297,15	151,28	254,51886
1770	149,57	77,96	0,672	256,7192	149,95	295,79	151,19	253,741699
1771	149,13	77,33	0,671	256,6834	149,88	294,89	150,99	253,081436
1772	149,05	77,67	0,672	255,6297	149,77	294,46	150,65	252,347183
1773	148,43	77,61	0,656	254,9227	149,61	293,97	150,24	251,573792
1774	147,88	76,59	0,574	254,3347	149,43	293,65	149,86	251,09552
1775	147,40	76,86	0,574	254,1825	149,46	292,66	149,37	250,580933
1776	147,12	76,23	0,671	253,5616	149,25	292,18	148,97	250,234406
1777	146,75	76,52	0,574	252,3539	149,24	291,17	148,41	249,597931
1778	146,46	76,88	0,672	251,8069	149,15	290,35	148,15	249,016632
1779	146,23	77,23	0,574	251,1166	149,28	290,19	147,80	248,14772
1780	145,92	77,24	0,574	251,4374	149,16	290,52	147,48	247,392426
1781	145,85	77,41	0,574	249,8508	149,09	289,58	147,43	247,014191
1782	145,69	76,96	0,574	248,8975	148,86	289,33	146,99	246,220993
1783	145,89	77,30	0,574	248,5620	148,71	288,04	146,61	245,324448
1784	145,66	77,26	0,574	247,9435	148,50	287,20	146,49	245,02182
1785	145,40	77,69	0,574	248,3864	148,34	287,45	145,94	245,118134
1786	145,02	77,23	0,574	246,7116	148,22	286,10	145,71	244,533249
1787	144,70	76,63	0,574	246,1351	147,99	285,03	145,30	243,856842
1788	144,48	77,14	0,574	246,0504	148,00	284,52	145,07	243,244705
1789	144,30	77,23	0,477	245,2425	147,80	283,72	144,61	242,659607
1790	143,98	77,26	0,477	244,5787	147,65	282,80	144,26	242,218887
1791	143,77	77,27	0,477	243,6463	147,50	282,09	144,08	241,448364
1792	143,16	77,35	0,477	243,4130	147,37	281,44	143,61	240,959747
1793	142,84	77,47	0,477	242,7860	147,22	280,18	143,08	240,392471
1794	142,57	76,94	0,477	242,1876	147,17	279,84	142,61	239,823669
1795	142,28	77,37	0,477	242,2681	147,00	279,10	141,91	239,287628
1796	141,95	77,63	0,477	240,9310	146,82	278,58	141,73	238,804642
1797	141,72	77,16	0,477	240,6439	146,76	277,70	141,40	238,228363
1798	141,49	76,91	0,380	240,2927	146,80	277,07	141,05	237,543823
1799	141,34	77,31	0,477	239,7959	146,90	276,33	141,35	237,217834
1800	141,26	76,69	0,477	239,4937	146,84	276,07	141,32	236,607742
1801	140,92	77,28	0,380	238,9968	146,84	275,53	141,39	235,784454
1802	140,72	77,54	0,380	238,3713	146,94	274,63	141,31	235,342331
1803	140,61	77,31	0,380	237,8279	146,91	273,93	141,08	234,468018
1804	140,54	77,62	0,380	237,7723	146,83	273,34	140,76	234,140915
1805	139,77	78,10	0,380	237,8307	146,84	274,00	140,48	233,513107
1806	139,59	76,97	0,380	236,4634	146,79	272,66	140,22	232,825882
1807	139,22	77,55	0,380	235,8791	146,68	271,76	139,70	232,231171
1808	138,80	77,74	0,380	235,2158	146,55	270,84	139,45	231,481415
1809	138,62	77,83	0,380	234,5252	146,57	270,01	139,10	230,411469
1810	138,06	77,07	0,380	233,7975	146,65	269,28	138,69	229,963959
1811	137,80	77,43	0,380	233,1106	146,65	268,98	138,30	229,35054
1812	137,28	76,82	0,380	232,9498	146,70	268,85	138,06	228,615387
1813	136,72	76,91	0,380	231,9324	146,64	268,03	137,66	228,130463
1814	136,48	77,42	0,282	231,6834	146,68	267,58	137,27	227,335037
1815	136,13	77,38	0,283	230,8190	146,74	266,96	137,16	226,725784
1816	135,86	77,40	0,282	229,9897	146,79	266,45	136,70	226,025452
1817	135,43	76,92	0,283	229,5360	146,82	265,44	136,49	225,247101
1818	135,32	77,09	0,283	228,9689	146,79	264,69	136,26	224,707748
1819	135,01	77,25	0,283	228,0621	146,73	264,07	135,94	223,875992
1820	134,76	77,29	0,282	227,2476	146,73	263,43	135,73	223,24205
1821	134,41	77,67	0,283	226,8619	146,68	263,16	135,42	222,45903
1822	134,08	76,92	0,283	225,8556	146,64	262,43	135,19	221,950119
1823	133,81	77,26	0,283	225,8692	146,62	261,50	134,80	221,423019

1824	133,47	78,02	0,185	224,3761	146,54	261,17	134,49	220,586334
1825	133,20	77,76	0,185	223,6236	146,49	260,42	134,12	219,819656
1826	132,81	77,75	0,185	223,0797	146,58	259,40	133,80	219,332352
1827	132,58	77,94	0,185	223,1074	146,56	259,15	133,51	218,790253
1828	132,17	77,87	0,185	222,1257	146,47	259,05	133,05	218,006836
1829	131,90	78,09	0,282	220,9866	146,41	258,37	132,97	217,255554
1830	131,57	77,56	0,209	220,3591	146,37	257,82	132,48	216,608032
1831	131,16	77,95	0,279	219,6828	146,37	257,84	132,34	215,806091
1832	130,99	77,87	0,185	219,1543	146,23	256,66	131,87	215,26355
1833	130,51	77,20	0,185	218,3748	146,19	256,68	131,65	214,458389
1834	130,37	77,83	0,185	218,6214	146,08	256,58	131,36	214,026016
1835	130,03	77,80	0,185	217,5254	146,04	255,42	130,93	213,245316
1836	129,71	78,05	0,185	217,2182	146,03	254,93	130,86	212,494385
1837	129,41	77,61	0,185	216,4611	146,01	254,57	130,45	211,856522
1838	129,25	77,10	0,185	215,6315	145,99	254,00	130,20	211,102432
1839	128,80	78,19	0,185	214,6596	145,81	253,27	129,84	210,497864
1840	128,47	78,22	0,088	214,3971	145,66	252,67	129,36	209,8741
1841	128,14	78,35	0,088	213,2459	145,75	251,84	129,05	209,002457
1842	127,91	77,76	0,088	213,0527	145,60	250,89	128,82	208,469284
1843	127,54	77,60	0,088	211,9343	145,46	250,11	128,49	207,807602
1844	127,29	77,74	0,088	211,5141	145,48	249,54	128,17	207,068848
1845	126,99	77,47	0,088	210,5811	145,40	249,24	127,98	206,297913
1846	126,76	77,78	0,088	209,8162	145,31	248,44	127,58	205,569046
1847	126,63	78,08	0,088	209,2704	145,21	247,50	127,25	205,122742
1848	126,16	78,23	0,088	208,2624	145,11	247,41	127,11	204,342957
1849	126,05	78,67	0,088	208,1471	145,01	246,45	126,66	203,850418
1850	126,00	78,31	0,088	207,5723	145,02	245,69	126,63	203,325851
1851	125,68	78,47	0,088	206,7081	144,81	245,34	126,43	202,792908
1852	125,28	78,88	0,088	206,1862	144,78	244,90	126,10	202,204529
1853	124,98	78,33	0,088	205,9420	144,70	244,63	125,79	201,632156
1854	225,34	74,27	7,168	74,1714	74,31	74,25	96,45	75,2186584
1855	437,04	74,08	6,953	74,3512	74,84	74,28	172,04	80,1640244
1856	677,99	74,37	6,566	75,1901	76,71	74,33	298,66	91,5920639
1857	743,28	73,90	6,272	77,0467	80,35	74,47	414,22	106,095497
1858	745,86	74,50	5,961	80,1902	85,68	74,64	498,40	118,717377
1859	768,57	74,75	5,573	84,6875	91,62	75,09	546,94	129,166672
1860	805,18	74,94	5,260	89,6564	97,87	75,67	596,86	137,384689
1861	792,51	75,35	4,972	95,0999	104,50	76,65	656,22	147,945251
1862	797,98	75,43	4,680	101,4529	112,53	78,03	696,86	159,879272
1863	792,81	75,61	4,366	108,5614	122,16	79,75	734,49	171,095383
1864	805,57	75,74	4,078	116,8373	131,70	81,81	766,33	180,878296
1865	805,68	76,09	3,767	125,2338	141,08	84,15	787,90	191,528732
1866	802,95	76,08	3,475	134,6726	150,64	86,61	809,90	203,829254
1867	774,26	76,50	3,236	144,6443	160,61	89,28	820,28	215,866745
1868	762,32	76,51	2,970	154,9541	170,56	91,96	825,28	227,679764
1869	723,27	76,46	2,776	165,5436	180,46	94,98	811,59	239,696548
1870	701,84	76,65	2,581	175,8653	189,48	98,11	791,82	250,978821
1871	574,79	76,42	8,667	187,3334	198,12	101,85	756,74	268,073151
1872	592,73	76,90	17,249	197,8477	206,50	108,24	720,31	273,775146
1873	659,42	76,94	17,035	207,9102	213,11	112,35	722,12	278,088745
1874	652,77	76,85	16,743	216,9228	217,35	116,39	711,46	281,591919
1875	659,02	76,99	16,551	222,2892	208,54	121,13	670,54	285,306396
1876	636,65	76,39	16,453	226,2986	192,11	126,99	615,60	288,267517
1877	604,44	76,21	16,242	230,5274	181,38	132,02	571,11	290,578979
1878	584,73	76,50	16,105	234,1190	172,13	147,79	532,60	292,586945
1879	584,60	76,77	15,852	236,7010	164,47	155,51	506,03	293,937622
1880	588,56	76,63	15,750	239,2261	158,39	164,86	486,89	295,115479
1881	592,85	76,40	15,555	241,2698	153,85	168,15	473,82	296,773987
1882	589,78	75,90	15,351	242,3220	149,95	165,09	464,24	298,540802
1883	595,17	76,47	15,247	243,4803	147,32	187,25	458,46	299,838654
1884	610,17	76,42	15,054	244,4922	145,09	177,72	461,04	301,170258
1885	632,96	76,20	14,857	245,3318	143,44	185,94	474,71	302,760437
1886	654,77	76,63	14,641	246,0786	142,02	202,56	492,41	304,395325
1887	665,85	76,41	14,450	247,0808	141,26	184,84	505,21	306,797302
1888	673,78	77,01	14,349	247,8639	140,61	192,70	514,52	308,64267
1889	678,81	76,71	14,058	248,8881	140,16	199,37	522,56	311,18277
1890	695,54	76,80	13,848	249,8088	140,45	199,27	535,37	313,346039
1891	713,20	77,03	13,555	251,4076	140,69	200,88	551,99	316,424377
1892	733,38	77,36	13,360	252,5010	140,91	215,40	577,37	319,320557
1893	746,78	76,98	13,143	253,9611	141,56	218,59	598,57	322,670319
1894	762,35	77,03	12,855	254,9435	141,82	231,04	621,27	326,347473
1895	779,20	77,57	12,659	256,5453	142,49	217,41	640,72	330,421509
1896	789,87	77,24	12,346	257,8593	143,33	242,77	656,12	335,210449
1897	804,52	77,63	12,055	259,7469	144,34	221,36	671,64	340,15155
1898	817,36	78,01	11,863	261,7209	145,65	252,44	686,29	345,048737
1899	837,23	77,34	11,549	263,3630	146,83	257,72	701,04	350,938019

1900	855,16	77,87	11,258	266,1176	148,00	263,72	715,04	356,729889
1901	854,38	78,26	10,967	267,7450	149,47	268,13	724,08	363,055817
1902	843,45	77,34	10,755	270,3867	150,50	274,28	729,26	369,518768
1903	838,73	77,95	10,461	272,8262	151,52	280,20	732,64	376,013519
1904	814,61	77,90	10,175	275,3814	152,65	285,58	727,95	381,765533
1905	793,60	77,81	9,957	278,7886	154,08	291,59	713,09	388,223145
1906	782,66	77,92	9,760	282,7414	155,28	298,18	702,93	392,975159
1907	777,36	77,47	9,558	285,9689	156,85	305,06	694,02	397,791229
1908	771,24	77,83	9,374	289,9201	157,99	311,98	687,40	402,414124
1909	753,38	78,29	9,059	293,0655	159,31	319,19	681,11	406,264069
1910	729,06	77,59	8,870	295,5593	160,68	326,11	667,39	409,805634
1911	691,33	77,67	8,771	298,5311	162,16	333,47	637,93	415,136261
1912	667,14	77,19	8,667	300,7260	163,53	340,22	609,08	419,059601
1913	647,56	77,58	8,456	303,5653	164,70	346,32	582,62	423,082092
1914	633,36	77,33	8,362	305,5694	166,05	352,80	560,79	425,820831
1915	622,87	77,11	8,165	308,0426	167,43	358,69	542,25	427,625854
1916	601,31	77,36	8,068	309,7441	168,89	363,54	520,38	428,369995
1917	578,64	77,15	7,970	311,8037	170,12	368,58	496,68	428,757813
1918	561,88	77,37	7,875	313,8567	170,87	373,03	476,91	428,499664
1919	551,97	77,29	7,776	315,2664	172,10	377,08	459,87	427,325439
1920	539,13	77,16	7,660	317,4935	172,62	380,82	443,94	425,950409
1921	528,75	77,40	7,563	319,0168	173,61	383,37	426,41	424,235291
1922	514,69	77,75	7,466	321,0806	174,03	385,95	409,22	423,860962
1923	501,29	77,87	7,461	322,7256	174,19	368,64	393,31	422,381653
1924	486,42	77,46	7,366	324,6952	174,26	391,18	377,93	420,747467
1925	481,66	77,52	7,268	325,4115	173,96	393,22	364,34	417,987518
1926	481,96	77,20	7,171	326,9918	173,82	395,85	355,86	414,992767
1927	491,10	77,55	7,172	327,0972	173,64	397,75	350,91	411,99469
1928	508,52	77,38	7,076	327,6750	174,13	400,01	350,02	409,908356
1929	529,22	77,30	6,861	328,3528	174,76	402,01	352,95	408,819641
1930	546,84	77,35	6,763	329,5575	175,94	403,51	359,38	408,073486
1931	565,93	77,30	6,667	330,3635	177,25	405,22	370,71	407,504181
1932	577,28	77,33	6,571	331,3249	178,83	406,95	383,35	407,645874
1933	578,37	77,36	6,374	332,2243	180,86	409,04	393,44	408,494537
1934	584,14	77,25	6,278	333,9311	182,24	411,15	402,04	410,067566
1935	590,90	77,68	6,159	334,7661	184,38	413,62	408,84	412,625336
1936	599,60	77,73	5,965	336,8700	186,25	415,60	412,59	415,379822
1937	605,87	77,72	5,867	337,7598	187,79	417,31	417,98	418,089478
1938	618,09	77,78	5,673	338,6069	189,42	419,22	425,09	421,13504
1939	629,84	77,84	5,479	340,0788	191,21	422,29	433,60	424,33548
1940	618,01	78,31	5,364	341,2735	192,76	424,62	446,09	427,043762
1941	604,91	78,22	5,266	342,9778	194,66	426,82	454,44	429,525452
1942	586,16	78,28	5,070	344,8009	196,29	429,34	450,86	431,815735
1943	568,11	77,70	4,975	346,4409	197,95	430,72	444,63	433,349823
1944	554,52	78,04	4,876	347,7439	200,11	433,77	436,34	434,891205
1945	546,60	77,52	4,780	349,9646	202,09	436,40	428,41	436,297699
1946	541,81	77,51	4,681	351,6046	203,30	438,82	421,31	437,889221
1947	537,51	77,73	4,565	352,7366	205,03	441,03	415,02	438,348175
1948	535,15	77,63	4,468	354,5100	206,81	443,83	407,43	440,28894
1949	527,96	77,50	4,401	357,0066	208,73	446,49	399,60	441,566803
1950	528,74	77,38	4,272	358,3121	209,91	448,10	393,39	443,367615
1951	528,67	78,07	4,272	360,9358	211,46	450,19	390,13	445,396423
1952	529,32	77,66	4,177	361,8679	212,74	451,79	388,44	446,604279
1953	530,01	77,50	4,078	363,7448	214,45	453,26	386,17	447,313843
1954	530,05	77,40	3,885	364,9319	216,04	455,14	386,11	448,448853
1955	534,15	77,85	3,884	366,3646	218,19	456,13	387,28	449,460388
1956	535,10	77,83	3,768	368,3215	219,13	457,78	389,04	449,348358
1957	532,39	77,66	3,573	369,9250	220,90	458,80	390,52	449,663513
1958	532,26	77,33	3,475	372,1385	225,27	459,80	395,04	449,772522
1959	538,54	77,98	3,379	384,4855	259,15	462,89	443,12	452,028961
1960	545,84	77,66	3,282	389,5724	281,17	465,06	468,93	454,377686
1961	555,62	77,61	3,183	394,3710	299,42	467,38	492,03	456,484222
1962	553,36	77,51	3,066	398,1559	315,22	469,30	508,06	458,343689
1963	550,61	77,87	3,067	401,4255	329,13	470,77	517,01	459,660522
1964	551,64	77,55	2,970	405,2025	341,48	472,52	526,05	460,532684
1965	539,68	78,36	2,873	407,5576	352,41	474,30	529,82	461,432068
1966	536,46	78,21	2,776	411,1467	362,78	476,30	532,46	463,989288
1967	534,28	77,51	2,678	414,7765	372,03	478,38	535,09	465,654419
1968	530,34	77,43	2,581	418,1470	379,37	480,27	536,30	466,852783
1969	527,69	77,37	2,581	418,5057	386,17	481,47	535,12	467,498138
1970	518,73	77,67	2,484	422,6677	392,92	483,71	532,92	467,912781
1971	513,94	77,29	2,386	425,8716	398,80	485,48	532,18	468,500122
1972	514,93	77,79	2,270	427,9849	403,87	487,51	532,08	468,930115
1973	512,14	78,10	2,269	430,2175	409,66	489,22	531,78	469,652954
1974	505,87	77,98	2,172	430,8853	415,25	489,20	528,86	470,330414
1975	504,57	77,83	2,076	431,9375	419,85	490,55	525,60	470,333679

1976	503,00	77,35	2,075	434,9913	424,81	492,65	522,23	471,294891
1977	495,19	77,23	1,978	435,3377	427,68	493,56	519,78	471,237854
1978	490,39	77,47	1,978	437,6329	431,80	494,92	515,97	471,121216
1979	484,17	77,39	1,978	439,1785	434,71	496,08	512,65	470,880615
1980	486,10	76,98	1,881	439,9536	437,19	497,53	509,58	470,24649
1981	301,20	76,84	19,335	443,8578	445,72	500,34	479,92	484,738586
1982	330,03	77,06	18,486	442,7753	449,19	504,29	460,29	476,22522
1983	287,74	77,22	18,059	444,9967	449,02	506,94	437,09	478,247345
1984	368,45	76,99	18,338	442,4327	447,51	506,92	431,97	463,614075
1985	532,43	76,82	18,051	439,5275	444,48	509,64	466,31	458,107269
1986	649,59	77,20	17,833	435,1424	441,60	509,44	531,66	455,186096
1987	776,58	77,49	17,443	431,5604	437,92	508,27	612,36	454,814575
1988	814,61	77,77	17,156	428,6747	434,52	507,11	683,24	455,675934
1989	826,83	78,18	16,840	424,6628	431,01	505,51	739,40	458,951385
1990	824,30	77,82	16,457	422,0013	428,60	503,59	782,39	462,896118
1991	818,62	78,12	16,143	419,8987	425,77	501,94	812,26	467,507355
1992	816,44	78,19	15,855	417,8419	423,59	500,61	835,43	471,985565
1993	842,06	78,47	15,558	416,2913	422,17	499,36	857,28	476,840546
1994	790,72	78,89	15,250	414,3226	419,69	496,97	868,47	481,573151
1995	693,52	78,77	15,054	415,3131	417,97	496,07	865,91	485,648407
1996	598,78	78,39	14,862	415,9876	416,33	495,19	852,96	488,935272
1997	546,42	78,82	14,745	417,4682	414,72	494,25	830,49	490,662109
1998	512,57	78,71	14,549	418,1846	412,57	493,85	802,81	491,993134
1999	488,81	78,85	14,450	419,6321	410,69	493,43	775,44	492,364471
2000	472,82	78,56	14,356	419,7361	408,19	492,24	753,04	492,276978
2001	461,05	78,48	14,159	419,3366	405,77	491,13	733,55	491,077789
2002	452,35	78,69	14,158	418,0231	403,94	490,13	716,85	488,409546
2003	443,84	78,31	13,944	417,2817	401,72	489,15	700,95	486,098145
2004	437,10	78,56	13,848	414,8998	399,36	487,98	688,79	483,312225
2005	430,72	78,38	13,753	413,8892	397,01	486,63	676,08	480,171204
2006	420,59	78,40	13,656	402,1433	346,13	484,02	599,76	477,935211
2007	407,60	77,90	13,557	395,7311	316,98	480,62	561,66	474,451233
2008	397,62	77,93	13,457	391,2759	296,15	478,30	528,57	469,357117
2009	388,32	77,67	13,359	385,9984	279,70	475,05	502,19	464,805939
2010	380,54	77,08	13,261	381,5835	266,13	472,52	478,35	459,139618
2011	373,50	77,96	13,145	377,5108	255,57	469,72	458,08	455,376495
2012	367,08	77,37	13,049	372,9668	247,13	467,62	439,40	450,977478
2013	362,51	77,44	12,953	368,7369	239,81	465,15	424,95	445,97464
2014	358,21	77,36	12,854	364,0170	233,94	462,61	411,39	441,33313
2015	354,76	77,55	12,754	360,1733	228,89	460,12	400,65	437,107819
2016	348,76	77,23	12,658	355,7204	223,84	457,90	392,10	432,781433
2017	340,97	77,54	12,565	351,9915	219,54	456,09	382,75	428,991882
2018	332,04	78,06	12,467	347,9445	215,92	453,75	371,74	425,535278
2019	323,83	77,79	12,461	344,7696	211,91	452,01	360,90	420,957092
2020	315,20	77,76	12,346	341,3908	208,60	449,20	350,16	418,050842
2021	306,95	77,93	12,253	337,6195	205,62	447,30	339,61	414,713379
2022	299,29	78,21	12,155	333,2430	203,10	445,56	329,80	411,015015
2023	291,91	78,46	12,053	329,8554	200,33	443,59	321,01	406,95282
2024	284,60	77,59	12,054	327,5379	197,41	441,56	311,30	403,620453
2025	279,64	77,78	11,958	323,0218	195,34	439,55	303,39	399,475189
2026	275,80	77,49	11,861	320,8729	192,66	437,09	296,91	395,68338
2027	272,40	77,24	11,859	317,5878	190,57	435,43	290,71	392,024597
2028	269,01	77,44	11,762	314,5847	188,55	434,39	285,17	387,231812
2029	266,72	77,33	11,667	311,2888	186,68	432,28	280,81	384,017456
2030	265,11	77,50	11,663	308,5753	184,54	428,86	276,99	381,107971
2031	264,77	77,87	11,550	306,9566	182,60	427,53	273,41	377,140442
2032	272,74	77,68	11,452	304,5133	180,72	426,30	273,32	373,037476
2033	280,05	77,44	11,453	301,7790	179,16	425,11	275,08	369,484955
2034	287,51	77,44	11,352	298,6727	177,32	423,06	278,13	366,337097
2035	291,85	77,04	11,258	296,4510	175,75	421,51	282,34	363,355682
2036	301,43	77,26	11,160	293,9123	174,27	420,03	285,93	359,252014
2037	311,37	77,01	11,060	291,9456	172,94	418,59	291,28	355,890289
2038	316,08	77,05	10,963	290,8553	171,41	416,26	295,73	352,991852
2039	315,40	77,41	10,848	289,6302	170,34	415,28	299,59	349,692078
2040	315,02	77,33	10,846	288,5308	169,27	413,92	303,55	347,59079
2041	312,72	77,37	10,751	287,9724	168,07	413,01	307,73	343,886688
2042	307,86	77,21	10,655	287,2621	166,91	412,15	307,03	340,0289
2043	302,22	77,14	10,651	286,2989	165,97	410,44	303,25	337,359528
2044	295,08	76,81	10,554	285,9841	164,99	409,34	299,08	335,122192
2045	286,35	76,90	10,458	285,3739	164,37	408,00	293,92	332,246735
2046	276,76	77,11	10,363	285,0805	163,54	407,03	286,87	330,119965
2047	268,76	76,96	10,361	284,8877	162,99	405,28	280,32	328,094604
2048	259,83	77,07	10,265	284,0371	162,10	404,48	272,57	326,928345
2049	246,55	77,29	10,175	284,5123	161,56	403,60	263,88	324,740082
2050	239,40	76,75	10,165	283,5731	160,89	402,16	256,52	322,623199
2051	232,94	77,10	10,048	282,6916	160,05	401,15	250,26	320,154266

2052	228,08	77,08	10,047	281,7584	159,22	399,31	243,60	319,438843
2053	223,94	76,88	9,953	280,2169	158,41	397,38	238,44	317,080719
2054	221,54	76,82	9,953	279,2301	157,86	395,69	233,25	315,077301
2055	218,63	77,03	9,854	277,6242	157,17	394,52	229,12	312,851135
2056	216,66	77,26	9,757	276,7538	156,66	394,28	225,02	310,893341
2057	214,70	77,09	9,658	274,7242	156,28	392,90	221,83	307,948456
2058	212,98	77,02	9,661	273,5163	155,90	391,72	218,53	306,381622
2059	210,80	77,05	9,561	271,4128	155,48	389,08	215,97	304,604828
2060	209,90	76,83	9,464	270,6407	155,19	388,06	213,26	302,817505
2061	208,71	77,07	9,465	268,4014	154,87	386,96	211,55	300,411163
2062	207,55	76,74	9,366	266,6370	154,43	385,71	209,45	299,12558
2063	206,62	76,85	9,251	265,1681	153,96	384,28	207,62	298,188599
2064	205,85	76,83	9,252	264,5176	153,78	384,16	205,80	296,257996
2065	243,31	77,02	9,151	270,0845	168,20	383,73	226,52	293,877869
2066	386,24	76,82	9,054	273,2191	179,75	383,51	265,12	291,739197
2067	515,01	76,78	8,824	274,5425	188,65	383,23	316,15	292,185059
2068	216,91	73,49	7,086	73,0667	72,39	73,53	99,40	73,476387
2069	368,17	73,62	6,856	73,2647	73,05	73,34	189,86	77,6086655
2070	450,58	73,51	6,663	74,0399	74,89	73,33	246,00	84,6720428
2071	580,86	73,79	6,468	75,5924	78,38	73,44	346,76	94,9850693
2072	656,77	73,81	6,131	78,1971	84,41	73,26	434,87	107,987961
2073	709,70	74,22	5,864	81,6503	92,64	73,42	509,63	122,097305
2074	768,06	74,43	5,476	85,8867	101,66	73,73	569,92	133,678207
2075	877,37	74,45	5,069	90,8079	110,58	74,23	645,69	144,542435
2076	808,71	75,00	4,778	96,4648	119,38	74,99	686,58	154,215302
2077	780,11	74,93	4,467	103,3833	127,69	76,71	712,94	162,889236
2078	766,88	75,64	4,175	111,6753	136,16	78,84	729,50	173,720612
2079	767,61	75,33	3,884	120,9479	144,89	82,46	755,29	185,647415
2080	766,90	75,23	3,671	131,0121	154,23	83,98	761,37	198,160294
2081	780,18	75,83	3,379	141,5206	163,97	87,52	785,10	210,414658
2082	780,90	75,60	3,185	152,7005	173,97	89,31	804,98	222,889725
2083	750,82	76,03	2,874	163,8302	184,32	99,71	806,13	235,796295
2084	739,62	75,79	2,582	175,3140	194,46	98,83	800,24	249,036621
2085	608,27	76,48	9,210	187,7345	204,16	83,60	765,10	269,687988
2086	653,15	76,86	17,346	199,4440	212,91	107,40	746,35	277,715515
2087	769,00	76,26	17,040	209,9949	221,21	120,90	777,45	286,989899
2088	836,93	76,65	16,649	220,4117	227,32	130,36	816,47	296,325348
2089	886,37	75,95	16,356	229,2191	232,47	132,57	853,01	304,794373
2090	909,91	76,67	15,951	237,3945	236,98	139,32	882,24	312,896362
2091	915,27	76,98	15,659	239,5399	212,76	138,78	830,57	319,116058
2092	920,69	77,26	15,348	244,0138	200,56	145,84	811,73	325,389526
2093	917,63	76,79	14,961	247,9488	191,18	157,35	798,95	331,155823
2094	940,28	77,30	14,647	251,8605	184,06	154,51	790,47	337,409271
2095	964,78	77,72	14,262	255,5747	177,77	180,05	786,26	343,089539
2096	976,76	77,46	13,944	259,0299	173,63	193,04	785,91	348,217529
2097	972,97	77,40	13,557	262,4556	169,95	199,56	784,69	353,558289
2098	963,70	77,28	13,263	265,2814	167,35	205,82	783,11	358,753754
2099	946,78	77,33	12,859	268,5277	165,89	193,59	779,96	364,92569
2100	903,04	77,61	12,660	271,8330	165,01	218,24	783,06	371,027954
2101	880,48	77,01	12,255	275,5264	164,60	204,69	779,94	377,076904
2102	875,00	77,90	11,959	278,7468	164,90	218,42	774,21	382,723755
2103	873,10	77,48	11,672	281,3798	165,39	209,81	768,43	387,92395
2104	876,91	77,98	11,358	284,8610	166,17	223,23	764,88	393,236084
2105	894,85	79,02	11,065	287,7112	167,57	233,72	765,70	397,941467
2106	904,33	78,76	10,660	290,6617	169,44	258,92	768,58	402,948669
2107	824,09	78,94	10,462	293,6852	171,70	255,29	759,68	407,452545
2108	780,39	77,76	10,172	296,3990	173,56	255,28	736,52	410,496979
2109	755,68	78,26	9,958	299,4332	175,92	239,84	710,03	412,927338
2110	747,90	78,77	9,664	302,3305	178,39	290,49	692,15	414,457489
2111	750,93	77,65	9,468	304,7575	181,02	297,94	682,79	417,006042
2112	759,96	78,48	9,259	307,4875	183,75	305,21	682,55	419,348724
2113	772,32	78,95	8,965	309,8123	186,63	312,26	686,84	421,359619
2114	784,02	78,25	8,771	312,0148	189,51	319,46	693,03	423,81012
2115	794,26	77,90	8,459	314,6263	192,59	326,04	698,96	427,145111
2116	803,57	77,68	8,169	317,0313	196,11	327,09	706,98	430,345947
2117	813,63	78,37	7,876	321,3173	199,59	338,12	712,63	434,463928
2118	814,59	79,48	7,566	323,2818	203,75	344,88	721,16	437,25
2119	812,70	78,56	7,272	326,5312	207,84	351,76	724,19	441,040894
2120	814,39	78,42	6,961	329,6083	212,03	358,57	730,31	444,429657
2121	808,95	78,66	6,766	333,0299	216,77	365,80	731,10	448,6987
2122	799,58	79,75	6,475	336,5341	221,46	350,95	734,41	452,541199
2123	787,48	79,46	6,282	340,9813	225,69	381,07	730,47	456,554199
2124	774,32	79,24	5,971	345,1930	230,80	329,52	727,53	461,588928
2125	763,67	78,78	5,775	350,8729	234,57	394,96	716,25	465,394287
2126	760,73	78,85	5,581	354,7231	239,64	359,90	709,14	469,93219
2127	757,57	78,30	5,365	359,3699	243,39	395,84	701,52	473,944733

2128	742,57	79,39	5,173	363,4115	246,92	347,64	691,60	477,280945
2129	703,43	78,61	4,979	367,3387	251,50	422,25	669,76	481,183594
2130	663,86	79,76	4,880	370,6684	254,54	329,52	637,95	482,924408
2131	632,69	78,61	4,783	374,4151	257,53	360,75	603,49	483,681213
2132	610,21	78,72	4,686	378,1075	259,34	445,83	568,49	483,314941
2133	589,08	78,83	4,570	380,4528	261,30	386,36	539,82	483,31131
2134	575,17	78,05	4,472	384,5565	261,52	456,86	514,85	482,405518
2135	558,92	78,52	4,374	386,4571	261,99	462,78	490,75	481,135132
2136	548,57	78,42	4,277	388,4688	262,08	418,61	469,71	479,231445
2137	538,99	78,75	4,245	390,5997	261,22	472,05	450,33	477,38385
2138	529,89	78,22	4,179	392,6055	260,19	371,90	433,93	476,317963
2139	521,13	78,20	4,002	395,5441	258,93	479,66	421,54	474,228424
2140	518,77	78,44	3,985	396,3569	258,62	483,03	410,75	471,555328
2141	519,38	78,54	3,887	396,8635	257,93	272,84	404,15	468,760162
2142	522,65	78,89	3,770	404,8697	278,91	461,92	429,51	467,303162
2143	531,38	78,51	3,673	412,9841	305,94	492,45	455,67	466,791351
2144	546,25	78,54	3,575	417,4038	324,78	495,67	480,14	466,261261
2145	437,01	78,31	17,817	426,5461	340,19	400,51	483,05	477,730408
2146	386,91	78,37	17,956	435,3925	355,61	513,11	469,30	476,720215
2147	760,39	78,36	17,542	438,3175	365,93	437,54	564,25	470,764038
2148	891,54	78,71	17,042	440,2349	372,56	448,61	654,64	468,390015
2149	754,17	78,80	16,747	440,4340	376,85	521,69	709,99	467,413239
2150	695,09	78,52	16,510	440,5555	379,27	523,22	747,08	465,604889
2151	685,70	79,22	16,246	441,0994	380,95	524,16	781,00	463,689789
2152	680,24	79,31	15,953	439,3755	382,03	524,73	804,13	460,299408
2153	678,30	79,13	15,755	438,1560	382,82	525,18	825,19	457,857666
2154	677,21	78,83	15,444	436,3176	382,90	525,14	839,14	455,911407
2155	676,74	78,44	15,151	435,1036	382,79	524,81	848,43	454,197968
2156	678,44	78,44	14,959	433,9371	382,31	524,23	858,46	452,181885
2157	678,09	79,06	14,646	431,4921	381,18	523,07	864,18	451,108215
2158	676,86	79,71	14,354	429,2503	380,23	521,93	871,25	448,802734
2159	619,06	78,49	14,161	427,3804	379,03	521,01	873,53	447,094513
2160	593,75	78,61	13,854	426,2588	377,60	520,33	872,14	445,766754
2161	582,29	78,66	13,731	424,2677	376,28	518,79	871,34	444,137573
2162	576,51	79,00	13,461	422,0979	374,91	517,92	871,25	442,446045
2163	570,67	78,76	13,266	420,5364	373,71	516,51	871,20	441,277374
2164	562,01	79,06	13,152	419,1612	372,21	514,70	870,29	439,97403
2165	556,35	79,67	12,956	417,7082	370,64	513,59	867,25	438,914825
2166	549,82	79,45	12,763	415,9256	369,45	512,33	862,78	438,704956
2167	543,61	79,12	12,566	413,7541	368,29	510,01	858,70	437,785065
2168	535,83	78,95	12,355	412,3318	366,33	508,38	853,60	437,193207
2169	530,20	79,68	12,256	411,8099	365,03	506,42	846,03	436,673859
2170	524,11	78,70	12,064	410,6736	363,82	504,30	840,63	436,058929
2171	520,58	79,16	11,962	408,8842	362,69	501,82	835,11	434,479492
2172	516,20	78,66	11,767	408,5470	360,92	499,81	831,79	433,319763
2173	518,26	78,97	11,671	406,7902	360,15	497,15	831,72	430,971924
2174	522,13	79,17	11,456	405,8306	358,70	494,75	833,83	428,877319
2175	524,53	78,86	11,263	396,7867	321,00	491,84	772,37	426,839508
2176	515,38	79,70	11,167	390,9541	291,94	490,10	733,23	422,656372
2177	499,78	78,87	10,969	386,2733	272,19	487,07	699,21	419,376831
2178	486,63	79,47	10,852	382,7882	256,94	483,36	664,65	416,202728
2179	471,77	78,68	10,758	380,3363	245,25	481,54	635,51	411,946228
2180	458,03	78,93	10,564	377,4851	235,59	478,61	606,97	408,152557
2181	445,91	78,77	10,466	373,8241	228,11	475,35	584,89	404,940521
2182	437,78	79,10	10,366	371,8319	221,56	473,85	563,36	400,704529
2183	433,66	78,73	10,267	370,9005	216,10	471,12	547,20	397,706238
2184	433,10	79,24	10,170	367,2366	211,46	467,71	539,15	394,250854
2185	433,36	78,44	9,955	365,1907	207,26	464,79	533,74	390,91098
2186	434,90	79,39	9,861	364,1209	203,63	462,23	529,95	388,128418
2187	432,93	79,32	9,670	361,7468	200,46	459,58	524,24	384,299133
2188	434,28	79,34	9,567	358,9881	197,71	457,25	520,36	380,494202
2189	436,43	78,63	9,468	357,0761	194,88	455,20	519,94	376,929504
2190	437,54	78,67	9,373	355,0005	192,55	451,63	517,86	374,333008
2191	436,88	79,11	9,256	354,1829	190,65	448,76	514,47	372,173889
2192	434,37	78,50	9,159	352,9374	188,73	445,53	511,79	371,288727
2193	432,96	78,51	9,059	351,8800	187,04	442,97	509,10	370,205231
2194	431,63	79,46	8,866	349,6599	186,12	441,78	505,87	369,801819
2195	430,58	79,39	8,770	347,2299	184,89	438,70	503,81	369,129639
2196	430,81	78,91	8,670	346,6686	183,84	437,11	501,08	369,509491
2197	429,77	79,47	8,573	346,1597	182,74	435,11	498,61	371,90799
2198	425,15	78,94	8,459	344,4088	181,61	431,71	496,06	373,804596
2199	418,82	78,71	8,359	342,3469	180,84	429,23	490,67	376,082764
2200	410,15	78,83	8,263	340,9167	179,55	426,96	481,51	377,759186
2201	402,88	78,89	8,166	339,1974	178,78	425,07	471,83	378,276489
2202	398,95	79,05	8,068	338,0153	177,89	422,92	465,41	378,968536
2203	395,45	79,22	7,969	336,4966	177,03	422,73	460,33	377,238739

2204	392,30	78,68	7,874	335,6153	176,18	421,54	453,10	377,346039
2205	390,07	78,57	7,774	334,2624	175,27	419,84	446,89	376,475311
2206	389,75	78,79	7,777	332,6923	174,58	418,00	442,78	376,771118
2207	386,97	78,89	7,563	330,8321	173,17	415,95	436,18	376,803162
2208	385,02	78,97	7,563	329,6078	172,11	413,61	432,17	376,154083
2209	383,27	79,04	7,463	327,7387	171,12	411,22	430,07	375,409729
2210	385,83	79,12	7,368	326,8375	170,08	409,09	432,81	374,692932
2211	381,20	79,26	7,269	326,7159	169,04	409,12	430,94	372,070831
2212	378,76	79,45	7,262	325,3816	168,16	407,97	429,48	369,709045
2213	377,24	78,94	7,076	325,8029	167,21	406,14	428,13	369,166901
2214	372,07	79,18	6,959	324,1727	166,39	404,90	426,42	366,173767
2215	367,76	79,81	6,959	324,2038	165,78	403,16	421,78	364,825439
2216	364,45	79,08	6,859	323,3807	165,37	401,72	417,88	362,456177
2217	361,98	79,97	6,765	323,7514	164,59	401,16	413,20	359,575104
2218	361,16	79,28	6,667	323,7754	163,89	398,59	405,83	360,346283
2219	358,19	79,33	6,666	324,4162	163,18	397,33	399,77	359,222473
2220	356,48	79,99	6,570	323,2081	162,62	396,40	394,72	357,909515
2221	355,77	79,54	6,471	321,1151	162,15	394,57	392,08	358,512299
2222	355,19	79,77	6,375	321,1684	161,68	393,26	388,31	358,627655
2223	353,36	78,81	6,375	319,3397	161,12	391,76	385,61	359,228455
2224	350,15	79,55	6,279	318,8218	160,64	390,04	380,51	359,52356
2225	348,05	78,71	6,278	317,7810	160,18	388,49	377,64	360,458008
2226	345,59	78,90	6,159	315,8588	159,96	387,38	374,87	361,599304
2227	343,70	79,02	6,063	315,9471	159,43	386,65	371,31	362,328125
2228	338,51	79,74	5,965	314,3872	159,15	386,35	368,02	363,136017
2229	330,51	79,13	5,869	313,9672	158,94	384,53	363,13	364,996307
2230	324,81	79,17	5,869	313,2208	159,00	385,06	358,34	365,347351
2231	321,80	79,08	5,772	311,8988	158,88	384,91	354,59	366,408905
2232	321,37	79,08	5,772	311,3412	158,56	383,56	350,62	368,554535
2233	321,03	79,05	5,675	310,4240	158,43	382,60	348,28	369,938477
2234	320,30	79,32	5,576	310,6633	158,47	381,43	346,87	371,489899
2235	320,35	79,12	5,576	310,9060	158,58	380,64	345,95	372,71344
2236	319,91	78,88	5,481	309,5592	158,57	380,05	344,08	373,618317
2237	318,92	78,81	5,464	309,5413	158,77	379,55	343,48	374,228455
2238	315,16	78,80	5,362	309,6729	158,82	378,12	340,24	375,633728
2239	313,27	78,73	5,266	309,7065	159,01	377,98	336,37	376,306976
2240	311,84	78,28	5,264	309,1617	159,20	377,31	334,29	376,727722
2241	309,41	78,50	5,167	309,7877	159,22	376,68	330,45	376,960205
2242	307,22	78,50	5,072	309,1738	159,46	376,28	327,37	377,129578
2243	304,71	78,17	4,975	309,7892	159,64	375,76	324,58	377,658264
2244	303,81	78,15	4,974	310,0145	160,01	375,18	321,53	377,228607
2245	302,42	78,92	4,876	309,1946	160,20	374,69	319,87	377,237579
2246	300,45	78,82	4,876	309,6441	160,38	374,23	318,19	377,311493
2247	299,00	78,57	4,780	309,0572	160,58	373,84	316,89	377,431427
2248	297,78	78,53	4,779	309,1973	160,83	373,08	315,25	376,763733
2249	296,36	78,28	4,682	308,3280	160,84	372,39	313,53	376,337524
2250	294,02	78,50	4,681	308,5378	160,74	371,84	312,03	376,256439
2251	292,26	78,33	4,565	309,4207	161,04	371,48	310,07	375,932373
2252	290,62	78,06	4,564	309,4400	161,43	370,79	308,40	375,442993
2253	288,17	78,20	4,467	309,2574	161,63	369,86	306,41	374,750031
2254	286,63	77,95	4,468	308,9745	161,81	368,83	304,69	374,155609
2255	285,21	78,20	4,371	309,0292	161,92	368,47	302,91	373,262695
2256	283,95	78,26	4,369	308,2030	161,93	367,61	301,52	372,641602
2257	282,82	78,29	4,370	308,3680	162,16	366,99	299,69	371,86319
2258	281,62	78,62	4,273	307,8318	162,16	365,62	298,84	371,200165
2259	281,69	78,89	4,175	309,3318	162,30	365,19	296,98	370,964905
2260	280,92	78,27	4,177	308,5998	162,26	364,45	295,31	370,193237
2261	280,47	78,37	4,077	308,1264	162,43	364,15	294,65	370,524261
2262	279,72	77,85	4,079	308,0950	162,41	363,62	293,90	369,727814
2263	279,63	78,37	3,980	308,1856	162,44	363,38	293,50	369,649048
2264	279,25	78,73	3,981	308,2429	162,36	362,69	292,97	369,367523
2265	279,34	78,51	3,982	307,6483	162,30	362,35	293,10	369,086365
2266	279,18	78,61	3,885	307,7362	162,33	361,72	292,80	368,987366
2267	278,70	78,39	3,766	307,6067	162,33	360,86	292,45	368,017029
2268	278,98	78,25	3,767	307,9068	162,45	360,72	292,08	368,307861
2269	278,40	78,29	3,670	306,9671	162,51	360,10	291,50	368,143158
2270	278,05	78,15	3,670	307,4003	162,58	359,59	290,84	367,417938
2271	277,87	78,23	3,573	307,4200	162,50	358,70	290,48	367,347748
2272	277,41	78,49	3,572	307,7954	162,57	357,96	289,31	367,074463
2273	276,66	77,93	3,476	307,5257	162,97	357,80	288,98	366,757385
2274	275,68	78,05	3,475	307,2392	163,02	357,52	288,12	366,448029
2275	275,18	77,98	3,378	307,5106	163,15	356,86	287,24	366,204224
2276	274,15	78,31	3,378	307,4867	163,31	356,84	286,39	365,899475
2277	273,04	78,61	3,378	308,1316	163,42	356,31	285,41	365,807648
2278	272,31	78,28	3,280	307,9578	163,81	356,06	284,28	365,609528
2279	270,42	78,10	3,261	308,5059	164,07	355,51	283,01	365,343384

2280	269,21	77,87	3,183	308,9387	164,18	354,92	281,21	365,057373
2281	267,94	78,37	3,184	308,5615	164,39	354,12	279,71	364,863831
2282	266,45	77,93	3,067	308,1700	164,67	353,58	279,01	364,666229
2283	265,49	78,31	3,068	309,8570	164,68	354,02	277,14	364,874329
2284	264,57	77,98	3,067	308,3107	164,99	354,00	276,01	364,546143
2285	263,49	78,41	2,969	308,3508	165,10	353,96	274,40	364,481903
2286	262,32	78,28	2,969	308,5056	165,02	353,40	273,88	364,556091
2287	261,75	78,17	2,873	308,2236	165,23	353,42	273,20	364,502991
2288	261,64	78,19	2,873	308,3895	165,27	353,48	272,39	364,676025
2289	261,86	78,21	2,775	307,8907	165,41	353,24	272,27	364,865143
2290	261,91	78,19	2,775	307,7375	165,55	353,21	272,17	364,813141
2291	262,47	78,39	2,775	308,7444	165,60	353,15	271,21	365,43869
2292	262,38	78,82	2,677	307,0298	166,14	352,97	271,56	365,155029
2293	263,51	79,01	2,679	308,1049	166,24	353,18	270,59	365,744537
2294	263,86	78,69	2,678	307,9467	166,55	353,73	271,35	366,364258
2295	264,10	79,22	2,580	306,3338	167,04	353,79	271,26	366,640259
2296	265,71	79,05	2,580	307,5861	167,52	354,16	271,69	367,661072
2297	271,44	78,72	2,483	307,0279	167,95	353,86	273,21	368,680237
2298	274,38	78,58	2,484	306,1397	168,31	353,63	275,45	369,411682
2299	269,27	79,02	2,387	305,6685	169,08	353,73	275,59	370,738525
2300	263,53	79,03	2,387	305,4712	169,35	353,17	273,58	371,071014
2301	254,74	78,75	2,387	304,9923	169,95	352,56	267,81	371,296722
2302	247,67	79,55	2,386	303,7125	170,19	352,85	262,38	369,711151
2303	242,94	79,26	2,269	303,0794	170,40	352,12	257,11	369,010529
2304	239,42	79,07	2,270	302,4877	170,44	351,82	252,93	367,270599
2305	236,81	79,27	2,269	302,0187	170,33	352,08	249,08	366,255829
2306	234,59	78,87	2,269	301,4610	170,29	352,14	245,28	364,988037
2307	232,76	78,89	2,172	300,9554	170,32	351,63	242,41	363,729034
2308	230,94	79,18	2,173	300,3813	170,30	352,30	239,41	361,719849
2309	229,21	79,00	2,172	299,0968	170,32	351,89	236,66	361,104858
2310	227,70	79,16	2,173	298,9454	170,27	351,63	233,86	359,788757
2311	226,56	79,23	2,172	296,8220	170,59	351,43	232,14	358,653198
2312	225,17	79,10	2,075	296,1131	170,72	350,59	229,81	357,43573
2313	224,15	79,37	2,172	297,2069	171,04	351,74	228,45	356,070862
2314	223,05	79,08	2,075	294,5386	171,22	351,44	226,83	355,109436
2315	222,50	79,52	2,075	294,7689	171,62	351,73	225,12	354,069031
2316	221,69	79,25	1,978	294,3211	171,62	351,82	223,62	353,346802
2317	220,72	79,45	1,977	293,8257	171,97	352,09	222,24	352,129089
2318	220,00	79,13	1,978	293,8749	172,27	351,99	220,65	351,554749
2319	219,16	79,80	1,977	293,6485	172,59	352,79	219,60	350,018921
2320	218,19	79,62	1,978	292,6128	173,02	352,62	218,57	349,127625
2321	217,63	79,79	1,886	292,2087	173,34	351,92	217,93	347,976257
2322	217,06	79,39	1,880	290,9397	173,70	351,52	216,92	347,19577
2323	216,24	79,37	1,881	291,2224	173,97	351,18	216,14	346,153961
2324	216,05	79,45	1,880	290,3427	174,49	350,96	215,28	345,281403
2325	215,26	79,35	1,788	290,3445	174,73	350,41	214,92	344,613098
2326	214,65	79,44	1,880	289,2219	175,04	349,88	213,93	343,377502
2327	214,27	79,66	1,880	289,4547	175,45	350,24	212,90	342,761536
2328	213,50	79,48	1,856	288,5554	175,83	350,69	212,18	341,622009
2329	212,63	79,50	1,783	288,3219	176,22	351,23	211,41	340,474823
2330	212,33	79,14	1,783	289,2633	176,30	351,15	211,26	340,085632
2331	211,67	79,48	1,783	289,0049	176,70	351,18	210,57	339,371277
2332	210,68	79,40	1,690	288,2544	177,25	351,07	210,36	337,875244
2333	209,67	79,35	1,783	288,2458	177,50	351,42	209,13	337,433319
2334	208,59	79,49	1,688	288,2258	177,94	351,18	208,28	336,929718
2335	207,41	79,59	1,686	289,7447	178,09	351,83	206,94	335,97403
2336	206,25	79,75	1,686	288,4023	178,61	352,21	205,86	335,446777
2337	205,08	79,66	1,685	287,5291	178,94	351,94	204,67	334,485962
2338	204,46	79,62	1,686	287,0525	179,19	350,47	204,15	333,973053
2339	202,92	79,49	1,588	287,4959	179,39	350,25	202,60	333,514557
2340	201,61	79,62	1,589	287,3096	179,71	350,93	201,81	332,319153
2341	200,69	79,56	1,588	286,2007	179,81	350,89	200,75	331,917023
2342	199,45	79,46	1,588	285,4533	180,10	351,25	199,68	330,877167
2343	198,49	79,44	1,588	284,2070	180,17	350,88	199,07	329,810974
2344	198,10	79,62	1,588	284,5736	180,25	350,85	197,86	329,15683
2345	197,60	79,42	1,474	283,6293	180,53	350,04	196,88	328,446167
2346	196,95	79,54	1,471	284,1190	180,67	350,29	196,14	327,605835
2347	196,52	79,66	1,472	282,3414	180,86	350,89	195,34	326,67627
2348	196,15	79,42	1,472	282,9327	181,00	350,75	194,58	326,096771
2349	195,22	79,31	1,472	281,8112	181,12	349,44	193,91	325,428223
2350	195,07	79,47	1,471	280,6324	181,41	349,50	193,59	324,374878
2351	194,80	79,56	1,471	281,5467	181,53	349,14	192,71	323,933777
2352	194,14	79,47	1,471	279,8532	181,98	348,36	192,34	323,143372
2353	193,61	79,47	1,374	280,5245	182,25	348,33	191,77	322,578217
2354	193,34	79,19	1,374	280,0598	182,61	347,83	191,29	322,23465
2355	192,95	79,44	1,374	278,6306	183,10	346,48	191,12	321,570618

2356	192,65	79,45	1,374	279,8196	183,49	347,15	190,27	320,629669
2357	191,81	80,06	1,374	278,4864	183,83	346,20	190,10	319,663391
2358	191,79	80,05	1,277	278,2139	184,34	346,42	189,38	319,429504
2359	191,36	80,08	1,276	276,4418	185,03	346,31	189,16	318,487335
2360	191,21	80,11	1,276	277,1798	185,25	346,91	188,66	317,648254
2361	190,94	79,93	1,277	277,1128	185,65	346,51	188,31	317,717041
2362	190,59	79,42	1,277	275,8659	186,31	345,46	188,16	316,97229
2363	190,13	79,94	1,276	276,0072	186,74	344,77	187,24	316,644806
2364	189,93	79,81	1,180	277,1540	187,26	345,02	187,01	316,0354
2365	189,44	79,73	1,179	275,6391	187,95	344,25	186,84	315,581177
2366	189,34	79,84	1,179	275,2695	188,55	343,57	186,14	315,066772
2367	188,90	79,83	1,179	274,8029	189,13	343,27	186,01	314,178741
2368	188,62	79,69	1,179	274,9399	189,71	343,53	185,70	313,931519
2369	188,34	79,54	1,180	273,3862	190,17	342,23	185,34	313,421387
2370	188,42	79,76	1,082	273,2103	190,64	341,25	185,00	312,960144
2371	188,34	79,65	1,082	273,8694	191,00	340,85	185,04	312,880005
2372	188,09	79,87	1,180	272,3092	191,65	339,55	185,16	312,357208
2373	188,00	79,79	1,082	273,0819	192,11	339,64	185,05	312,114288
2374	187,88	79,55	1,082	272,2715	192,58	319,94	184,81	311,499603
2375	187,82	79,99	1,082	271,3508	193,07	339,73	184,82	311,202759
2376	187,41	79,93	1,082	270,4733	193,70	338,80	185,00	310,534882
2377	187,22	80,07	1,082	271,1254	194,19	338,91	184,73	310,413391
2378	186,72	79,92	0,985	269,8198	194,52	338,15	184,55	309,891602
2379	186,70	79,95	1,082	269,8510	195,24	336,93	184,23	309,269775
2380	186,43	79,95	0,985	268,8295	195,64	335,77	184,26	309,036469
2381	186,18	79,23	0,985	268,9078	196,14	299,75	183,33	308,492584
2382	185,65	79,92	0,985	269,1377	196,39	335,71	182,27	308,008331
2383	185,28	79,99	0,887	268,3505	196,87	335,85	181,97	307,195129
2384	185,14	79,85	0,888	267,5838	197,43	334,75	181,92	306,790863
2385	184,26	80,06	0,888	269,0642	197,59	335,03	181,10	306,519287
2386	183,47	79,78	0,887	268,4366	197,76	334,04	180,69	306,001984
2387	183,10	79,76	0,887	267,7748	197,60	333,90	180,24	305,654449
2388	182,68	79,97	0,887	266,9717	197,67	333,29	180,17	304,910309
2389	182,75	80,13	0,886	266,7539	197,79	332,72	180,11	304,236816
2390	182,18	80,04	0,888	265,7887	197,93	332,91	179,93	303,311707
2391	181,97	80,13	0,887	265,5969	198,07	331,94	179,61	302,642792
2392	181,58	79,76	0,790	267,0451	198,20	331,19	178,58	302,329163
2393	181,36	79,81	0,790	265,4216	198,60	329,47	178,74	301,560333
2394	181,08	79,77	0,790	265,1365	198,82	329,27	178,72	300,558258
2395	180,59	80,20	0,790	266,1649	198,84	329,16	178,14	300,292084
2396	179,65	80,08	0,790	264,7123	199,23	328,20	177,75	299,984192
2397	179,44	80,11	0,790	264,8283	199,49	327,22	177,34	299,212067
2398	178,92	80,05	0,673	263,2824	199,96	326,34	177,07	298,419067
2399	178,52	79,78	0,790	263,6382	200,39	325,95	176,97	297,974335
2400	178,02	80,03	0,673	263,1497	200,54	325,34	176,09	297,311707
2401	177,39	79,89	0,674	262,8712	201,00	324,02	176,14	296,796478
2402	177,23	80,03	0,674	263,0368	201,34	324,18	175,66	296,066589
2403	177,14	80,03	0,673	262,4888	201,53	322,81	175,59	295,688873
2404	176,96	80,11	0,673	262,8387	201,96	322,14	175,14	295,180695
2405	176,65	80,10	0,673	261,6961	202,37	322,01	174,80	294,760925
2406	176,37	80,09	0,673	261,7167	202,64	320,86	174,22	294,383209
2407	176,45	80,06	0,576	260,9698	203,05	321,06	174,59	293,679718
2408	175,84	80,64	0,673	262,0121	203,30	321,79	173,81	293,035767
2409	175,22	80,47	0,576	261,4751	203,73	321,10	173,51	292,340912
2410	175,02	80,06	0,576	260,1687	203,90	321,02	173,46	292,107666
2411	174,93	80,06	0,576	259,9904	204,20	320,34	173,32	291,401581
2412	174,28	80,33	0,576	258,1319	204,40	319,68	173,33	290,837646
2413	173,92	80,30	0,576	259,0637	204,52	319,31	173,03	290,629181
2414	173,72	80,22	0,479	257,9956	205,01	318,93	172,78	290,055756
2415	173,19	80,31	0,479	257,4238	205,11	318,51	172,34	289,472656
2416	172,91	80,20	0,488	257,4115	205,34	317,91	172,33	289,284943
2417	172,60	80,28	0,479	256,0090	205,95	316,23	172,63	288,63858
2418	172,52	80,07	0,479	256,4548	206,13	316,22	172,23	288,313263
2419	172,48	80,27	0,479	256,0745	206,40	315,32	172,24	288,071411
2420	172,75	80,22	0,479	255,0757	206,88	314,22	172,03	287,003387
2421	172,84	80,16	0,409	254,3336	207,29	313,62	171,95	286,709442
2422	173,14	80,33	0,382	253,4431	207,71	312,70	172,22	286,230408
2423	173,22	80,36	0,479	252,8829	208,11	312,68	172,39	285,710876
2424	173,35	80,26	0,381	251,4160	208,40	312,30	172,62	285,07901
2425	173,28	80,35	0,381	252,0947	208,83	310,97	172,61	284,25708
2426	173,29	80,31	0,381	252,2880	209,21	310,83	172,20	284,41803
2427	173,29	79,96	0,381	250,3315	209,94	309,51	172,47	283,913757
2428	173,10	80,23	0,381	250,5422	210,75	309,17	172,54	283,095764
2429	172,72	80,29	0,381	250,5078	211,32	308,55	172,36	282,828339
2430	172,49	80,26	0,284	248,6111	211,84	308,37	172,27	282,356628
2431	171,92	80,24	0,284	249,1780	211,95	307,92	171,79	282,246185

2432	172,10	80,48	0,321	247,9902	212,65	307,22	172,21	281,668854
2433	171,96	80,36	0,284	248,2904	213,16	307,21	172,05	281,137146
2434	171,69	80,67	0,284	247,3473	213,46	306,33	171,73	280,834412
2435	171,33	80,36	0,284	248,3312	213,61	305,73	171,54	280,822052
2436	171,05	80,21	0,187	247,5621	214,22	305,06	171,50	280,348389
2437	170,88	80,27	0,284	246,4750	214,62	304,18	171,34	279,910767
2438	170,49	80,35	0,284	246,7922	214,91	303,49	170,95	279,657867
2439	170,36	80,08	0,187	245,5549	215,42	303,35	170,90	279,115234
2440	170,09	80,04	0,186	245,0403	215,97	302,90	170,83	278,551941
2441	170,20	80,13	0,187	244,6509	216,25	302,40	170,46	278,271179
2442	169,94	80,23	0,187	244,2306	216,46	301,94	170,30	277,705261
2443	169,94	80,41	0,186	244,0071	216,61	301,72	170,13	277,30658
2444	169,91	80,24	0,187	244,4557	216,84	301,80	169,72	277,116791
2445	169,69	80,12	0,089	243,4821	217,09	302,17	169,48	276,592194
2446	169,24	80,11	0,089	243,6282	217,33	301,24	169,42	276,360748
2447	168,90	80,24	0,089	242,4749	217,54	300,80	169,58	275,810333
2448	168,69	80,08	0,089	241,8165	217,95	276,71	169,57	275,407379
2449	168,62	79,95	0,089	242,3289	217,97	299,12	169,30	275,054688
2450	168,35	79,99	0,090	241,1432	218,15	298,57	169,28	274,571655
2451	168,20	80,08	0,089	240,9174	218,36	297,65	169,00	273,994629
2452	168,03	79,83	0,057	240,4492	218,57	297,28	168,61	273,267059
2453	99,18	75,37	7,111	75,5406	75,61	75,77	79,80	75,7717209
2454	274,45	75,57	6,951	75,5438	75,64	75,75	121,06	76,0008087
2455	543,91	75,87	6,668	75,7016	75,83	75,69	240,92	76,8096466
2456	748,13	76,22	6,374	76,3964	76,26	75,79	375,72	78,2415543
2457	796,38	76,57	6,065	78,4789	77,41	75,83	458,50	81,1940308
2458	897,56	76,85	5,577	82,4637	80,27	76,10	531,04	86,0060806
2459	880,78	77,10	5,073	87,7769	84,95	76,73	614,91	93,2104797
2460	892,46	77,43	4,469	93,9210	90,43	77,63	681,26	102,746216
2461	898,17	77,66	4,179	101,1391	96,16	78,93	723,91	112,500137
2462	866,78	77,66	3,770	109,2950	102,72	80,99	759,01	124,309097
2463	868,01	77,98	3,381	118,2856	110,78	83,31	791,93	139,036804
2464	865,75	77,89	3,072	128,2194	120,31	85,84	824,62	156,035034
2465	778,62	78,35	2,877	139,1669	131,06	88,93	825,14	174,819031
2466	699,27	77,87	2,720	150,6201	142,68	93,00	794,34	191,836441
2467	674,25	77,85	2,585	162,2867	155,18	96,41	766,75	207,309433
2468	676,27	77,87	4,299	172,5954	168,73	107,65	749,91	223,413589
2469	505,61	78,36	21,019	184,7416	180,13	130,82	693,67	239,815399
2470	428,20	78,21	17,037	195,9300	190,66	120,29	642,99	248,406799
2471	417,47	78,10	17,254	205,3701	198,34	125,38	600,29	252,980698
2472	640,40	78,18	16,940	212,7050	204,55	131,04	626,46	255,60556
2473	742,76	78,17	16,648	219,1645	208,49	152,57	681,25	261,852386
2474	765,57	78,35	16,364	225,5041	212,12	137,67	731,38	269,623962
2475	762,03	78,48	16,051	232,0567	216,55	145,85	764,90	278,475281
2476	754,72	78,74	15,757	237,8987	221,55	149,18	788,71	287,365662
2477	746,54	78,56	15,561	244,2195	226,55	169,15	802,38	296,449127
2478	737,65	78,81	15,250	250,5787	231,58	173,36	808,20	305,605164
2479	725,59	78,37	14,958	256,7620	235,84	177,48	804,41	314,640015
2480	709,85	78,68	14,743	262,3764	241,15	181,18	790,81	322,837494
2481	677,79	78,78	14,552	268,0817	245,81	159,43	766,98	330,558716
2482	666,34	78,76	14,456	272,8943	250,56	176,75	749,69	337,682037
2483	665,00	78,47	14,163	276,9904	255,73	192,92	737,46	344,155396
2484	662,86	78,76	14,066	282,0122	259,13	196,60	726,43	350,796814
2485	658,86	78,47	13,751	286,5453	263,55	200,33	718,85	356,727295
2486	654,76	78,61	13,561	291,2224	267,16	203,92	710,15	362,187897
2487	653,82	78,66	13,398	296,8164	270,29	207,68	703,67	366,670197
2488	653,30	78,75	13,268	302,0477	273,98	211,39	696,95	370,973877
2489	653,12	78,76	13,050	307,1172	278,01	214,97	693,03	375,344971
2490	647,78	78,82	12,861	312,4062	281,60	218,76	689,09	379,518677
2491	641,71	78,65	12,667	317,0705	284,23	189,08	682,14	383,350342
2492	636,07	78,90	12,565	321,2705	287,89	186,74	677,05	386,500549
2493	631,18	78,89	12,355	325,7669	291,04	229,49	671,79	388,980743
2494	627,45	79,01	12,159	330,7412	293,41	233,38	666,39	392,019012
2495	626,00	78,90	12,060	334,9523	295,75	237,07	660,86	394,433899
2496	624,94	78,84	11,869	339,2134	298,32	241,15	657,56	396,219696
2497	622,28	78,87	11,670	344,0090	300,91	245,51	655,22	398,700409
2498	616,91	78,96	11,557	348,7727	302,78	249,99	651,58	400,486389
2499	612,32	79,08	11,384	352,3378	305,30	254,18	647,52	402,139404
2500	614,77	79,03	11,265	356,0344	308,37	258,49	644,54	403,539337
2501	619,06	78,95	11,164	359,7643	310,89	262,93	644,63	404,823883
2502	627,94	78,87	10,973	362,9119	312,96	267,42	646,12	407,590759
2503	632,33	79,08	10,758	364,9821	315,75	271,79	645,03	409,734894
2504	622,24	79,16	10,564	367,4847	317,05	275,90	642,56	411,797363
2505	612,55	79,03	10,463	371,1826	319,87	281,12	639,59	412,952789
2506	608,73	79,38	10,368	375,7723	321,67	286,00	636,10	414,010864
2507	601,76	79,34	10,270	379,6090	323,73	290,88	631,03	415,159607

2508	599,63	79,27	10,058	382,9260	326,39	295,61	626,38	416,210602
2509	594,60	79,26	9,961	386,2035	329,12	300,65	622,12	417,582611
2510	583,88	78,93	9,763	390,1752	331,00	305,67	618,71	419,161713
2511	557,66	79,06	9,765	393,8127	334,02	310,43	612,49	420,023224
2512	548,88	79,58	9,572	396,9930	336,12	315,49	604,37	420,154572
2513	547,23	79,67	9,473	398,4723	339,41	320,45	597,04	419,526154
2514	542,36	79,31	9,375	400,6172	341,90	316,76	591,93	419,328583
2515	542,70	79,42	9,159	402,1979	344,37	329,25	587,23	418,354065
2516	549,87	79,20	9,066	404,0969	346,17	333,40	586,29	417,61377
2517	557,46	78,76	8,967	405,3129	349,55	252,41	587,86	417,531311
2518	584,33	79,29	8,868	406,5075	351,49	264,42	598,74	417,833679
2519	612,79	79,28	8,674	407,1518	353,99	346,30	618,35	420,062256
2520	625,39	79,03	8,461	408,5583	356,69	350,38	635,35	423,684204
2521	631,84	79,24	8,266	409,1747	359,61	341,62	648,88	427,533447
2522	640,30	79,40	8,169	409,9761	361,50	359,00	661,74	431,562927
2523	646,29	79,39	7,975	410,9284	365,10	363,23	672,75	436,067169
2524	653,94	79,65	7,779	412,9532	366,86	368,32	684,13	440,07254
2525	658,03	79,16	7,565	413,9959	369,17	372,97	695,69	443,99823
2526	655,73	79,11	7,374	408,5719	317,37	377,18	631,48	444,837524
2527	660,10	78,75	7,177	408,4685	295,98	382,06	615,01	446,343506
2528	668,58	79,28	6,867	408,8421	281,26	386,92	607,82	447,837189
2529	688,03	79,26	6,672	409,6283	270,95	391,82	608,29	449,637695
2530	705,44	79,59	6,477	410,8315	263,41	396,94	612,88	451,475616
2531	714,71	79,48	6,225	412,5568	257,99	401,62	621,66	453,292053
2532	711,09	79,67	5,972	414,6292	254,13	406,42	628,04	455,602478
2533	706,70	79,71	5,777	415,8537	251,64	411,38	632,86	456,630035
2534	707,84	79,72	5,582	418,2964	250,03	415,89	634,78	458,431946
2535	708,25	79,52	5,367	420,3429	249,30	420,75	637,04	459,960602
2536	709,70	79,81	5,174	423,2220	249,06	425,40	639,51	461,779205
2537	710,50	80,02	4,979	424,7198	249,17	429,87	639,83	462,928192
2538	704,61	79,92	4,784	427,1728	249,26	434,80	639,44	464,512268
2539	701,04	79,86	4,571	429,5439	250,12	439,11	637,75	466,211517
2540	696,99	79,71	4,377	431,7112	251,13	443,94	636,77	467,680237
2541	691,68	79,95	4,279	434,5331	252,21	448,26	632,10	469,245605
2542	681,63	79,91	4,083	436,9548	253,26	452,61	624,76	470,786377
2543	666,27	80,33	3,987	440,1245	254,71	457,44	611,56	472,358978
2544	652,22	79,75	3,888	444,1871	260,04	461,51	601,72	474,304993
2545	647,51	80,60	3,674	456,2848	300,84	467,33	651,77	479,582886
2546	641,25	80,35	3,577	463,1256	324,62	472,65	662,48	484,716156
2547	629,97	79,97	3,480	468,1381	344,13	477,18	666,32	490,142517
2548	623,19	80,21	3,382	473,1645	360,82	481,76	667,00	494,985413
2549	611,10	80,17	3,285	475,7838	375,83	485,75	664,06	498,604065
2550	596,83	80,17	3,188	480,5736	387,81	287,58	657,65	502,443573
2551	589,95	79,90	3,071	482,5015	400,73	274,48	649,15	505,41037
2552	586,02	79,64	2,973	485,2987	411,20	274,89	642,96	508,205536
2553	581,98	80,03	2,877	487,9214	421,84	279,00	637,17	510,279236
2554	575,90	80,22	2,876	490,4829	430,53	303,64	630,70	512,660522
2555	573,90	79,84	2,779	492,2705	439,44	308,10	624,53	514,392517
2556	569,23	80,06	2,779	492,7063	447,12	302,04	619,40	516,494141
2557	567,08	80,36	2,681	492,9248	456,24	308,92	613,24	518,201721
2558	563,97	79,44	2,584	494,6062	463,85	310,35	609,24	519,544922
2559	564,12	79,97	2,487	495,3669	471,08	307,09	605,48	521,133667
2560	564,36	79,74	2,485	495,9872	478,86	307,53	602,13	522,303101
2561	565,01	79,96	2,389	497,1648	485,80	314,34	599,06	523,468384
2562	564,98	79,77	2,272	496,4702	492,89	315,49	596,73	524,684814
2563	564,05	79,83	2,174	497,3470	498,64	319,64	595,78	525,12439
2564	563,11	79,89	2,175	497,9476	505,61	335,94	593,65	526,305359
2565	562,24	80,00	2,077	495,0634	511,65	332,53	590,70	526,858887
2566	560,98	79,33	1,980	495,5735	517,82	311,01	588,16	528,105164
2567	563,06	80,01	1,980	494,6507	522,45	316,89	587,78	528,286072
2568	395,15	79,72	18,442	499,7483	528,20	283,46	557,14	537,104065
2569	758,78	79,75	18,047	499,2106	533,35	278,19	630,88	531,710938
2570	794,08	80,59	17,545	499,0233	535,63	272,16	710,39	529,493042
2571	678,26	80,44	17,347	498,4396	535,82	283,92	750,41	526,926086
2572	653,39	80,79	17,036	498,2198	536,46	287,53	781,56	523,550659
2573	647,58	80,09	16,749	497,2786	535,31	285,18	805,96	520,638611
2574	643,36	80,71	16,453	494,6346	533,69	286,95	826,30	516,676819
2575	639,47	80,14	16,240	493,2159	529,77	284,64	840,79	513,269104
2576	630,93	80,47	15,955	490,4434	527,26	284,55	851,64	510,19928
2577	623,40	81,07	15,754	486,9259	524,37	286,66	857,29	507,650879
2578	616,53	80,82	15,563	484,8960	519,52	290,06	859,44	504,429901
2579	610,46	80,30	15,246	481,4049	516,88	289,56	859,77	502,185669
2580	606,62	80,88	15,060	478,7083	512,59	290,46	859,61	500,100586
2581	601,50	80,55	14,862	475,7457	508,31	300,25	856,93	497,540161
2582	595,04	80,55	14,650	472,1873	504,38	303,62	852,79	495,311584
2583	555,20	80,49	14,550	468,4692	500,06	309,02	846,00	493,088623

2584	522,03	80,87	14,355	466,4258	495,09	310,01	828,03	490,687378
2585	503,89	80,42	14,261	462,2812	491,28	313,16	808,98	487,977417
2586	483,73	80,56	14,063	452,2090	416,98	314,15	711,28	484,935577
2587	466,16	80,61	13,948	445,9763	379,25	340,94	664,95	481,860901
2588	450,69	80,06	13,853	440,3714	352,93	468,63	624,31	476,95816
2589	438,30	79,86	13,652	434,4042	333,11	455,54	590,54	471,756836
2590	428,04	80,13	13,560	429,4172	316,88	447,44	562,37	466,557587
2591	418,99	80,07	13,462	424,0235	303,94	473,70	538,25	459,777466
2592	410,45	80,13	13,362	418,8122	293,05	439,92	512,80	454,697815
2593	401,28	79,49	13,264	413,6547	283,44	388,69	491,79	448,547089
2594	392,30	79,72	13,144	409,7756	274,56	483,13	472,86	442,409424
2595	382,23	79,64	13,052	405,1260	266,81	453,99	453,42	435,914551
2596	373,96	79,78	12,953	400,5962	260,22	463,45	435,64	431,000092
2597	366,77	80,03	12,856	395,6778	254,40	411,15	419,32	426,114136
2598	359,54	79,72	12,758	393,1597	248,66	305,93	403,54	421,389343
2599	353,12	79,50	12,663	387,6373	243,96	393,85	389,04	416,241455
2600	349,41	79,68	12,564	384,1110	239,35	399,06	377,36	412,373199
2601	347,03	79,61	12,467	379,4540	235,09	429,12	368,11	408,707306
2602	348,36	79,79	12,346	376,4326	231,34	424,87	363,80	404,446411
2603	355,50	79,89	12,254	371,5417	227,16	420,39	366,66	400,514252
2604	369,15	79,74	12,156	368,8676	224,03	394,02	378,50	396,91214
2605	376,88	80,07	11,957	365,5895	221,12	417,08	387,90	393,313812
2606	372,22	79,65	11,861	362,6927	218,23	392,57	388,10	390,682648
2607	363,11	80,02	11,764	359,6707	215,44	388,79	382,23	388,966461
2608	353,38	80,00	11,763	356,9500	212,91	376,97	375,58	386,383484
2609	343,16	79,99	11,667	353,8275	210,99	423,77	366,47	384,030945
2610	334,11	79,35	11,552	351,0172	208,29	424,66	356,95	381,339417
2611	322,60	79,65	11,451	347,6929	205,72	393,53	344,43	378,811768
2612	310,75	79,27	11,455	344,8898	203,28	367,16	332,05	376,044373
2613	301,23	79,11	11,353	341,3350	200,96	451,95	321,30	373,331635
2614	298,07	79,08	11,260	340,4789	198,71	422,65	313,31	371,106323
2615	296,09	79,26	11,162	337,1831	196,52	446,76	307,57	368,996155
2616	295,81	79,11	11,162	333,8120	194,48	443,98	303,19	366,674652
2617	299,92	78,91	11,161	331,8882	192,60	441,44	301,91	364,702057
2618	299,73	79,51	11,063	329,8179	190,69	439,25	301,36	364,120239
2619	298,24	79,29	10,963	326,5542	189,29	436,22	301,29	362,397034
2620	293,86	79,00	10,848	323,7842	187,83	432,87	298,49	360,272156
2621	288,56	79,05	10,749	320,7356	186,34	429,44	295,48	357,984741
2622	284,87	78,97	10,751	318,6139	185,14	426,60	292,04	355,030426
2623	281,82	78,71	10,652	316,4102	183,75	423,68	289,48	352,689636
2624	277,80	79,04	10,556	313,1599	182,38	420,45	286,27	349,46048
2625	273,96	79,16	10,556	310,7295	181,27	416,62	282,61	347,529663
2626	272,05	78,86	10,462	308,6991	180,39	400,10	280,14	344,656006
2627	270,43	78,76	10,360	306,0942	179,42	368,72	277,38	342,687683
2628	271,19	78,67	10,263	305,4411	178,52	408,64	275,35	340,678894
2629	270,48	78,94	10,168	302,3995	177,75	405,75	273,93	339,174896
2630	270,62	79,42	10,165	300,8757	177,03	378,48	273,08	337,615723
2631	270,42	78,98	10,049	300,0490	176,39	400,02	271,66	336,364227
2632	271,22	79,08	10,052	297,5145	175,64	396,74	271,11	334,306763
2633	269,50	79,03	9,952	296,3595	174,87	394,54	270,37	332,769531
2634	268,96	78,84	9,855	295,8442	174,59	392,89	270,05	331,59906
2635	268,73	79,29	9,857	295,2301	174,20	391,16	269,47	330,3414
2636	268,49	79,13	9,759	292,7454	173,73	388,56	269,62	328,781891
2637	268,06	79,32	9,658	292,4963	173,45	386,73	269,40	328,460938
2638	267,93	79,19	9,561	291,0893	173,33	384,47	269,24	327,968567
2639	269,03	79,10	9,562	291,1256	173,17	383,07	269,61	327,499207
2640	270,88	79,19	9,466	290,0446	173,12	381,61	270,55	326,260254
2641	272,60	79,25	9,370	290,0760	172,98	331,00	271,37	326,246063
2642	275,15	78,93	9,251	289,3054	172,93	313,29	273,78	325,023071
2643	276,61	79,19	9,253	287,6382	172,99	374,45	276,39	325,320618
2644	278,75	79,09	9,101	286,6412	173,06	305,32	279,34	324,430511
2645	283,46	79,50	9,059	286,0738	173,16	367,14	281,98	323,858246
2646	289,58	79,01	8,960	286,7132	173,26	370,96	285,01	323,691193
2647	293,56	79,06	8,862	286,2284	173,45	370,02	289,99	322,651062
2648	297,47	79,12	8,766	285,7014	173,41	367,71	294,89	323,170258
2649	299,65	79,07	8,764	285,2796	173,90	361,99	298,25	323,361328
2650	300,32	78,96	8,668	285,2634	173,91	364,42	299,64	323,827728
2651	299,00	79,04	8,569	285,2600	173,88	362,40	298,72	323,845795
2652	295,44	79,04	8,570	284,7091	174,00	324,77	298,25	324,34259
2653	293,66	78,95	8,471	284,4084	174,21	338,46	297,06	325,178284
2654	294,42	78,80	8,401	284,2455	174,51	334,93	295,91	324,536621
2655	294,44	78,80	8,356	283,8520	174,41	356,63	295,48	325,971375
2656	297,15	78,90	8,260	283,8804	174,25	355,93	294,74	326,648285
2657	299,42	78,80	8,261	283,1281	174,17	353,01	294,58	327,500488
2658	297,91	78,66	8,066	283,1946	174,13	312,60	293,25	328,933319
2659	296,48	78,62	8,063	283,2326	173,90	289,21	292,25	329,65979

2660	293,77	78,55	7,967	282,6396	173,42	298,13	290,93	329,865265
2661	290,68	78,59	7,964	282,1404	172,98	297,08	289,30	329,469452
2662	288,36	78,68	7,872	282,2194	172,51	292,27	286,48	330,272247
2663	288,39	78,79	7,771	281,8292	172,02	330,30	284,69	330,125122
2664	286,66	78,56	7,657	282,7736	171,42	302,96	283,70	329,677338
2665	287,21	78,67	7,655	282,4767	170,81	309,61	284,06	328,831573
2666	294,06	78,59	7,560	283,0844	170,33	287,33	287,72	328,229126
2667	293,38	78,60	7,460	283,5218	169,91	300,04	286,47	327,154022
2668	292,43	78,99	7,364	283,9393	169,59	294,81	286,24	326,416595
2669	289,56	79,02	7,364	284,6308	169,38	334,77	285,70	326,294434
2670	288,86	78,61	7,266	285,3948	169,21	271,67	285,78	326,260681
2671	287,90	78,52	7,267	285,9959	168,85	284,04	285,97	325,385437
2672	288,88	78,55	7,171	287,0762	168,43	294,03	285,99	325,012695
2673	286,93	78,67	7,072	287,7535	168,15	243,32	286,60	323,785797
2674	285,10	78,94	7,074	289,3780	168,11	278,35	284,80	323,261169
2675	286,68	78,83	6,955	290,0505	167,83	297,76	283,59	322,085724
2676	288,88	78,97	6,863	291,5447	167,67	295,56	283,29	321,892059
2677	292,32	78,69	6,860	291,7995	167,56	292,30	284,86	321,963776
2678	294,47	78,65	6,762	292,3044	167,50	258,07	286,46	322,241425
2679	295,80	78,68	6,693	291,3242	167,27	277,34	288,11	322,458527
2680	298,70	78,64	6,569	290,4629	167,09	286,09	292,61	323,42627
2681	301,22	78,64	6,567	290,0933	166,90	258,05	297,56	324,387726
2682	303,27	78,45	6,567	289,0909	166,82	294,46	302,73	325,066559
2683	305,60	78,61	6,471	288,1080	167,08	305,35	308,25	326,634033
2684	306,74	78,33	6,374	287,2028	167,17	299,97	312,72	328,138336
2685	307,75	78,56	6,276	287,0162	167,41	286,72	316,63	329,907776
2686	308,60	78,65	6,274	286,9628	167,73	289,16	320,27	331,668182
2687	309,02	78,69	6,276	286,1389	168,07	242,48	322,87	333,219208
2688	308,45	78,56	6,159	286,1443	168,39	257,06	324,19	334,970734
2689	308,22	78,50	6,062	286,4018	168,88	269,03	325,44	335,850098
2690	306,98	78,75	6,063	286,1036	169,47	251,28	325,35	336,606506
2691	306,34	78,63	5,963	285,8683	169,84	262,91	325,84	337,201691
2692	306,36	78,59	5,865	286,0868	170,52	262,77	327,22	338,431335
2693	305,79	78,58	5,866	286,2590	170,84	271,41	327,09	339,297363
2694	305,39	78,65	5,770	286,4185	171,23	247,65	327,98	340,319336
2695	303,54	78,60	5,672	286,9629	171,83	246,57	327,49	341,299866
2696	301,28	78,74	5,673	287,1177	172,20	252,48	327,18	342,145142
2697	300,02	79,06	5,599	287,5540	172,75	208,62	326,03	342,620422
2698	299,92	78,55	5,575	288,1960	173,11	256,66	325,92	343,026764
2699	299,06	78,84	5,479	288,4102	173,84	258,91	325,06	342,923462
2700	299,33	79,04	5,362	289,2466	174,45	255,63	324,22	343,417694
2701	298,74	78,95	5,360	289,6164	174,92	273,12	323,74	343,364929
2702	299,12	79,21	5,263	290,1829	175,52	222,03	324,09	342,937012
2703	299,23	79,25	5,264	290,3195	176,13	260,55	324,21	342,793213
2704	300,35	78,86	5,167	291,2932	176,55	249,04	324,36	343,353241
2705	301,01	78,80	5,068	291,6281	176,94	243,89	324,38	343,772217
2706	301,49	78,81	5,068	292,2265	177,28	250,30	325,25	344,624664
2707	302,46	78,72	4,972	292,6508	177,78	259,77	325,38	344,928406
2708	302,96	78,74	4,875	292,6923	178,22	264,91	324,39	346,303009
2709	305,53	78,60	4,875	293,4369	178,66	274,80	326,03	347,995239
2710	306,63	78,42	4,776	293,8018	178,81	281,28	325,88	349,702759
2711	306,85	78,54	4,681	294,7849	179,13	261,60	325,52	351,868652
2712	307,78	78,60	4,680	294,7860	179,41	294,58	326,50	354,044312
2713	308,26	78,66	4,564	295,5042	179,60	260,11	328,73	356,468811
2714	310,05	78,43	4,563	295,9132	179,70	303,96	331,72	358,583405
2715	311,40	78,91	4,467	296,4372	180,00	271,39	334,15	360,230133
2716	314,09	78,84	4,369	296,3174	180,29	223,55	337,65	361,987885
2717	317,79	78,92	4,333	297,1317	180,37	224,74	340,06	363,31723
2718	321,29	78,65	4,271	297,5824	180,69	233,43	342,99	365,225983
2719	327,95	78,72	4,174	298,1590	181,01	244,72	348,09	367,095032
2720	331,46	78,67	4,079	297,6635	181,43	221,40	353,57	368,515686
2721	329,00	78,65	3,980	298,1746	181,82	247,06	357,29	369,932922
2722	327,22	78,54	3,980	298,4243	182,11	229,51	362,83	371,001709
2723	327,60	78,55	3,980	299,2404	182,53	228,88	368,01	370,702301
2724	325,30	78,66	3,883	299,2375	183,29	230,21	368,14	369,669067
2725	320,16	78,78	3,767	298,8843	183,84	237,22	364,84	367,924713
2726	317,15	78,84	3,766	300,0335	184,31	247,41	360,10	366,376801
2727	314,13	78,70	3,669	300,5577	185,16	250,03	356,52	365,183777
2728	312,85	78,75	3,669	300,9673	185,33	243,72	354,34	363,658722
2729	311,73	78,87	3,572	301,0175	185,70	219,36	353,09	362,096649
2730	310,36	78,55	3,572	301,6168	185,86	251,19	350,71	360,941772
2731	304,25	78,61	3,571	301,8837	186,00	265,36	343,59	359,270142
2732	297,46	78,53	3,474	302,1085	185,79	220,73	334,10	357,420654
2733	289,31	78,40	3,474	302,6163	185,83	232,52	323,71	355,934296
2734	280,38	78,91	3,474	302,4384	185,88	219,80	312,02	353,618256
2735	274,03	78,80	3,378	304,2867	185,68	227,94	302,72	352,501526

2736	268,60	78,97	3,280	303,8339	185,16	231,57	293,52	350,433075
2737	263,43	78,86	3,378	303,6167	184,79	245,82	285,82	348,746033
2738	259,21	79,14	3,377	304,3773	184,35	239,17	277,77	346,431854
2739	255,68	78,95	3,280	304,0317	183,91	218,39	271,37	344,798798
2740	251,42	78,94	3,280	305,0735	183,50	247,44	264,68	343,39566
2741	248,18	79,00	3,280	305,7167	183,10	244,91	258,92	341,941895
2742	245,05	79,09	3,280	306,1411	182,85	253,79	253,67	340,79422
2743	241,44	78,98	3,182	306,0466	182,56	261,48	248,64	338,783936
2744	239,07	79,03	3,066	307,1414	182,26	248,99	244,16	337,734711
2745	236,89	79,02	3,182	308,0375	182,05	247,74	240,13	336,495331
2746	234,57	78,74	3,165	309,4063	181,86	221,38	236,65	334,888855
2747	232,95	78,82	3,065	309,8174	181,61	239,37	233,72	333,339111
2748	230,81	79,53	3,065	309,6147	181,15	228,96	230,96	332,482971
2749	228,80	78,91	3,065	309,9161	180,95	237,70	227,91	331,225708
2750	227,15	78,77	3,066	310,0832	180,70	226,01	225,33	328,776489
2751	225,70	77,54	2,971	309,9878	180,77	230,82	223,11	328,303711
2752	224,30	77,60	2,968	311,4778	180,29	233,41	220,46	327,755676
2753	223,28	77,83	2,968	311,1897	180,00	226,67	218,76	327,276337
2754	222,10	77,98	2,967	312,9384	179,93	214,76	217,20	326,689972
2755	221,15	78,07	2,968	312,6803	179,94	228,67	215,56	326,170441
2756	220,21	77,87	2,967	311,4794	179,77	229,27	214,20	325,373718
2757	218,59	78,23	2,958	313,4644	179,88	228,63	212,91	324,667664
2758	216,98	78,14	2,870	313,0135	179,77	244,27	211,47	323,936798
2759	214,40	78,15	2,870	312,5966	179,79	239,06	210,02	323,27887
2760	212,88	78,19	2,871	312,0474	179,74	216,89	208,32	322,619476
2761	211,81	78,06	2,773	312,3527	179,61	264,28	207,20	322,165039
2762	210,48	77,98	2,772	312,9570	179,54	231,92	205,38	321,181458
2763	209,37	78,06	2,773	313,5100	179,37	269,78	204,23	320,71579
2764	208,64	77,79	2,772	314,0788	179,20	282,91	202,61	320,20752
2765	208,17	78,14	2,676	313,2933	179,26	260,44	201,91	319,650909
2766	207,78	78,26	2,675	313,7771	178,97	239,10	201,08	318,755249
2767	208,06	78,05	2,773	313,5537	178,89	248,45	200,71	318,395447
2768	207,66	78,40	2,700	314,3783	178,79	262,17	200,21	317,464233
2769	207,01	78,19	2,675	315,1081	178,71	265,26	199,38	317,042877
2770	205,97	78,17	2,578	314,2627	178,62	263,60	198,78	316,686127
2771	205,37	77,81	2,675	313,9361	178,45	264,83	198,25	315,945129
2772	204,50	77,80	2,676	314,3408	178,24	260,92	197,24	315,243286
2773	204,30	78,09	2,676	315,5004	178,23	225,53	196,82	314,809143
2774	203,24	78,12	2,676	314,8141	178,26	245,35	196,26	314,360901
2775	202,69	78,02	2,676	315,9309	178,22	228,72	195,54	314,063416
2776	202,17	78,06	2,578	315,9706	178,19	273,93	194,73	313,600983
2777	201,29	77,97	2,578	316,2843	178,23	259,41	194,13	313,03067
2778	200,42	78,01	2,578	317,5996	178,13	244,69	193,60	312,824951
2779	199,39	77,63	2,555	315,1860	178,16	218,82	192,62	312,091461
2780	198,96	77,88	2,482	316,3275	177,86	236,62	191,82	311,901245
2781	198,58	77,53	2,481	316,9393	177,83	234,88	191,58	310,606537
2782	198,07	77,71	2,480	316,4398	177,55	259,26	191,25	310,816498
2783	197,48	77,40	2,481	316,9425	177,52	265,17	190,57	310,286621
2784	196,82	77,47	2,480	316,4747	177,09	243,35	189,61	309,906189
2785	196,06	77,37	2,480	316,9150	177,23	271,34	189,86	309,430145
2786	195,55	77,41	2,383	317,6278	177,03	270,60	189,72	309,113647
2787	194,77	77,62	2,383	317,6800	177,02	277,60	189,43	309,025879
2788	193,87	77,63	2,383	317,5891	176,84	268,26	189,16	308,528564
2789	193,12	77,71	2,368	318,1773	176,80	301,87	188,84	308,510193
2790	192,58	77,49	2,267	318,1899	176,59	262,52	188,50	308,298035
2791	192,15	77,50	2,267	318,4947	176,64	282,41	187,83	308,065613
2792	191,96	77,57	2,266	318,0349	176,53	272,46	187,51	307,654999
2793	191,58	77,63	2,267	318,2115	176,59	263,48	186,96	306,980133
2794	191,36	77,78	2,267	317,9444	176,56	260,98	186,34	306,762787
2795	191,03	77,86	2,267	318,1902	176,40	270,49	186,24	306,951111
2796	191,15	77,76	2,170	318,5089	176,33	307,97	185,69	306,313324
2797	190,92	78,00	2,266	318,0916	176,29	246,01	185,01	306,483734
2798	190,94	77,93	2,169	320,3722	176,08	251,33	184,68	306,434204
2799	191,54	78,10	2,266	318,7025	176,13	260,32	184,75	306,06369
2800	191,08	77,98	2,170	318,0817	176,10	259,06	184,44	305,667084
2801	190,94	77,87	2,170	317,8126	176,17	287,36	183,98	305,150055
2802	190,58	78,02	2,170	317,6006	176,14	278,55	183,55	304,787323
2803	190,08	78,05	2,170	317,0540	176,18	269,39	183,23	304,165283
2804	190,44	78,18	2,073	317,1062	176,27	278,57	183,26	304,123901
2805	191,23	78,33	2,073	316,4705	176,18	284,92	183,59	303,221558
2806	191,19	78,29	2,072	315,7969	176,32	259,74	183,79	302,829407
2807	190,45	78,80	2,072	316,0340	176,18	242,02	183,39	303,545868
2808	190,04	78,32	1,975	315,8287	176,16	272,81	183,54	302,803589
2809	189,91	78,41	2,072	314,6388	176,19	274,04	183,25	302,459229
2810	189,61	78,05	1,976	314,7429	176,32	278,43	183,29	302,344513
2811	189,09	78,00	1,976	313,0490	176,53	283,11	182,84	302,064697

2812	188,54	78,08	2,072	313,1157	176,67	269,66	182,43	302,229248
2813	188,17	77,99	1,976	312,8996	176,55	304,65	182,23	301,800385
2814	187,49	78,18	1,975	312,6075	176,56	277,48	181,77	301,797516
2815	187,23	78,37	1,878	311,2380	176,76	267,31	181,33	302,051697
2816	187,29	78,10	1,975	309,9586	176,93	277,23	181,14	301,413239
2817	186,71	77,99	1,975	309,4250	176,94	281,09	180,90	301,434875
2818	186,17	78,30	1,878	308,8458	177,18	267,87	180,68	300,94339
2819	185,87	78,13	1,975	308,5815	177,03	284,41	180,18	300,67038
2820	185,58	78,06	1,878	307,4197	177,14	285,11	180,07	300,573059
2821	185,17	78,17	1,878	306,9504	177,19	311,52	179,74	300,613251
2822	185,18	78,04	1,878	306,0607	177,32	292,55	179,33	299,995789
2823	184,97	78,31	1,878	305,2219	177,37	287,42	179,31	299,554321
2824	184,86	78,12	1,878	305,5125	177,59	272,17	178,78	299,876099
2825	184,66	78,38	1,780	303,8254	177,77	281,06	178,76	298,679779
2826	184,72	77,95	1,780	303,6366	177,62	266,16	178,66	298,135834
2827	184,70	77,90	1,781	302,9516	177,45	270,87	178,77	297,990906
2828	184,39	77,98	1,780	301,8532	177,80	323,24	178,30	297,700806
2829	184,39	77,98	1,780	302,6531	177,63	285,38	178,24	296,94812
2830	184,16	77,86	1,780	301,0378	177,78	295,05	177,79	296,439453
2831	183,89	77,81	1,781	301,3000	177,73	305,62	177,95	296,214264
2832	183,52	77,65	1,780	300,0105	177,57	331,32	177,36	295,988861
2833	182,80	77,88	1,780	300,0744	177,27	268,15	177,17	296,289764
2834	182,34	77,87	1,781	298,6362	177,36	308,83	177,02	296,065277
2835	182,06	77,93	1,697	298,4932	177,40	330,22	176,50	296,15155
2836	181,49	77,91	1,683	298,2332	177,37	281,04	176,20	296,082428
2837	180,87	77,83	1,683	297,2101	177,46	279,62	175,90	295,914276
2838	180,13	78,02	1,683	296,8727	177,43	263,11	175,20	295,77774
2839	179,70	78,26	1,683	297,3710	177,39	325,69	174,75	295,750763
2840	179,27	78,41	1,586	296,2123	177,45	299,99	174,36	295,650116
2841	178,74	77,80	1,684	296,2291	177,43	258,57	174,14	295,072449
2842	178,51	78,05	1,683	295,9078	177,45	270,60	173,51	295,118774
2843	177,94	78,25	1,586	294,5302	177,45	329,53	173,26	294,706482
2844	177,47	78,30	1,586	294,8754	177,53	325,52	173,18	294,078369
2845	177,34	78,12	1,586	294,5767	177,29	328,20	172,99	293,965393
2846	177,12	77,88	1,586	296,3117	177,29	324,67	172,39	293,502167
2847	176,73	78,34	1,586	294,3063	177,37	331,38	172,33	292,490936
2848	176,68	78,11	1,586	294,3608	177,28	330,32	172,06	292,960052
2849	176,22	78,22	1,469	293,9573	177,27	331,54	171,75	291,687592
2850	175,92	78,15	1,469	293,9172	176,95	330,24	170,79	291,490387
2851	175,24	78,19	1,469	293,4077	176,95	329,11	170,12	291,005554
2852	174,76	78,21	1,470	293,6387	176,86	299,86	169,48	290,225433
2853	174,37	78,22	1,469	292,7642	176,88	327,29	168,95	289,394012
2854	174,12	78,30	1,373	293,3250	176,73	328,00	168,53	288,857697
2855	173,92	78,03	1,373	292,8826	176,61	327,62	168,23	287,747101
2856	173,32	78,21	1,374	293,6920	176,47	288,45	167,64	287,116058
2857	172,97	78,02	1,372	292,9172	176,32	327,39	167,48	286,191864
2858	172,74	78,14	1,372	293,0337	176,18	326,91	167,11	285,316925
2859	172,86	78,16	1,372	292,1720	176,09	326,59	166,87	284,269287
2860	172,40	78,47	1,372	292,8139	175,96	326,87	166,71	283,761047
2861	172,20	78,54	1,291	291,6663	175,63	326,14	166,40	282,551239
2862	171,71	78,33	1,372	292,4568	175,57	326,41	166,33	281,675903
2863	172,02	78,14	1,290	292,8511	175,35	326,52	166,13	280,881226
2864	171,87	78,42	1,372	291,9765	175,19	283,88	166,32	279,586548
2865	170,98	77,96	1,372	293,0724	175,17	326,57	165,84	278,646454
2866	170,14	78,32	1,372	291,4960	174,86	325,92	165,78	277,671204
2867	169,83	78,56	1,281	291,1715	174,64	326,01	165,28	277,221313
2868	169,25	78,54	1,275	292,5300	174,68	326,11	164,95	276,565094
2869	169,24	78,40	1,276	292,1639	174,66	326,18	164,64	275,739838
2870	168,91	79,11	1,275	292,6466	174,36	327,06	164,05	275,378845
2871	168,54	78,65	1,275	292,3578	174,62	327,82	163,91	273,860443
2872	168,66	78,30	1,275	292,6660	174,54	328,49	163,72	273,253937
2873	168,54	78,81	1,178	292,1370	174,73	329,15	163,53	271,947876
2874	168,03	78,35	1,178	292,6737	174,49	329,18	163,37	271,357758
2875	167,74	78,47	1,275	291,1891	174,59	327,96	163,07	270,674896
2876	167,90	78,57	1,178	291,6154	174,68	328,23	162,83	269,979401
2877	167,69	78,21	1,275	291,2755	174,68	328,12	162,50	269,340881
2878	167,66	78,52	1,178	290,7310	174,67	327,37	162,50	269,024231
2879	167,54	78,13	1,178	290,3019	174,76	326,71	162,50	268,11499
2880	167,78	78,28	1,177	290,1130	174,87	316,52	162,38	268,163147
2881	167,64	78,51	1,177	288,3800	175,36	326,89	162,42	267,127411
2882	167,83	78,10	1,177	287,6391	175,53	325,94	162,33	266,847046
2883	168,13	78,25	1,080	287,0553	175,88	325,24	162,76	266,693085
2884	168,52	78,22	1,080	285,9753	176,17	324,45	162,88	266,600922
2885	168,52	78,01	1,081	285,1893	176,64	323,93	162,75	266,414307
2886	168,74	78,14	1,080	283,4980	177,24	324,10	163,01	266,003967
2887	169,00	78,02	1,080	283,2411	177,79	324,21	163,27	265,933838

2888	168,99	78,23	1,080	283,2808	178,41	324,48	163,27	265,813385
2889	169,60	78,54	0,983	282,3063	179,29	325,90	163,67	264,71521
2890	169,76	78,41	1,081	281,5692	179,93	324,87	163,58	264,865387
2891	169,66	78,09	0,983	281,1843	180,64	325,76	163,83	264,436127
2892	169,69	78,27	1,079	279,6746	181,61	326,52	164,21	263,667664
2893	169,48	78,32	0,983	279,1373	182,33	327,31	164,67	263,346558
2894	169,33	78,32	0,982	277,6398	183,02	327,54	164,67	263,203003
2895	169,16	78,34	0,983	278,3585	183,24	326,92	164,76	263,321808
2896	168,82	78,43	0,983	277,2028	184,11	327,60	164,60	263,006775
2897	168,57	78,18	0,982	275,1006	184,43	326,08	164,69	263,264282
2898	168,49	78,36	0,885	275,4384	184,84	326,10	164,53	263,053711
2899	168,55	78,61	0,885	273,7956	185,67	327,00	164,34	262,321228
2900	168,49	78,25	0,886	274,3760	185,77	326,65	164,19	262,846283
2901	168,30	78,08	0,885	273,6384	186,00	325,87	164,13	262,833313
2902	168,15	78,34	0,885	272,2079	186,36	325,33	163,99	262,487396
2903	168,13	78,08	0,885	272,4253	186,73	305,97	163,86	262,597656
2904	167,98	78,24	0,885	271,2569	186,74	325,59	163,60	262,178253
2905	167,91	78,22	0,885	269,5024	186,92	324,26	163,40	262,817322
2906	167,73	78,02	0,886	269,4863	187,33	296,40	163,36	262,249451
2907	167,72	78,20	0,788	268,7126	187,50	309,29	163,36	262,063385
2908	168,04	77,90	0,788	268,6377	187,92	278,08	163,28	261,836456
2909	168,16	78,07	0,788	266,9396	188,13	326,61	163,17	261,502441
2910	167,93	77,84	0,788	266,0186	188,28	326,72	163,19	261,397278
2911	167,99	77,91	0,788	264,4553	188,39	319,12	163,44	261,166504
2912	168,11	77,91	0,788	264,0938	188,32	326,01	163,23	261,272522
2913	168,35	77,86	0,788	264,1224	188,29	325,35	163,24	261,501678
2914	168,15	77,95	0,691	263,0794	188,60	324,18	163,24	261,557526
2915	168,09	77,65	0,788	264,1040	188,86	290,37	163,11	261,899384
2916	167,92	77,75	0,671	263,0203	189,03	324,77	163,23	261,745575
2917	167,47	77,60	0,675	262,6834	189,13	282,91	163,27	261,970978
2918	167,14	77,51	0,788	263,2231	189,20	323,31	162,96	262,324738
2919	166,83	77,95	0,671	262,1076	189,46	323,28	162,96	262,123444
2920	166,79	77,86	0,671	261,3928	189,59	322,88	163,03	262,250549
2921	166,47	77,75	0,574	261,6556	189,87	322,72	162,89	262,244873
2922	166,51	77,72	0,575	260,7224	189,77	321,79	162,94	262,210327
2923	166,21	78,17	0,671	260,6911	190,09	321,64	162,92	262,184448
2924	166,27	77,77	0,574	260,1825	190,15	321,45	163,19	261,814575
2925	166,31	78,22	0,574	260,6447	190,35	321,14	162,71	262,278198
2926	166,38	78,08	0,574	259,6188	190,84	321,07	162,94	261,849884
2927	166,32	78,19	0,574	260,3212	190,82	320,69	162,88	262,305511
2928	166,65	78,20	0,574	258,7820	190,86	320,79	163,00	262,184082
2929	166,91	78,27	0,574	258,7595	191,30	320,75	163,08	262,327393
2930	166,79	77,68	0,574	259,5428	191,42	320,28	163,03	262,569397
2931	166,71	78,05	0,574	258,9059	191,65	288,98	163,23	262,245148
2932	166,88	77,88	0,477	259,0572	191,75	319,58	163,00	262,330048
2933	166,93	78,28	0,536	259,1857	191,90	319,94	163,18	262,479828
2934	166,96	78,14	0,476	260,1568	192,28	320,59	163,26	262,365448
2935	167,20	78,05	0,477	259,4747	192,52	319,72	163,37	262,366455
2936	167,01	77,84	0,476	259,3157	192,72	319,60	163,55	262,605408
2937	167,04	78,25	0,379	258,9193	193,04	305,87	163,62	262,417786
2938	166,54	77,89	0,379	258,6755	193,21	318,57	163,33	262,689087
2939	166,57	77,82	0,380	258,7343	193,60	318,78	163,22	262,523743
2940	166,48	77,92	0,380	259,2996	193,96	319,02	163,09	262,539673
2941	166,32	78,08	0,379	259,0869	194,03	319,38	163,17	262,160553
2942	166,45	78,12	0,380	258,9160	194,29	318,96	162,83	262,129822
2943	166,20	78,04	0,379	258,7440	194,69	319,11	163,07	262,158783
2944	166,37	77,81	0,379	258,7379	195,06	319,31	163,15	261,928894
2945	166,13	78,31	0,379	259,6205	195,21	319,39	162,96	261,9823
2946	165,87	78,20	0,379	258,9133	195,37	320,03	162,32	261,594971
2947	165,34	78,19	0,282	258,6056	195,73	319,70	161,98	261,194122
2948	164,79	77,92	0,282	258,7199	195,99	319,82	161,24	260,547638
2949	164,77	78,10	0,282	258,6751	195,98	320,75	160,52	260,073547
2950	164,51	78,29	0,282	259,0371	195,97	320,93	160,37	259,706848
2951	164,43	78,28	0,282	259,3763	195,87	320,63	160,18	259,316681
2952	164,30	78,26	0,282	259,0634	195,77	320,75	160,15	258,827301
2953	163,72	78,06	0,282	260,3987	195,32	320,48	159,89	259,26059
2954	163,89	78,05	0,282	260,6277	194,97	320,52	159,64	259,062836
2955	163,50	77,99	0,184	260,2135	194,70	320,03	159,25	258,844879
2956	163,44	78,02	0,185	260,9602	194,27	320,51	159,13	258,803223
2957	163,56	78,31	0,282	260,6750	193,86	320,33	159,07	258,417267
2958	163,49	77,77	0,184	260,2825	193,44	320,25	159,11	258,223022
2959	163,47	78,25	0,184	261,3983	192,83	320,34	158,92	258,25
2960	162,63	78,37	0,185	261,4549	192,46	320,22	159,26	257,99823
2961	162,41	77,97	0,185	262,1559	191,99	320,11	159,00	257,662292
2962	162,12	78,47	0,185	262,7432	191,37	319,77	158,79	257,458313
2963	162,35	78,42	0,088	261,5682	191,17	319,95	158,71	256,81839

2964	162,06	77,95	0,185	262,0583	190,68	320,66	158,57	256,778107
2965	212,70	72,32	6,962	72,0754	72,28	72,74	106,39	73,7760696
2966	408,54	72,37	6,866	72,5512	73,14	72,72	178,47	78,0199127
2967	544,71	72,49	6,572	73,5100	74,65	72,67	267,32	84,8893509
2968	733,51	72,62	6,163	75,1769	77,00	72,73	376,85	95,8133087
2969	819,73	73,10	5,774	77,7804	80,97	72,95	489,31	110,022362
2970	840,48	73,43	5,275	81,6068	87,31	73,18	579,81	124,698898
2971	859,12	73,56	4,882	86,6364	95,94	73,91	649,31	139,035995
2972	878,30	73,92	4,375	92,8251	105,16	74,48	699,53	153,001282
2973	852,64	74,01	4,085	100,4294	114,27	76,16	742,66	166,942841
2974	772,46	74,14	3,775	109,6840	123,18	79,26	752,28	181,779037
2975	761,44	74,21	3,580	120,8535	132,87	83,12	762,23	196,445709
2976	751,34	74,41	3,287	132,5316	143,17	88,69	775,41	211,864761
2977	711,53	74,20	3,074	144,2917	153,88	95,33	764,28	226,894531
2978	677,02	74,45	2,880	157,1812	165,61	100,48	744,86	240,344803
2979	670,20	74,34	2,685	169,7638	177,43	106,76	729,05	253,338242
2980	668,92	74,38	2,588	181,6080	189,41	115,03	717,29	265,908173
2981	495,63	74,59	18,241	194,7738	200,01	100,27	683,07	284,245789
2982	600,38	74,48	17,549	205,0342	210,02	126,12	679,68	291,297668
2983	638,32	74,60	17,357	214,5256	217,92	132,34	694,71	297,047363
2984	714,25	74,62	17,040	222,7764	224,45	143,79	728,74	301,111053
2985	785,28	74,90	16,751	229,3463	230,36	149,82	770,74	305,386169
2986	817,00	75,14	16,560	235,5876	235,75	157,08	813,52	309,699982
2987	889,00	75,48	16,150	240,6101	240,93	158,76	862,72	315,65799
2988	957,54	75,02	15,763	241,4628	215,20	156,21	827,58	321,774872
2989	971,94	75,31	15,349	244,3359	202,26	181,41	830,09	327,367798
2990	978,57	75,87	14,961	247,7523	192,86	184,02	826,31	332,583954
2991	976,17	75,24	14,558	250,8164	186,39	191,71	831,49	336,609344
2992	959,23	74,99	14,164	254,1933	182,26	196,97	826,76	340,990448
2993	929,02	75,96	13,854	257,4287	179,06	200,45	820,22	346,329834
2994	896,69	75,83	13,479	261,1803	177,40	204,87	811,89	353,237915
2995	877,18	75,46	13,118	265,1081	175,78	212,03	802,01	360,823517
2996	861,92	75,36	12,764	269,1930	174,78	215,02	793,96	368,4534
2997	844,18	75,70	12,471	273,0411	173,61	220,22	781,75	375,902527
2998	827,89	76,13	12,160	277,4890	172,93	224,03	769,33	382,877197
2999	823,51	75,97	11,871	281,9609	172,28	216,02	760,83	389,053223
3000	827,08	75,54	11,560	286,6668	171,52	237,48	754,56	394,421417
3001	819,38	76,07	11,265	290,6357	171,15	242,90	747,12	398,962555
3002	802,80	76,50	10,973	295,0270	170,90	248,83	735,70	404,055084
3003	788,84	75,94	10,763	298,3982	170,50	254,29	723,07	407,759735
3004	766,38	75,90	10,469	302,6834	169,95	253,12	703,30	412,357513
3005	749,33	75,91	10,176	306,5519	169,54	265,99	682,44	415,78186
3006	737,73	75,77	9,961	310,0717	169,17	260,87	664,75	419,023987
3007	728,07	76,11	9,767	313,2556	169,01	278,50	649,15	422,284607
3008	726,59	75,85	9,524	316,7383	168,82	279,05	637,56	425,59021
3009	724,26	75,74	9,261	320,0456	169,07	291,40	629,38	428,638977
3010	716,09	76,07	9,067	322,5036	169,24	268,93	618,24	430,954956
3011	698,57	75,82	8,873	325,8408	169,56	305,07	602,99	434,424774
3012	691,58	75,86	8,679	327,9343	170,14	312,28	587,42	436,798615
3013	688,88	75,82	8,464	331,9263	170,28	309,14	576,68	439,849762
3014	655,21	76,24	8,369	333,7239	170,79	327,87	557,61	441,644989
3015	633,12	75,68	8,170	336,3504	171,89	335,56	537,04	443,579498
3016	617,42	76,48	8,073	338,6241	173,10	343,41	517,11	444,535645
3017	608,53	76,19	7,878	341,5721	174,14	335,16	500,85	444,020935
3018	591,10	75,91	7,665	342,0160	174,94	356,57	484,31	443,341187
3019	569,25	75,66	7,568	343,6469	176,52	366,24	466,91	442,074707
3020	558,98	75,98	7,471	345,2520	177,91	373,91	450,39	440,151733
3021	549,29	75,92	7,373	345,4907	179,50	379,02	435,75	438,997223
3022	545,77	75,74	7,274	346,8458	180,65	387,61	422,59	437,46637
3023	545,44	75,85	7,082	346,9518	181,41	394,42	414,56	436,002319
3024	540,70	75,82	6,964	346,7573	181,80	400,51	406,66	434,429047
3025	548,55	75,70	6,866	347,8112	182,03	406,46	401,88	433,495667
3026	567,65	75,80	6,671	347,6846	182,05	411,51	403,29	432,313324
3027	592,18	75,72	6,478	348,2137	182,81	413,51	410,76	432,236908
3028	614,47	75,66	6,281	348,7201	183,86	420,96	423,81	433,288177
3029	627,94	75,71	6,166	350,0583	184,92	425,54	438,48	434,120911
3030	630,48	75,70	5,970	350,4877	186,62	429,72	447,96	435,04895
3031	631,42	75,87	5,776	351,9477	188,25	434,00	458,85	436,756683
3032	632,91	75,59	5,582	353,1516	190,09	438,48	468,59	438,485626
3033	636,45	75,94	5,486	353,8236	192,41	442,68	475,17	440,596497
3034	645,61	76,06	5,271	354,6777	195,02	440,02	485,38	442,901733
3035	654,44	76,16	5,074	357,0016	197,82	450,97	496,03	445,5896
3036	665,04	76,52	4,977	358,3171	200,81	427,64	509,03	448,21347
3037	671,31	76,18	4,784	359,9310	204,27	460,12	521,52	451,048859
3038	675,42	76,12	4,571	362,6816	207,36	464,42	528,87	455,239929
3039	682,37	75,89	4,376	364,9926	211,96	468,85	535,53	459,462738

3040	693,44	76,27	4,180	367,7464	216,27	472,46	549,28	463,717926
3041	708,02	76,10	3,986	369,6098	221,83	476,70	565,51	468,00531
3042	710,14	76,10	3,772	372,7125	227,91	481,19	573,27	472,060577
3043	703,45	76,15	3,589	375,9613	234,10	485,79	577,59	475,951935
3044	695,13	76,89	3,384	389,5190	276,72	491,68	643,10	484,441803
3045	690,01	76,83	3,285	395,7901	304,85	497,59	662,42	490,730255
3046	680,93	76,93	3,189	403,4597	329,72	503,28	676,79	497,25238
3047	673,15	76,77	2,975	410,2391	351,42	508,86	686,99	503,680084
3048	669,55	77,15	2,878	415,4998	370,74	454,42	691,75	509,617554
3049	667,93	76,72	2,779	421,9712	388,76	517,12	695,18	515,851074
3050	666,67	77,29	2,682	426,5024	405,19	492,51	698,01	521,150452
3051	663,49	77,39	2,586	432,5827	419,85	472,99	700,07	526,137329
3052	660,03	77,01	2,391	437,1350	433,41	472,06	700,90	530,777161
3053	644,11	77,19	2,274	441,8736	446,82	456,98	700,10	535,009216
3054	622,05	77,09	2,177	446,9625	459,06	455,13	691,34	538,671692
3055	608,00	77,18	2,080	452,5090	470,72	419,69	680,38	541,513733
3056	597,12	77,26	2,079	457,9194	481,13	487,34	670,30	542,489624
3057	585,18	76,94	-0,002	461,8045	491,80	445,30	658,54	543,348938
3058	484,30	77,16	18,243	473,3149	504,36	512,64	626,88	548,050842
3059	877,83	77,22	17,745	477,5925	512,74	566,51	699,92	542,676636
3060	785,39	78,04	17,355	480,6077	514,65	571,12	760,10	538,332886
3061	749,54	78,07	16,947	482,3719	516,64	573,71	797,93	533,889465
3062	743,06	77,94	16,655	483,6801	516,20	575,98	828,24	530,4776
3063	710,65	77,67	16,359	484,1792	515,51	577,10	851,07	527,803345
3064	694,38	77,91	16,053	483,9927	512,39	578,79	865,98	524,831665
3065	688,67	77,70	15,760	484,7306	508,96	579,54	877,09	521,059509
3066	687,85	78,17	15,450	484,5461	505,10	580,54	886,94	518,178345
3067	673,91	77,92	15,255	483,6420	501,16	581,04	891,70	514,701233
3068	648,29	77,46	14,959	481,6595	496,31	580,95	887,78	512,600281
3069	633,95	77,37	14,750	478,8771	491,61	580,31	885,62	510,297882
3070	624,81	77,83	14,550	477,2944	486,77	579,99	882,62	508,402222
3071	619,68	77,90	14,317	474,6888	481,44	578,70	878,63	506,434814
3072	612,68	77,89	14,167	472,9618	476,48	577,64	875,06	504,742737
3073	573,66	77,70	13,950	470,2856	471,54	576,16	866,81	503,207062
3074	549,35	77,57	13,753	468,9959	466,97	575,87	853,05	501,137634
3075	532,11	78,35	13,563	466,9778	462,52	574,74	840,35	498,849854
3076	519,59	78,27	13,465	464,6472	457,96	573,37	825,57	496,660004
3077	512,63	78,08	13,269	461,7457	453,86	571,50	813,57	494,533813
3078	508,41	78,15	13,152	459,4499	449,62	570,00	804,66	492,671814
3079	505,08	78,13	12,956	457,4966	444,97	568,54	796,50	491,027435
3080	502,58	78,11	12,763	454,8264	441,25	566,38	789,46	489,00061
3081	499,90	77,47	12,668	452,4542	437,39	564,48	784,16	487,301178
3082	498,74	78,04	12,570	449,9962	433,01	562,19	780,41	485,696777
3083	496,82	77,71	12,356	448,1144	429,48	560,25	777,32	483,943207
3084	496,92	78,09	12,255	445,4495	425,27	558,24	776,94	482,691833
3085	495,19	77,72	12,061	443,8847	422,33	556,49	775,01	480,642578
3086	492,74	77,81	11,963	440,9882	418,55	553,90	772,97	479,652344
3087	492,85	77,80	11,772	438,5692	414,98	551,36	771,11	478,800385
3088	493,05	77,92	11,675	437,0615	411,27	549,09	769,45	478,010742
3089	491,25	77,91	11,460	434,0290	407,98	546,87	769,98	477,685242
3090	491,79	77,88	11,359	433,0412	405,06	544,79	769,27	476,948151
3091	491,64	77,77	11,169	431,9166	401,99	542,69	770,36	476,326355
3092	491,35	78,14	11,071	430,1584	399,28	540,18	770,87	476,02124
3093	490,34	78,28	10,854	428,9749	396,41	538,14	770,93	476,161499
3094	491,13	77,99	10,759	427,3253	394,83	535,73	772,77	475,858154
3095	492,62	78,09	10,563	426,2780	392,67	533,66	775,93	475,480133
3096	499,20	77,77	10,466	426,0652	390,11	531,89	781,07	475,757721
3097	504,65	77,93	10,274	425,2931	388,39	530,00	788,18	475,316315
3098	507,36	77,91	10,176	424,5209	386,64	528,25	795,81	474,742279
3099	505,55	77,87	9,959	424,3115	384,99	526,43	803,19	474,410492
3100	497,52	78,07	9,864	423,7913	383,29	524,48	807,04	474,308746
3101	488,09	77,94	9,670	422,9543	381,87	522,24	802,34	474,00238
3102	479,25	78,25	9,572	421,7734	380,65	520,50	793,71	473,794647
3103	472,21	78,31	9,472	421,3887	379,40	518,90	784,22	474,080353
3104	464,92	77,49	9,374	420,9891	379,12	516,76	775,91	474,271423
3105	458,46	78,39	9,257	420,5989	378,21	514,72	769,35	474,642975
3106	450,64	78,34	9,159	419,7692	377,00	512,39	759,21	474,752502
3107	443,53	78,00	9,064	419,6306	376,73	510,26	746,83	474,186157
3108	436,14	77,88	8,969	418,9610	375,87	508,27	732,29	473,374481
3109	428,55	78,15	8,871	419,1556	375,34	505,58	720,57	472,268982
3110	423,42	77,49	8,771	418,2962	374,33	503,16	707,33	470,86908
3111	418,22	77,77	8,757	417,7258	374,01	500,23	696,03	469,144989
3112	413,54	77,41	8,676	416,9151	373,44	497,65	684,52	467,271484
3113	410,22	77,93	8,575	416,9578	372,76	495,65	675,71	465,772797
3114	406,22	77,73	8,459	415,5655	371,52	493,64	666,29	464,359894
3115	401,92	78,05	8,459	414,7138	370,71	491,21	658,46	462,698608

3116	400,25	77,77	8,364	413,7175	369,13	489,01	650,35	461,997803
3117	398,35	77,88	8,264	413,2561	368,17	486,55	645,22	460,928619
3118	396,72	77,79	8,168	412,0692	366,96	484,08	639,73	460,154297
3119	395,65	77,95	8,087	410,8871	366,04	481,50	634,61	459,68811
3120	393,31	77,78	7,972	408,0348	364,82	478,45	628,72	459,209686
3121	392,83	77,50	7,972	408,3361	363,99	476,63	624,83	459,032654
3122	390,66	78,10	7,876	407,9133	363,10	474,60	621,52	458,948944
3123	389,44	78,01	7,778	407,6360	362,31	472,35	618,26	458,989929
3124	388,47	78,01	7,661	406,9536	361,08	470,06	614,41	459,154602
3125	389,45	77,53	7,661	406,1610	360,35	467,74	612,02	459,028229
3126	390,40	78,00	7,565	405,1277	359,50	466,10	611,01	458,519745
3127	392,66	77,71	7,467	404,2562	359,23	463,90	612,42	457,695587
3128	396,77	78,20	7,368	403,5699	358,87	461,68	614,98	457,276703
3129	399,09	77,69	7,270	402,2321	358,45	459,72	618,42	457,004333
3130	401,29	78,13	7,175	399,7817	345,35	457,70	603,29	456,98584
3131	397,73	77,73	7,078	393,2061	302,78	454,48	550,19	456,158539
3132	393,41	77,46	7,078	389,6627	280,50	451,61	527,66	454,66095
3133	387,66	77,46	6,959	386,6427	264,39	448,96	505,03	452,434235
3134	382,80	77,48	6,863	383,8396	252,45	445,96	485,49	451,289368
3135	379,34	77,40	6,764	381,8790	243,27	443,39	469,60	449,038696
3136	374,47	77,23	6,666	379,5514	237,54	441,32	454,18	446,161377
3137	369,12	77,58	6,571	377,7469	232,71	439,34	440,84	443,496704
3138	365,92	77,18	6,570	376,0400	227,99	436,74	430,99	440,487061
3139	362,01	77,17	6,473	374,7333	224,26	434,80	421,63	438,327026
3140	357,59	77,39	6,377	373,5934	220,49	433,23	411,47	436,711212
3141	353,32	77,38	6,278	371,8349	216,89	430,99	402,63	435,931122
3142	348,90	77,21	6,279	370,2031	213,76	428,79	395,15	435,046783
3143	344,43	76,83	6,163	369,4023	210,64	427,68	387,37	434,332306
3144	335,71	77,14	6,065	367,5079	207,74	424,90	376,95	433,968658
3145	330,13	77,26	6,065	365,7565	205,36	423,25	367,09	433,424957
3146	323,92	77,23	5,966	363,6000	202,82	421,37	358,33	432,371887
3147	319,21	77,07	5,966	362,0333	200,33	418,74	349,84	431,864868
3148	311,76	77,36	5,868	359,2174	198,41	417,23	341,00	431,092438
3149	302,58	76,89	5,773	357,4500	196,60	415,52	331,18	429,719116
3150	293,28	77,38	5,772	354,1590	194,57	412,54	322,62	427,400085
3151	283,61	76,93	5,674	352,3547	192,72	410,53	312,71	424,73053
3152	274,92	76,78	5,674	349,8548	191,44	409,78	302,73	421,694885
3153	267,73	76,57	5,674	348,2194	189,71	407,45	293,68	418,812653
3154	261,10	76,68	5,575	347,3026	187,97	405,89	285,27	415,524139
3155	254,89	76,64	5,577	343,9003	186,31	403,79	276,69	411,80542
3156	245,33	76,98	5,479	342,4002	184,70	401,85	268,47	408,216125
3157	238,51	76,52	5,478	340,1310	183,23	399,89	260,00	403,695099
3158	233,86	76,75	5,408	338,5594	181,80	397,85	252,53	398,993835
3159	230,39	76,86	5,361	336,9420	180,66	396,45	246,05	393,615265
3160	227,19	76,67	5,362	334,4784	179,07	394,79	240,27	388,472687
3161	224,23	76,62	5,265	332,9628	177,80	392,37	235,10	383,919037
3162	221,58	76,99	5,263	331,1277	176,38	390,74	230,64	378,992432
3163	219,80	76,61	5,167	330,9106	175,02	389,99	226,30	374,514709
3164	217,22	76,74	5,168	329,8904	173,74	388,13	222,79	370,360229
3165	215,25	76,64	5,167	328,8087	172,70	386,49	219,16	366,538391
3166	213,29	76,70	5,071	326,0936	171,59	383,00	216,22	362,478394
3167	210,55	76,58	5,069	326,4059	170,80	383,47	213,00	358,911835
3168	208,13	76,70	4,971	325,3294	169,77	381,89	210,53	355,196503
3169	205,97	76,85	4,971	323,5825	169,03	381,20	207,56	351,557831
3170	204,24	76,79	4,876	322,2299	168,13	379,00	205,07	348,487122
3171	202,42	76,94	4,876	319,9084	167,17	377,67	203,07	344,84729
3172	200,96	76,53	4,875	318,9387	166,32	376,14	201,17	341,462616
3173	199,18	76,75	4,833	320,4568	165,18	376,49	198,56	338,768066
3174	197,83	76,68	4,776	317,4411	164,38	375,30	196,95	335,958252
3175	196,48	76,47	4,776	316,8809	163,53	373,59	195,63	333,495636
3176	195,50	76,93	4,681	316,9438	162,87	349,06	194,13	330,891327
3177	194,56	76,59	4,564	316,7064	161,95	371,61	192,68	328,404053
3178	194,05	76,65	4,564	315,4095	161,48	370,59	191,47	326,014221
3179	193,22	76,39	4,563	314,6502	161,04	370,01	190,47	323,341003
3180	191,96	76,33	4,467	313,0643	160,40	368,70	189,19	321,069855
3181	190,75	76,95	4,465	311,4382	160,02	367,31	187,67	318,581635
3182	189,65	76,75	4,465	311,6205	159,39	367,56	186,53	316,561981
3183	188,81	76,90	4,368	308,9893	158,86	365,80	185,71	314,835571
3184	188,26	76,86	4,270	309,7196	158,28	364,83	184,69	313,369232
3185	187,56	76,65	4,270	307,6189	157,82	364,08	183,69	311,170715
3186	187,15	76,84	4,271	308,0928	157,16	364,23	182,74	309,723511
3187	187,01	76,98	4,173	307,9384	156,70	363,91	182,21	308,362061
3188	187,07	76,74	4,173	306,6087	156,43	363,51	181,87	306,611023
3189	187,09	76,68	4,076	305,5604	155,93	363,30	181,51	305,178558
3190	187,30	76,41	4,008	305,2062	155,44	363,68	180,74	303,949097
3191	187,44	76,53	3,980	305,7021	154,93	363,13	180,08	302,316345

3192	186,55	76,48	3,980	305,6932	154,51	363,06	179,33	301,788422
3193	185,61	76,96	3,882	304,8961	154,17	363,66	178,58	299,726593
3194	185,02	76,93	3,882	304,2012	153,69	363,84	177,56	298,375183
3195	184,34	76,63	3,765	301,7075	153,39	362,73	176,75	297,6203
3196	183,12	76,74	3,764	301,5196	153,03	361,89	175,61	296,636536
3197	181,91	76,77	3,766	301,1519	152,78	361,13	174,30	295,256775
3198	180,69	76,46	3,764	299,2351	152,85	359,82	172,69	294,588715
3199	179,18	76,27	3,668	298,5156	153,25	358,93	171,42	293,406647
3200	178,17	76,55	3,667	298,7051	153,70	358,82	170,08	292,462311
3201	177,14	76,31	3,668	297,0381	153,63	356,66	169,18	291,137817
3202	176,11	76,13	3,668	296,0255	153,31	355,68	167,58	290,348236
3203	175,14	76,32	3,668	296,1135	152,59	354,25	166,71	289,373474
3204	174,18	76,57	3,570	295,2482	151,74	353,34	165,82	288,789917

APPENDIX 5: Participants

Danick Power ing.
v-p operation
Services Polytests inc.
450.741.3636
www.polytests.com

Maxime Martin
Technicien
Services Polytests inc.
450.741.3636
www.polytests.com

Matthew Romanow
IHP

APPENDIX 7: Operator's manual

IRONSTRIKE®
HEAT FOR LIFE

INSTALLATION AND OPERATION MANUAL

COUNTRY® COLLECTION

EPA Certified Wood-Burning Fireplace Insert

Save These Instructions For Future Reference

P/N 900900-00, Rev. NC, 08/2018

P900900-00



C160TGL



C160AGL

Striker™ Wood Fireplace Inserts Models C160TGL and C160AGL

PFS® C US

Report # 14-186

A French manual is available upon request. Order P/N 900900-01.

Ce manuel d'installation est disponible en francais, simplement en faire la demande. Numéro de la pièce 900900-01.

This appliance must be properly installed and operated in order to prevent the possibility of a house fire. Please read this entire installation and operation manual before installing and using your wood fireplace insert. Failure to follow these instructions could result in property damage, bodily injury or even death. Contact your local building or fire officials to obtain a permit and information on any installation requirements and inspection requirements in your area.

NATIONAL FIREPLACE INSTITUTE NFI CERTIFIED
www.nficertified.org

We recommend that our woodburning hearth products be installed and serviced by professionals who are certified in the U.S. by the National Fireplace Institute® (NFI) as NFI Woodburning Specialists or who are certified in Canada by Wood Energy Technical Training (WETT).

Wood Energy Technical Training www.wettinc.ca

⚠ WARNING

- **Hot! Do not touch! The glass and surfaces of this appliance will be hot during operation and will retain heat for a while after shutting off the appliance. Severe burns may result.**
- **Carefully supervise children in the same room as appliance.**

Agency Copy

CONGRATULATIONS!

When you purchased your new wood-burning fireplace insert, you joined the ranks of thousands of individuals whose answer to their home heating needs reflects their concern for aesthetics, efficiency and our environment. We extend our continued support to help you achieve the maximum benefit and enjoyment available from your new wood-burning fireplace insert.

Thank you for selecting an Innovative Hearth Products, LLC (IHP) wood-burning fireplace insert as the answer to your home heating needs.

TABLE OF CONTENTS

Using This Manual 2
Important Safety Information 3
Testing Information 4
Draft Requirements 4
Selecting the Proper Venting System 4
Negative Pressure Warning 5
Creosote 5
Ash Disposal 5
Fuel 6
Burn-In Period 6
Paint Curing 6
Brick Installation 7
Required Clearances 8
Hearth Protection 9
Chimney Requirements 10
Installation Procedure - Masonry Chimney 10
Positive Flue Connection 11
Installation Procedure - Factory-Built Zero Clearance Fireplaces 12
Fireplace Pre-Installation Preparation 12
Insert Pre-Installation Preparation 12
Chimney Liner Installation 13
Installing the Insert 13
Post Installation Checks 13
Operating Hints 14
Starting and Maintaining a Fire 14
Blower Operation (optional kit) 15
Operating Techniques and Hints 16
Getting the Most Out of Your appliance 16
Maximizing Your appliance's Overall Efficiency 16
Achieving Clean, Long Burns 16
Maintenance 17
Clean Glass 17
Troubleshooting 19
Do's and Don'ts 20
Smoke Detector Recommended 20
Carbon Monoxide Monitor Recommended 20
Replacement Parts List 21-23
Accessories 24
Safety / Listing Label 25
Warranty 27
Product Reference Information 28

USING THIS MANUAL

Please read and carefully follow all of the instructions found in this manual. Please pay special attention to the safety instructions provided in this manual.

PRODUCT IS SUBJECT TO CHANGE WITHOUT NOTICE

IMPORTANT SAFETY AND WARNING INFORMATION

READ THIS MANUAL IN ITS ENTIRETY AND UNDERSTAND THESE RULES TO FOLLOW FOR SAFETY.

1. When this room heater is not properly installed, a house fire may result. To reduce the risk of fire, follow the installation instructions. Contact local building or fire officials about restrictions and installation inspection requirements in your area.
2. Wear gloves during installation to avoid injury from sharp edges on the insert and/or its parts.
3. This unit is designed and engineered to burn only dry, well-seasoned wood. Burning wet wood will greatly reduce your inserts efficiency, produce excessive amounts of smoke and can cause dangerous chimney fires due to creosote build-up.
4. Before opening the door, the draft control must be fully open to avoid possible combustion flash (ignition of hot volatile gases as the door is opened).
5. Never use gasoline, gasoline-type lantern fuel, kerosene, charcoal lighter fluid, or similar liquids to start or 'freshenup' a fire in this heater. Keep all such liquids well away from the heater while it is in use. DO NOT USE CHEMICALS OR FLUIDS TO START THE FIRE.
6. While burning, fuel utilizes oxygen from the air in the room. Be sure to allow an adequate amount of fresh air into the room where the insert is burning.
7. The outside surface of the insert will be hot while burning properly and can set items like clothing and curtains on fire. Keep furnishings and other combustible materials away from the insert. Using the heat from the insert to dry wet clothing can be hazardous if clothes are placed too near the surface of the insert.
8. HOT WHILE IN OPERATION. KEEP CHILDREN, CLOTHING FURNISHINGS AND COMBUSTIBLE MATERIAL A CONSIDERABLE DISTANCE AWAY. CONTACT MAY CAUSE SKIN BURNS. Do not allow children to play near the insert without close supervision. Do not touch the insert while it is burning. Use extreme caution while the unit is in use. Surface temperatures become dangerously hot and can cause serious burns.
9. Do not allow anyone to operate the insert who is not familiar with the operating instructions.
10. Attempts to achieve heat output rates that exceed insert design specifications can result in permanent damage to the insert. Never leave your insert unattended on high burn rates. This may cause overfiring. Overfiring the insert may cause a house fire. If the insert glows, you are overfiring.
11. Keep a water hose or hand-operated fire extinguisher close for safety.
12. Smoke Detectors - Since there are always several potential sources of fire in any home, we recommend installing smoke detectors. If possible, install the smoke detector in a hallway adjacent to the room (to reduce the possibility of occasional false activation from the heat produced by the insert). If your local code requires a smoke detector be installed within the same room, you must follow the requirements of your local code. Check with your local building department for requirements in your area.
13. Inspect your chimney at least once a month during the burning season to check for soot and creosote accumulations. Any accumulations over 1/8" thick should be removed by a professional chimney sweep. Do not attempt to burn out heavy creosote accumulations with a hot fire. If large accumulations are occurring, review your burning procedures.
14. If a creosote fire should develop, the fire department should be called immediately and then attempts should be made to control the fire until assistance arrives. If a "runaway" fire should develop causing over-heating of the insert, the door and draft regulators should be closed immediately. The fire should die down once deprived of oxygen. After a severe chimney fire, the complete chimney system should be checked before further use.
15. Do Not Use Grate Or Elevate Fire - Build Wood Fire Directly On Hearth (firebrick). Do not use andirons or other methods of supporting the fuel.
16. Please read this entire manual before you install and use your new room heater. Failure to follow instructions may result in property damage, bodily injury, or even death.
17. Check all local building and safety codes before installation. The installation instructions and appropriate code requirements must be followed exactly and without compromise. In the absence of local codes the following standards and codes must be followed.
18. In the U.S.A, install in accordance with the National Fire Protection Association's Code, NFPA 211, Standards for Chimneys, Fireplaces, Vents and Solid-Fuel-Burning Appliances, or similar regulations, may apply to the installation of a Solid-Fuel-Burning appliance in your area. In Canada, the guideline is established by the CSA Standard, CAN/CSA-B365-M93, Installation Code for Solid-Fuel-Burning Appliances and Equipment.
19. DO NOT CONNECT TO OR USE IN CONJUNCTION WITH ANY AIR DISTRIBUTION DUCTWORK UNLESS SPECIFICALLY APPROVED FOR SUCH INSTALLATIONS.
20. WARNING: BURNING IMPROPER FUEL (I.E. CHARCOAL) CAN RESULT IN CARBON MONOXIDE POISONING, WHICH MAY LEAD TO DEATH!
21. Carbon Monoxide Poisoning – early signs of carbon monoxide poisoning resemble the flu with headaches, dizziness, or nausea. If you have these signs, get fresh air at once! Have the heater inspected by a qualified service technician. Some people are more affected by carbon monoxide than others. These include pregnant women, people with heart or lung disease or anemia, those under the influence of alcohol, and those at high altitudes.
22. Failure to use manufacturer provided parts, variations in techniques and construction materials or practices other than those described in this manual may create a fire hazard and void the limited warranty.
23. Do not make any make-shift compromises during installation. Any modification or alteration may result in damage to the appliance or dwelling and will void the warranty, certification and listings of this unit.
24. These appliances are designed as supplemental heaters. Therefore, it is advisable to have an alternate heat source when installed in a dwelling.

25. **Do Not Overfire – If Heater or Chimney Connector Glows, You Are Overfiring.**
26. **DO NOT CONNECT THIS UNIT TO A CHIMNEY FLUE SERVING ANOTHER APPLIANCE.**
27. **DO NOT BURN GARBAGE OR FLAMMABLE FLUIDS SUCH AS GASOLINE, NAPHTHA OR ENGINE OIL.**
28. **This wood heater has a manufacturer-set minimum low burn rate that must not be altered. It is against federal regulations to alter this setting or otherwise operate this wood heater in a manner inconsistent with operating instructions in this manual.**

⚠ WARNING

This product can expose you to chemicals including Carbon Black, which is known to the State of California to cause cancer, and Carbon Monoxide, which is known to the State of California to cause birth defects or other reproductive harm. For more information go to www.P65Warnings.ca.gov

TESTING INFORMATION

This manual describes the installation and operation of these non-catalytic wood heaters. These heaters meet the U.S. Environmental Protection Agency's emissions limits, and are compliant with the 2020 Cordwood Standard. This heater has been developed, tested and constructed in accordance with the requirements of UL 1482, ULC S628 and HUD standards and is listed by PFS Corporation. It has been approved for residential and alcove installations.

Model	Emission Rate	EPA Test Range BTU/hr	Max. Output BTU/hr	Efficiency
C160(T/A)GL	2.1 grams/hr	16,000-42,600	55,600	70% *

** Default - Category rating as assigned by the EPA. The estimated efficiency is as follows: 63% (non-catalyst equipped), 72% (catalyst-equipped), and 78% (wood pellets). See § 60.536(i)(3) at www.epa.gov.*

DRAFT REQUIREMENTS

Your wood fireplace insert is dependent upon a properly functioning chimney for optimum performance. It is a high efficiency appliance that loses much less heat up the chimney than older appliances and fireplaces. For this reason it is important to match the fireplace insert to the chimney. The chimney has two functions:

1. It draws combustion air into the appliance (without air, no fuel will burn) and
2. It exhausts combustion by-products. Your new appliance is what is known as a "natural draft" appliance.

The appliance depends solely on the natural draft of the chimney system to draw combustion air into the unit. Draft is the force that moves air from the appliance up into the chimney. The amount of draft in your chimney depends on the length of the chimney, local geography, nearby obstructions and other factors. Too much draft may cause excessive temperatures in the appliance (overfiring). Slow or inadequate draft equals poor combustion and possible smoking problems.

The following are some conditions that may contribute to poor chimney draft:

1. A chimney too large for your appliance.
2. A chimney with not enough height to produce adequate draft.
3. A chimney with excessive height (this may allow exhaust to cool too much before exiting, which will stall the rate the exhaust exits).
4. Offsets in the venting system are too restrictive (see *Chimney Guidelines).*

Inadequate draft will cause the appliance to leak smoke into the room through the fireplace insert and the chimney connector joints.

Excessive draft may cause an uncontrollable burn or a glowing red fireplace insert or chimney part.

Overfiring Damage - If the heater or chimney connector glows, you are overfiring. Other symptoms may include: Cracking, warping or burning out of components, plated accessories may turn color, stove glass may develop a haze, which will not come off with cleaning.

Overfiring of a stove or fireplace insert is a condition where excessive temperatures are reached, beyond the design capabilities of the appliance. The damage that occurs from overfiring is not covered under the manufacturer's limited warranty.

Also see *Troubleshooting* on ***Page 19***.

SELECTING THE PROPER VENTING SYSTEM

The appliance is merely one component of a larger system. The other equally important component is the venting system. This is necessary for achieving the required flow of combustion air to the fire chamber and for safely removing unwanted combustion by-products from the appliance. If the venting system's design does not promote these ends, the system may not function properly. Poorly functioning venting systems may create performance problems as well as be a safety hazard. **A draft test should read greater than .04' W.C. (inches water column) and less than .08" W.C**. As per NFPA-211 standard (see paragraph below), the installer must take into account all variables within the installation and install the appliance in such a manner that satisfies the draft requirements of the appliance. See *Chimney Guidelines* below to assist you in selecting the proper venting system for your installation.

American National Standards Institute ANSI/NFPA 211, Standard for Chimneys, Fireplaces, Vents, and Solid Fuel-Burning Appliances - See Draft Section: A chimney or vent shall be so designed and constructed to develop a flow sufficient to completely remove all flue and vent gases to the outside atmosphere. The venting system shall satisfy the draft requirements of the connected appliance in accordance with the manufacturer's instructions.

Chimney Guidelines:

- This appliance requires approximately 12 feet minimum of "effective draw" provided by the venting system. As a rule of thumb, every 90 degree total direction change in the venting will result in a loss of approximately 5 feet of "effective draw." Example: If two 45 degree offsets are used, subtract 5 feet from the actual vertical vent height to determine your "effective draw." In this case if you had 14 feet of vertical vent, the effective draw would only be approximately 9 feet (14 ft. - 5 ft. = 9 ft.), therefore it may be necessary to add additional height to the venting system.

- In well insulated and weather tight homes, it may be difficult to establish a good draft up your chimney. The poor draft is caused by a shortage of air in the house *(see Negative Pressure Warning on **Page 5**)*.

Chimney Height Requirements

The chimney must extend 3' (.92m) above the level of roof penetration and a minimum of 2' (.61m) higher than any roof surface within 10' (3m) (see below). Check with your local building officials for additional requirements for your area.

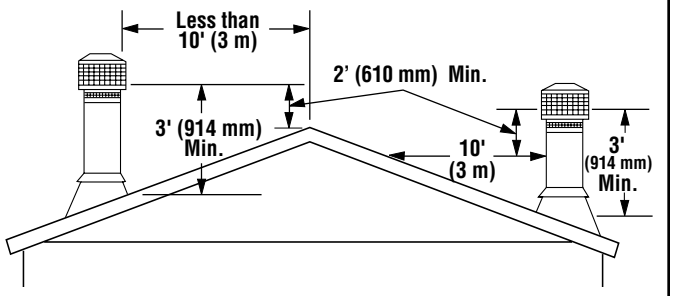

***Figure 1** - Chimney Height Requirements*

To pass inspection in nearly any jurisdiction, the chimney must meet both safety and exhaust flow requirements. The (3' by) 2' by 10' rule applies to both masonry and factory-built chimneys.

**** Ref. USA - National Standard, NFPA 211-latest edition and Canada National Standard CSA B365-01-latest edition. Vents installed with a listed cap shall terminate in accordance with the terms of the cap's listings.***

NEGATIVE PRESSURE WARNING

This appliance is not designed to be operated in a negative pressure. In very airtight homes with large kitchen exhaust fans, furnace cold air returns, fresh air exchange systems and any other air system in close proximity to the heating appliance may create a negative pressure in the same room as the heating appliance. This can create dangerous back drafting of the fireplace insert and chimney joints, drawing combustion by-products into the home. Be sure your home has adequate makeup air to eliminate negative pressures caused by the above-mentioned sources. IHP accepts no liability for damages resulting from negative pressures described above.

Ventilation Requirements - Provide adequate air for combustion. The fresh air requirements of this appliance must be met within the space where it will be installed. Ventilation is essential when using a Solid-Fuel-Burning heater. In well insulated and weather tight homes, it may be difficult to establish a good draft up the chimney (caused by a shortage of air in the home). The lack of air is caused by many common household appliances which exhaust air from the home (such as a furnace, heat pump, air conditioner, clothes dryer, exhaust fans, fireplaces, and other fuel burning appliances). Also, the combustion process of this heater uses oxygen from inside the dwelling. If the available fresh air delivery in the dwelling is insufficient to support the demands of these appliances, problems can result (i.e. excessive negative pressure can develop in the dwelling which will affect the rate at which this appliance can draft thus resulting in performance problems. To correct this problem it may help to open a window (preferably on the windward side of the house).

CREOSOTE, FORMATION AND NEED FOR REMOVAL

When wood is burned slowly, it produces tar and other organic vapors, which combine with expelled moisture to form creosote. The creosote vapors condense in the relatively cool chimney flue of a slow-burning fire. As a result, creosote residue accumulates on the flue lining. When ignited, this creosote makes an extremely hot fire. The chimney and chimney connector should be inspected at least once monthly during the heating season to determine if a creosote build-up has occurred. If creosote has accumulated (1/8" [3 mm] or more), it should be removed to reduce the risk of a chimney fire.

Establish a routine for the fuel, wood burner and firing technique. Check daily for creosote build-up until experience shows how often you need to clean to be safe. Be aware that the hotter the fire the less creosote is deposited, and weekly cleaning may be necessary in mild weather even though monthly cleaning may be enough in the coldest months. Contact your local municipal or provincial fire authority for information on how to handle a chimney fire. Have a clearly understood plan to handle a chimney fire.

DISPOSAL OF ASHES

Whenever ashes get 3 to 4 inches deep in your firebox, and when the fire has burned down and cooled, remove excess ashes. Leave an ash bed approximately 1 inch deep on the firebox bottom to help maintain a hot charcoal bed.

Ashes should be scooped out of a cool appliance with a small metal shovel. Ashes should be placed in a steel container with a tight fitting lid and moved outdoors immediately. Other waste shall not be placed in this container. The closed container of ashes should be placed on a non-combustible floor or on the ground, well away from all combustible materials, pending final disposal. If the ashes are disposed of by burial in soil or otherwise locally dispersed, they should be retained in the closed container until all the cinders have thoroughly cooled. Ashes can ignite up to 72 hours after removal from the appliance or insert.

FUEL

This appliance is designed to burn dry seasoned natural wood only (see *Page 20* for a list of prohibited fuels). Failure to burn proper fuels only will void the certification and the warranty of the appliance.

Dry, seasoned wood is that which has been cut, split and allowed to dry under a covered area where air is free to flow and circulate under and around the wood (not under a tarp or plastic). Make sure wood is not stacked directly on the ground, it may absorb moisture from the ground. It should be allowed to dry in these conditions for a minimum of six months, preferably one year or more. **IT MUST BE UNDERSTOOD THAT WOOD CANNOT BE LEFT IN ANY KIND OF WET OR DAMP AREA OR IT WILL NEVER BECOME COMPLETELY SEASONED.**

Do Not store fuel within space heater installation clearances or within the space required for refueling and ash removal.

DO NOT OVERFIRE THIS HEATER

Attempts to achieve heat output rates that exceed heater design specifications can result in permanent damage to the heater.

What does "Well-Seasoned" mean?

When a tree is cut down, the wood is green, full of sap and moisture. This moisture content can exceed 80%, which must be reduced to less than 20%. Wood properly seasoned is then capable of generating the heat the stove was designed to provide.

Green wood does not burn easily. Attempting to burn green wood often results in a lot of smoke and very little fire. Time is the most important factor in seasoning wood. Ideally the moisture content should be reduced to 11-20%. ***NOTE: The use of a firewood moisture meter is recommended to ensure the firewood contains less than 20% moisture.***

Seasoning Guide
Softwoods - 6 months to 18 months
Hardwoods - 12 months to 24 months

Logs that are 5" diameter across or larger should be split in half, three pieces if over 8 inches, and four pieces when over a foot across. If a tree has been dead for 2 - 4 years it still needs to be cut, split, and seasoned for 6 to 24 months depending on the wood.

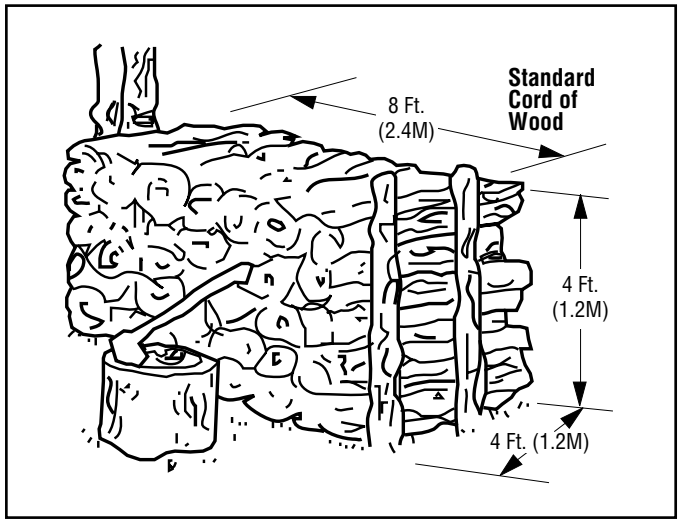

PAINT CURING

If your appliance has plated accessories, be sure to clean it with a household type glass cleaner and a very soft cloth to remove any fingerprints and residues prior to the first fire and before any fire if the plated accessory has been handled or soiled. Do not close the door tightly during the "Burn-In Period." Also, open the door frequently (every 5-10 minutes) to keep the gasket from adhering to the curing paint. Ventilate the house well during these first firings as the paint gives off carbon dioxide and unpleasant odors. It is recommended that persons sensitive to an imbalance in the indoor air quality avoid the appliance during the curing process.

Your new appliance is painted with a high temperature paint that cures during the first few firings. We recommend that you put your stove or fireplace insert through a regimen of three burns. The first two should last for 20 minutes each at 250 degrees (the appliance should be allowed to cool completely between each burn). The third should be a burn of at least 450 degrees F. for 45-60 minutes. The paint will become soft, gummy and emit non-toxic smoke during these burns. After the appliance cools down for the third time, the paint will harden. **DO NOT BUILD A LARGE ROARING FIRE UNTIL THIS CURING EFFECT IS COMPLETE OR YOU MAY DAMAGE THE FINISH OF YOUR STOVE OR INSERT.** Spray can touch-ups should be done only with a high temperature stove paint (cat. no. H8159), available from all IHP dealers.

BURN-IN PERIOD

Please be patient with the heat output of your appliance for the first few weeks. The steel will go through a curing process that eliminates moisture, which is deep in the steel and firebrick. This moisture will reduce initial heat output of your appliance and may make it difficult to start. **(DO NOT OVERFIRE THE STOVE OR INSERT DURING THIS PROCESS. IF THE STOVE OR CHIMNEY BECOMES RED, REDUCE THE AMOUNT OF AIR ENTERING THE STOVE OR INSERT IMMEDIATELY).**

NOTE: DIAGRAMS & ILLUSTRATIONS ARE NOT TO SCALE.

BRICK INSTALLATION

Brick Installation

CAUTION: Wear gloves during brick installation in case of sharp edges behind the fireplace insert.

NOTE: *Installation of the baffle boards and baffle blanket is easier when you can still access the flue outlet, (before connecting the flue vent).* ***Be sure the baffle blanket is placed flat on the baffle boards so as not to block exhaust flow to the flue.*** *Use a ruler or a piece of kindling to reach over the baffle blanket to be sure it is completely flat on top of the baffle boards.*

1. Install bricks #1-18 in the numbered sequence shown in ***Figure 2***.
2. Next, you will install the rear baffle boards which are the smaller two of the four baffle boards. The boards will be installed with the 3-9/16" dimension from the front to the rear of the firebox. These boards will be placed on the top side of the rear baffle just to the rear of the middle secondary tube, you will push the baffle boards towards the rear of the firebox until they fall in place at the rear side of the middle secondary tube. You will place one board to the far left side of the firebox and one board to far right side of the firebox. Confirm that both boards are laying flat on the rear baffle and that they are not overlapping each other.
3. Next, you will install the baffle blanket. It will be installed with the 11" dimension from the front to rear of the firebox. Install by lifting it into place between the front and rear baffle. Place the blanket over the rear baffle and rear baffle boards that you have just installed. Next you will place the baffle blanket that is protruding beyond the front side rear baffle on the top side of the front baffle.
4. The final step of the baffle board & baffle blanket installation will be installing the front baffle boards. The front baffle boards will be the two remaining baffle boards which are the larger two baffle boards of the four baffle board kit. They will be installed with the 7-3/8" dimension from the front to rear of the firebox. Start by setting the back side of the board on the rear baffle making sure that it is placed far enough back to lift up and onto the front baffle. Next you will place the front edge of the front baffle boards on the top side of the front baffle and slide them towards the firebox front until it stops against the front baffle edge. You will do this with each front baffle board with one to the right side of the firebox and one to the left side of the firebox. Confirm that the baffle blanket is directly on top of the baffle boards and that it does not protrude beyond the front baffle or front baffle boards as shown in ***Figure 4***.

WARNING: IF THE BRICKS ARE NOT INSTALLED EXACTLY AS SHOWN, THEY COULD FALL OUT OF PLACE DURING REFUELING OR BURNING OF THE INSERT, CAUSING SERIOUS INJURY.

Brick Sizes

(see Figures on this page)

A = 4-1/4 x 9"
B = 2-1/4 x 8-7/8"
D = 2-1/4 x 9"
E = 1-1/2 x 8-7/8"
F = Full Brick"
G = 1-1/2 x 9

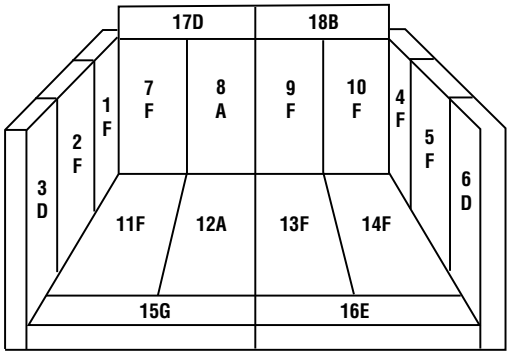

Front View - See the following for brick sizes

***Fits against the back of the firebox.**

NOTE: These bricks may be slightly smaller to adjust for steel and firebrick tolerances beyond our control. Be sure to measure and mark bricks with their numbers when removing.

Figure 2 - Firebrick Diagram

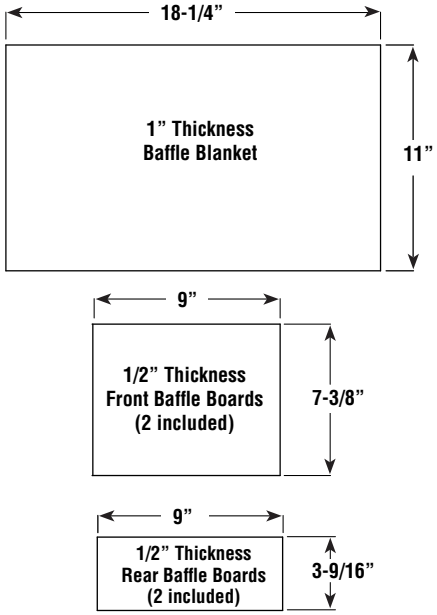

Figure 3 - Baffle Insulation Parts

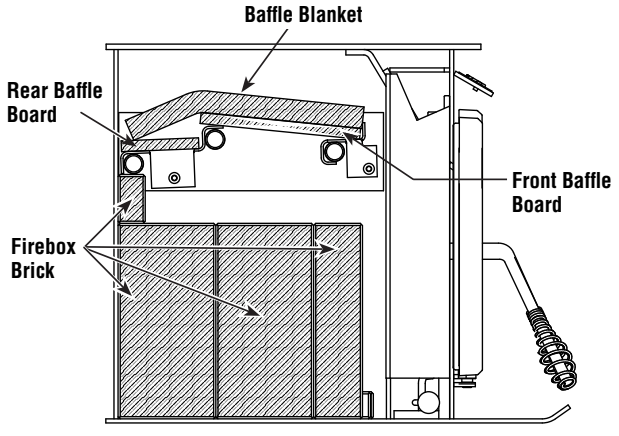

Figure 4 - Side Cut-A-Way View of Firebox

REQUIRED CLEARANCES

WARNING: BE ABSOLUTELY SURE THE DISTANCE BETWEEN THE HEATER AND THE SURFACE OF ANY COMBUSTIBLE CONSTRUCTION IS NOT LESS THAN SHOWN ON THIS PAGE.

Model	*A	*B	*C	*D	E(1)
C160(A/T)GL	USA-24" CAN-660mm	USA -15" CAN-450mm	20" 508mm	12" 305mm	USA-4-1/2" CAN-200mm
C160(A/T)GL with mantel and/or side shields	16" 406mm	10" 254mm	20" 508mm	8" 200mm	USA-4-1/2" CAN-200mm

Model	F (1)	G	H	J(2)	M
C160(A/T)GL	18" 450mm	12-1/2" 318mm	19-1/4" 489mm	4-3/8" 111mm	43" 1092mm
C160(A/T)GL with mantel and/or side shields	18" 450mm	12-1/2" 318mm	19-1/4" 489mm	4-3/8" 111mm	35" 889mm

* Reduced clearances may be available for A, B, C and D dimensions by using an optional mantel and/or side shields. Consult with your IHP dealer for the dimensions of the shields. Clearances can also be reduced for A, B, C and D dimensions per NFPA 211 - latest edition, Standard for Chimneys, Fireplaces, Vents and Solid Fuel-Burning Appliances (in Canada CSA B365 - latest edition). See section on "Reduction of Appliance Clearance with Specified Forms of Protection."

** Side view of optional mantel deflector shown.

(1)Hearth extension reductions: 2" (51mm) reduction for 2" (51mm) raised hearth. (USA) 16" minimum hearth extension on all stoves and inserts as measured from the door opening of the unit. (Canada) 18"(450mm) minimum hearth extension on all stoves and inserts as measured from the door opening of the unit. Minimum distance of floor protection to the side = 8" (200mm). This is measured from the sides of the door opening in the USA and from the sides of the insert in Canada.

(2) J = Maximum lintel depth without flue offset or smoke deflector.

This appliance may be installed in a bedroom in the United States.

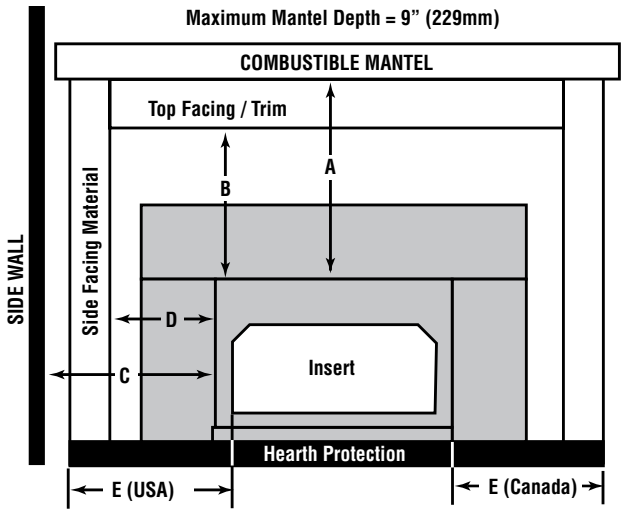

Figure 5

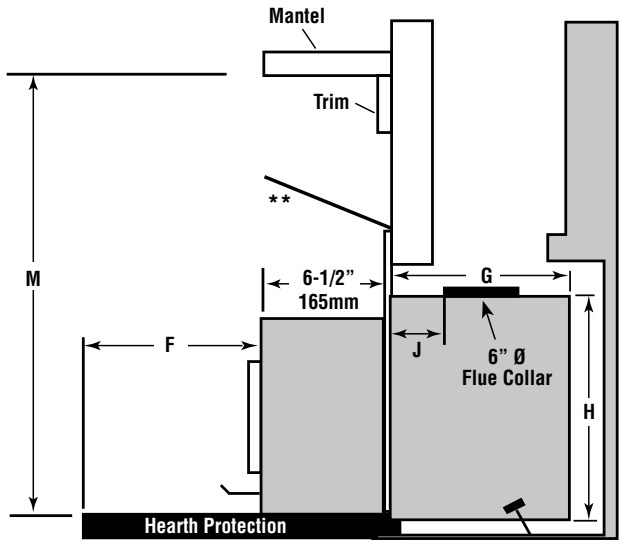

Figure 6

NOTE: Facing material that projects more than 3/4" (19mm) from the wall is considered a mantel or side wall.

C160(T/A)GL	ZC Fireplace UL 127	Masonry Fireplace UBC Chapter 37
Depth Min.	12-3/4" (324mm)	12-3/4" (324mm)
Height Min.	21" (533mm)	19-1/2" (495mm)
Width Min.	36" (914mm)	25-1/2" (648mm)
Lintel Max. Depth ❶	4-3/4" (121mm)	4-3/4" (121mm)

❶ *Without use of adjustable offset box or smoke deflector*

Table 1 - Fireplace Sizing

NOTE: DIAGRAMS & ILLUSTRATIONS ARE NOT TO SCALE.

HEARTH PROTECTION

The hearth and/or floor protection must be a thermally rated non-combustible hearth/floor protector meeting or exceeding a thermal rating of k=.84 or equivalent with a listed thickness of 3/8" (9.5mm) minimum in USA (3/4" - 19mm minimum in Canada). The covering must extend 18" (450mm) in front of the heater and 8" (200mm) to either side (measured from door opening in the USA and measured from the side of the unit in Canada).

Using Alternate Material As Floor / Hearth Protection

The hearth extension or alternate material used as a floor/hearth protector must be constructed of a durable noncombustible material having an equal or better thermal conductivity value (lower k value) of k=.84 BTU/IN FT2 HR °F or a thermal resistance that equals or exceeds r = 1.19 HR °F FT2 IN/BTU with a minimum thickness of 3/8" in USA or 3/4" in Canada. With these values, determine the minimum thickness of the alternate material required using the formula(s) and shown in ***Table 2 for USA and Table 3 for Canada***.

NOTE: *Any noncombustible material having a minimum thickness of 3/8"(9.5 mm) for USA or 3/4" (19mm) in Canada whose k value is less than .84 or whose r value is more than 1.19 is acceptable. If the alternate material used has a higher k value or lower r value will require a greater thickness of the material used. In some cases, if the k value is less or the r value higher, a thinner material may be used.*

Methods of determining floor protection equivalents:
To determine the thickness required for the alternate material when either the **"k"** value or **"r"** value is known, use either the **k formula** or **r formula**.

Example: If Micore 160 Mineral Fiber Board is to be used for the floor protection, how thick must this material be?

k_M = k value per inch of ***alternate*** material
r_M = r value per inch of ***alternate*** material
T_M = minimum thickness required for ***alternate*** material
T_s = standard thickness of the ***alternate*** material

k_L = k value per inch of ***listed*** material
r_L = r value per inch of ***listed*** material
T_L = minimum thickness of ***listed*** material

NOTE: An asterisk "*****" indicates, it is a value taken from ***Tables 2 and 3***.

Using the k formula:

FOLLOWING EXAMPLES ARE CALCULATED FOR USA REQUIRMENTS

Using the k formula:

Minimum thickness of alternate material (T_M) = k-value (per Inch) of alternate material (k_M) / k-value (per inch) of listed material (k_L) x Specified min. thickness of listed material (T_L)

T_M (inches) = k_M / *.84 x T_L

T_M (inches) = *.35 / *.84 x .375"

.156 (inches)= .417 x .375"

Answer - The minimum required thickness of the Micore 160 is .156" therefore round up to nearest standard thickness available which is 3/8" (.375")

Using the r formula:

Minimum thickness of alternate material = r-value (per Inch) of listed material / r-value (per inch) of alternate material x Specified min. thickness of listed material

T_M (inches) = r_L / r_M x T_L

T_M (inches) = *1.19 / *2.86 x .375"

.312 (inches)= .416 x .375"

Answer - The minimum required thickness of the Micore 160 is .156" therefore round up to near est standard thickness available which is 3/8" (.375")

Listed Material			
	k (per inch)	r (per inch)	Listed Min. Thickness
Listed Material	.84 K_L	1.19 r_L	3/8" (.375") T_L
** Approved Alternate Materials for Floor/Hearth Protection			
Alternative Materials	Thermal Values		Minimum Thickness (rounded to nearest 1/8 inch)
	k (per inch) K_M	r (per inch) r_M	Min. Thickness T_M
Kaowool M Board	.47	2.13	.42" (1/2")
Micore 160™ *U.S. Gypsum*	.35	2.86	.31" (3/8")
Micore 300™ *U.S. Gypsum*	.46	2.17	.41" (1/2")
Durock™ Cement Board *U.S. Gypsum*	1.92	.52	1.71" (1-3/4")
Hardibacker™	1.95	.51	1.74" (1-3/4")
Hardibacker 500™	2.30	.43	2.05" (2-1/8")
Cultured Stone Hearthstone™	2.82	.35	2.52" (2-5/8")
Wonderboard	3.23	.31	2.88" (3")
Super Firetemp M *Johns-Manville*	.61	1.64	.54" (5/8")
Super Firetemp L *Johns-Manville*	.54	1.85	.48" (1/2")
Face brick	9.00	.111	8.04" (8-1/8")
Common brick	5.00	.20	4.46" (4-1/2")
Cement mortar	5.00	.20	4.46" (4-1/2")
Ceramic tile	12.5	.08	11.16" (11-1/4")
Marble	~11	~.09	9.82" (9-7/8")

Table 2 - USA REQUIREMENTS

***** If the hearth extension material(s) that is intended to be used is NOT listed on Table 1, the material can still be used if the material(s) is noncombustible. However, the manufacturer of the material must provide either the listed k-value per inch or r-value per inch with listed thickness so that the minimum thickness required for the hearth can be calculated (per instructions here or as specified in the NFI Certification Manuals).***

SEE TABLE 3 ON FOLLOWING PAGE FOR CANADA REQUIREMENTS

NOTE: DIAGRAMS & ILLUSTRATIONS ARE NOT TO SCALE.

FOLLOWING EXAMPLES ARE CALCULATED FOR CANADA REQUIRMENTS

Using the k formula:

Minimum thickness of alternate material (T_M)	=	k-value (per Inch) of alternate material (k_M) / k-value (per inch) of listed material (k_L)	x	Specified min. thickness of listed material (T_L)
T_M (inches)	=	$\frac{k_M}{*.84}$	x	T_L
T_M (inches)	=	$\frac{*.35}{*.84}$	x	.75"
.312 (inches)	=	.417	x	.75"

Answer - The minimum required thickness of the Micore 160 is .312" therefore round up to nearest standard thickness available which is 3/8" (.375")

Using the r formula:

Minimum thickness of alternate material	=	r-value (per Inch) of listed material / r-value (per inch) of alternate material	x	Specified min. thickness of listed material
T_M (inches)	=	$\frac{r_L}{r_M}$	x	T_L
T_M (inches)	=	$\frac{*1.19}{*2.86}$	x	.75"
.312 (inches)	=	.416	x	.75"

Answer - The minimum required thickness of the Micore 160 is .312" therefore round up to nearest standard thickness available which is 3/8" (.375")

Listed Material			
	k (per inch)	r (per inch)	Listed Min. Thickness
Listed Material	.84 K_L	1.19 r_L	3/4" (.75") T_L
** Approved Alternate Materials for Floor/Hearth Protection			
Alternative Materials	Thermal Values		Minimum Thickness (rounded to nearest 1/8 inch)
	k (per inch) K_M	r (per inch) r_M	Min. Thickness T_M
Kaowool M Board	.47	2.13	.42" (1/2")
Micore 160™ *U.S. Gypsum*	.35	2.86	.31" (3/8")
Micore 300™ *U.S. Gypsum*	.46	2.17	.41" (1/2")
Durock™ Cement Board *U.S. Gypsum*	1.92	.52	1.71" (1-3/4")
Hardibacker™	1.95	.51	1.74" (1-3/4")
Hardibacker 500™	2.30	.43	2.05" (2-1/8")
Cultured Stone Hearthstone™	2.82	.35	2.52" (2-5/8")
Wonderboard	3.23	.31	2.88" (3")
Super Firetemp M *Johns-Manville*	.61	1.64	.54" (5/8")
Super Firetemp L *Johns-Manville*	.54	1.85	.48" (1/2")
Face brick	9.00	.111	8.04" (8-1/8")
Common brick	5.00	.20	4.46" (4-1/2")
Cement mortar	5.00	.20	4.46" (4-1/2")
Ceramic tile	12.5	.08	11.16" (11-1/4")
Marble	~11	~.09	9.82" (9-7/8")

Table 3 - CANADA REQUIREMENTS

CHIMNEY REQUIREMENTS

This appliance is approved for use in a masonry fireplace built to UBC Chapter 37 or equivalent with a minimum 25-1/2" (648 mm) width opening at the front of the fireplace.

This heater is designed to be installed into an existing masonry fireplace (built to UBC 37 or ULC S628 standards) or factory-built, solid-fuel and wood-burning fireplaces (listed to UL 127 or ULC S610) only.

Do not remove brick or mortar from masonry fireplace to accommodate insert. Approved with or without positive flue connection. Approved with minimum 6" (152 mm) diameter stainless steel listed reline system. IHP inserts are tested to UL 1482 / ULC S628 and listed by PFS Corporation.

IMPORTANT NOTE: See *Draft Requirements* and *Selecting a Proper Venting System* on ***Page 4*** to assist you in choosing the proper venting system for your installation.

Remove and clean behind unit frequently, as creosote build-up may occur rapidly.

WARNING: CHIMNEY CONNECTOR MUST BE IN GOOD CONDITION AND KEPT CLEAN. DO NOT INSTALL DAMAGED PARTS.

INSTALLATION PROCEDURES - MASONRY CHIMNEY

NOTES:

- *Although not required, a full-length stainless steel liner is recommended for optimum safety and performance. See your IHP dealer for details.*
- *When installing Your appliance with a positive flue connection, be sure to leave the insulation off the surround panels (flanges) and leave a 1/4" (6 mm) airspace between the surround panels and the facing of your fireplace.*
- *This appliance may be vented into a code-approved masonry chimney with flue liner.*

1. **READ ENTIRE INSTALLATION INSTRUCTIONS**.
2. Check all **REQUIRED CLEARANCES** as specified in the previous section ***(Page 8)*** of this installation and operation manual.
3. Wear gloves during installation in case of sharp edges on the fireplace insert and it's parts
4. Open or remove the existing fireplace damper. Make sure the damper cannot fall closed.
5. Install the two 1/2" x 3" (13 mm x 76 mm) leveling bolts -heads up- a few turns in the leveling nuts on each side of the outer chamber of the insert at the lower rear corners.
6. Position the insert in the center of the fireplace opening and push it back until the surround brackets are approximately 2" (51 mm) away from the fireplace front.
7. Install the side surround panels and push the insert up snug against the fireplace face. Then with the location selected remove the surround panels and level the fireplace insert with the leveling bolts using a 3/4" (19 mm) socket, extensions (to reach the bolt head) and a ratchet.
8. Glue the insulation around the outer edge of both the top and side surround panels.
9. Install the surround panels loosely, align and tighten. Check for a tight fit against the fireplace.
10. Install the brick and baffle as per instructions on ***Page 7***.

NOTE: DIAGRAMS & ILLUSTRATIONS ARE NOT TO SCALE.

POSITIVE FLUE CONNECTION

A positive flue connection is providing a seal between the vent pipe or liner and the existing fireplace chimney for the purpose of preventing room air passage to the chimney cavity of the fireplace. There are different approved methods to achieve this. See *Direct Connect Positive Flue Connection* on this page.

When creating a positive flue connection, a positive flue connector ring kit is required (sold separately - see *Figure 7).* The connector ring kit (listed below) provides a means to directly attach rigid pipe or a flex pipe adaptor to the flue outlet.

71161 - 6" Positive Flue Connector Ring Kit

Install connector ring kits per instructions provided in kits

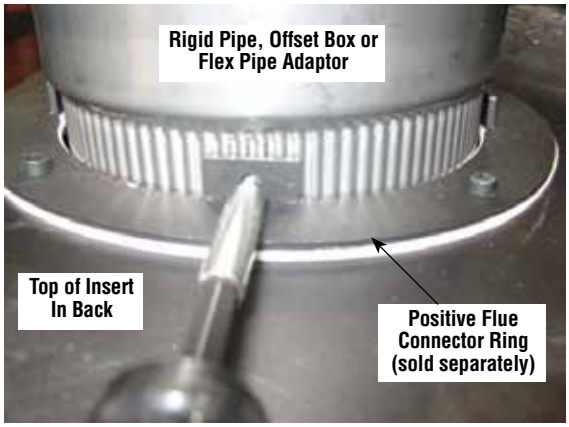

Figure 7 - Connector Ring Kit

Direct Connect Positive Flue Connection

<u>Required in Canada</u>

See the following instructions for approved methods of achieving a positive flue connection - See *Figure 8.*

A qualified installer should evaluate the existing fireplace to determine the best method for achieving a positive flue connection between the vent pipe or liner and the existing fireplace chimney. The most common method for achieving a positive flue connection in masonry fireplaces is to secure a seal-off plate (i.e. 22-gage sheet steel) in the fireplace throat using masonry screws. Other acceptable methods include packing noncombustible material (i.e. high temp fiberglass or ceramic insulation) around the vent pipe or using a flue adapter. Whatever "seal off" method is used, it must effectively seal the area to prevent room air passage to the chimney cavity of the fireplace.

Offset Boxes

Offsets can be handled using an offset box (it aligns flue outlet of insert with the fireplace flue (see ***Figure 9***). Care should be used to ensure that this adjustable offset box is oriented so it does not angle down when positioned on the insert flue outlet (level or slightly up at the outbound end is recommended).

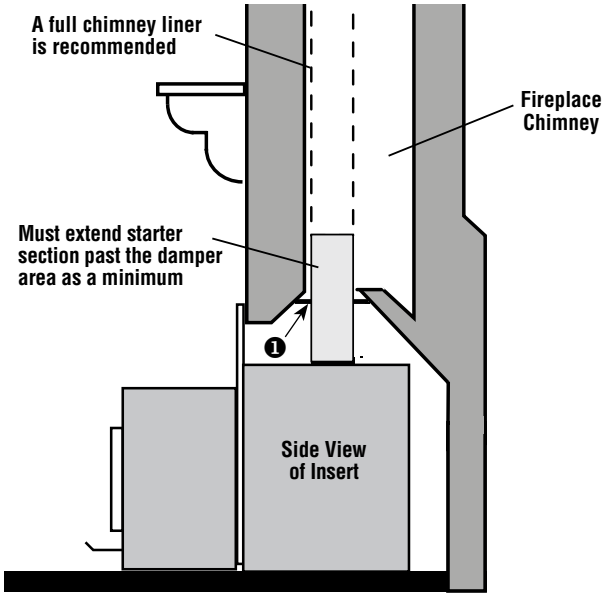

❶ A non-combustible seal is required at the damper area (to prevent dilution air from entering the chimney). See *Direct Connect Positive Flue Connection* on this page. A seal-off plate method is shown here.

Figure 8 - Positive Flue Connection

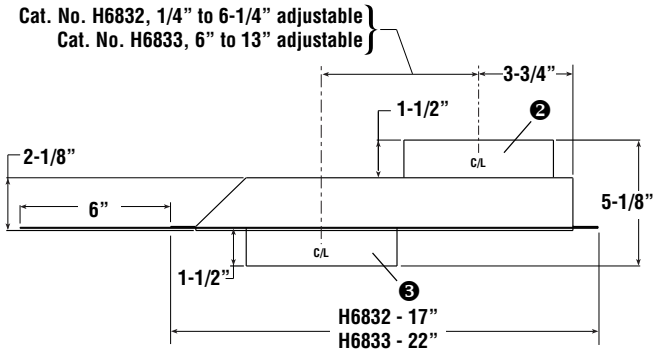

SIDE VIEW

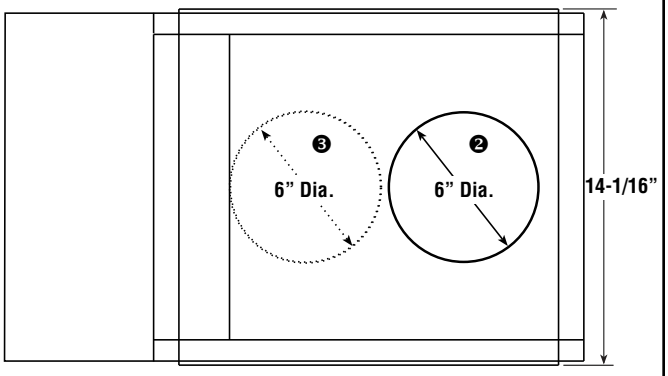

TOP VIEW

❷ Top 6" collar attaches to rigid pipe or flex liner.

❸ Bottom 6" collar attaches to connector ring on insert flue outlet.

Figure 9 - Offset Box Dimensions

NOTE: DIAGRAMS & ILLUSTRATIONS ARE NOT TO SCALE.

INSTALLATION PROCEDURE - FACTORY-BUILT ZERO CLEARANCE FIREPLACES

Clearance Fireplaces

Fireplace and Chimney Requirements

This appliance must only be installed in a zero clearance factory-built fireplace using 6" (152 mm) stainless steel pipe extending from the insert's flue into the chimney of the fireplace. **For optimum safety and performance** we recommend a full length stainless steel liner directly connected to the insert's flue outlet.

This appliance must only be installed in a zero clearance factory-built fireplace that is structurally sound. Fireboxes or chimneys that have flaws, burnouts, or warping must be replaced or repaired prior to installation. Check with your fireplace manufacturer if any problems exist.

All convection vents and louvers must be left unmodified and unobstructed.

This appliance can only be installed in the following brands of factory-built zero clearance fireplaces: **IHP**, **SUPERIOR, HEATILATOR, MAJESTIC, MARTIN, PREWAY, MARCO, TEMCO and FMI.**

The fireplace cavity must be 36" (914 mm) in width, 21" (533 mm) in height and 14" (356 mm) in depth. Installation in larger size fireboxes of the same brands is permissible.

Installations into other brands of the same size is permissible only with approval from local building officials.

Modifications allowed to the factory-built fireplace are as follows:
- Remove the damper
- Remove the smoke shelf or smoke baffle
- Remove ember catches
- Remove viewing screen/curtain
- Remove side and rear bricks
- Remove the fire grate
- Remove doors

The factory built chimney must be listed per UL 127 (US), and meet type HT requirements of UL 103 (US). Factory built fireplace chimneys tested to UL 127-1998, may be at the fireplace manufacturer's option, tested to the same criteria as UL 103 HT requirements. If the chimney is not listed as meeting HT requirements, or if the factory built fireplace was tested prior to 1998, a full height listed chimney liner must be installed from the appliance flue collar to the chimney top. The liner must meet type HT requirements (2100ºF) per UL 1777 (US). The liner must be securely attached to the insert flue collar and the chimney top. To prevent room air passage to the chimney cavity of the fireplace, seal either the damper area around the chimney liner with high temperature sealant or the fireplace front with fiberglass batting.

CLEARANCE TO COMBUSTIBLES

See "Required Clearances" on ***Page 8***.

FIREPLACE PRE-INSTALLATION PREPARATION

NOTE: IHP RECOMMENDS PROFESSIONAL INSTALLATION BY A LICENSED AND BONDED INSTALLER. SEE YOUR DEALER FOR RECOMMENDATIONS. IMPROPER INSTALLATION OR MIS-USE WILL VOID YOUR WARRANTY AND CREATE A SERIOUS SAFETY HAZARD.

Remove any doors or screen materials from the fireplace opening. Remove the damper mechanism completely. Also remove grates or ember catches inside the fireplace hearth. If your fireplace is equipped with a smoke shelf or baffle and if it interferes with the installation it may be removed. Side and rear refractory may also be removed, if necessary, to facilitate installation. No modifications shall be done unless allowed on the previous list. Retain all removed parts, they must be reinstalled before the fireplace can be used in it's original condition.

INSERT PRE-INSTALLATION PREPARATION

Install the two 3" (76 mm) long bolts (with the head up) through the nuts attached to the insert on the lower rear corner of each side. This will allow you to level the insert when placed into the fireplace.

Measure from the front of the top surround mount to the center of the flue. Determine if there is an alignment problem in connecting a liner from the chimney to the insert's flue. If there is an alignment problem, connection can be made using a short piece of stainless flex or a stainless steel offset box (available from your dealer). Before installing the liner, make any attachment brackets or drill any holes in the liner, offset box, or insert. Once installed, it may be difficult or impossible to drill additional holes.

FACTORY BUILT FIREPLACE WARNING TAG

The fireplace must not be altered, except for the exceptions listed below. The permanent metal warning label provided must be attached to the back of the fireplace, stating that the fireplace may have been altered to accommodate the insert, and must be returned to original condition for use as a conventional fireplace. The following modifications of factory built fireplaces are permissible: removal of damper, removal of smoke shelf or baffle, removal of ember catches, removal of fire grate, removal of viewing screen/curtain, and removal of doors.

NOTE: Secure the tag using screws or nails to the fireplace.

This fireplace has been altered to accommodate a fireplace insert and should be inspected by a qualified person prior to re-use as a conventional fireplace.

CHIMNEY LINER INSTALLATION

Remove the existing chimney cap and install a stainless steel liner into the chimney (if a special section has been used or drilled to attach to the insert, it must be the bottom piece). The next piece should be a dripless slip joint; followed by the rest of the chimney liner. Fasten the chimney at the top when it is positioned so that the slip joint will allow the lowest piece to slide up enough to clear the insert during installation. Insulate the top four to six feet between the liner and the chimney to prevent heat loss. Install the cap and flash if necessary to prevent water or creosote from entering the chimney's venting system.

From inside the fireplace firebox, attach any adaptors or flue offsets and slide the liner up as far as necessary for the bottom piece to clear the insert during installation.

In Canada, This fireplace insert must be installed with a continuous chimney liner of 6" diameter extending from the fireplace insert to the top of the chimney. The chimney liner must conform to the Class 3 requirements of CAN/ULC-S635, Standard for Lining Systems for Existing Masonry or Factory-Built Chimneys and Vents, or CAN/ULC S640, Standard for Lining Systems for New Masonry Chimneys.

INSTALLING THE INSERT

Place the insert into the fireplace, making sure to center it side to side. Slide the insert in until the surround mounts are approximately 1/2" (13 mm) from the face of the fireplace where the surround panels cover.

Lower the chimney and make attachment to the insert. Level the fireplace insert by using a 3/4" socket and a long extension and adjusting the bolts on either side of the insert.

Install the side surround panels with the screws supplied. Push the insert in until there is approximately a 1/4" (6 mm) gap between the back of the surround panels and the face of the fireplace. Before installing the top surround panel, make sure all connections are tight and that no part of the insert or chimney is touching the firebox or chimney in the fireplace. There must be a minimum of 1" (25mm) clearance between the fireplace insert and the zero clearance fireplace. Install the top surround panel.

If additional support is necessary, factory punched holes in the front corners of the bottom air chamber will accept leveling legs. Carefully measure the distance from the hearth protection to the bottom of the fireplace insert. Use 3/8" diameter bolts that are 1/2" (13 mm) longer than the distance just measured. Thread a nut onto the bolt approximately 1" (25 mm). Lift the fireplace insert slightly and insert a bolt into each hole and then thread the nut up the bolt until the front is securely supported. Install another nut onto the bolt through the air space in the fireplace insert and tighten securely. If desired an insert front support, Cat. No. 71129, is available to fill the space between the insert and the hearth protection.

Install the brick and baffle as per ***Page 7***.

POST INSTALLATION CHECKS

1. Check that all chimney pipe joints are securely fastened.
2. Be sure all roof flashings are watertight (if applicable).

FOR YOUR OWN PROTECTION AND INSURANCE PURPOSES, HAVE YOUR CHIMNEY AND CONNECTOR PIPE INSTALLATION INSPECTED BY YOUR LOCAL BUILDING CODE AUTHORITY OR FIRE MARSHAL BEFORE STARTING A FIRE IN YOUR STOVE OR INSERT. NOTIFY YOUR INSURANCE COMPANY.

OPERATING HINTS

1. Burn only dry, well-seasoned wood for maximum heat output. In some states it is illegal to burn wet wood or anything other than clean, dry wood products.
2. Your stove or fireplace insert is designed to operate with the door closed! Operate only with the door shut tightly at all times except when loading wood and possibly on start up to establish a draft. Never leave the unit unattended while the front door is slightly opened.
3. DO NOT hit or move the baffle boards while loading wood. Occasionally check the baffle. Make sure the baffle blanket is always flush with the front of the baffle boards. Loading oversized logs may dislodge the baffle boards.
4. **CAUTION: THE DRAFT CONTROL MUST BE FULLY OPEN BEFORE OPENING THE DOOR TO AVOID POSSIBLE COMBUSTION FLASH!!** (Ignition of hot volatile gases as the door is opened).
5. Feeding excessive amounts of fuel to the appliance should be avoided. It is important to supply it with sufficient draft and fuel to maintain a moderately hot fire. If, during overnight burns, heavy creosote deposits develop inside your stove or fireplace insert and on the door, the draft is set too low - review your burning habits!

⚠ WARNING

Be careful not to abuse door assembly by striking or slamming it. If the door assembly or glass is broken or damaged, they must be replaced with factory original parts before heater can be safely operated. Use only components provided by the manufacturer as replacement parts.

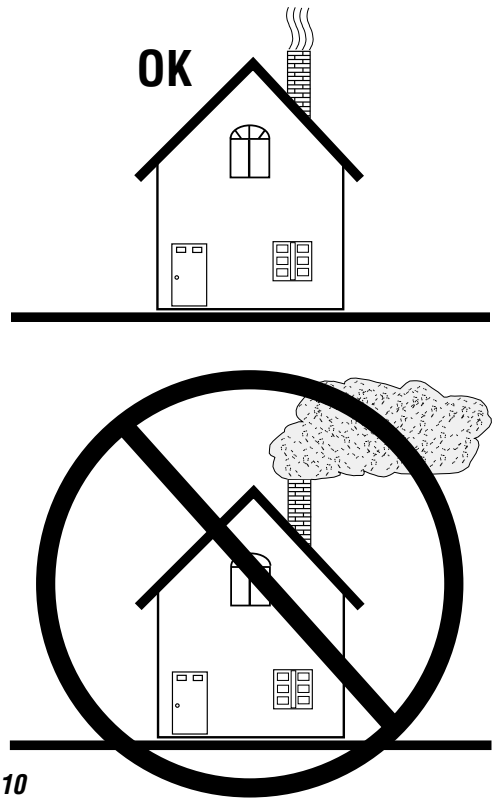

Figure 10

STARTING AND MAINTAINING A FIRE

Be sure to clean plated accessories with a household type cleaner and a very soft cloth to remove any fingerprints and residues prior to the first fire.

1. **NEVER USE FLAMMABLE LIQUIDS TO START OR REKINDLE A SOLID FUEL FIRE!!**
2. Fully open the primary draft control by pulling the 1" plastic knob out on the left side (lower front corner) until it stops (away from the fireplace insert). This control determines the amount of air entering the fireplace insert. Pushing it toward the fireplace insert reduces the burn rate in the firebox. For your convenience, the rod on this control is marked with four grooves to assist you in obtaining repeatable burn rates.
3. Place a small amount of crumpled paper in front of the firebox and cover it with a few pieces of kindling.
4. Light the paper and allow sufficient time for the kindling to become fully engulfed in flames. You will now close the wood units front door. (Your wood units front door may or may not need to be left slightly open during this start up process, this depends on the appliance model and the amount of draft present. Do not leave the unit unattended while the front door is slightly open) Once kindling is burning well, larger pieces of wood may be added, then the door should be fully closed if there was the need to keep it slightly open during start up.

   DO NOT LEAVE THE APPLIANCE UNATTENDED WHILE THE FRONT DOOR IS SLIGHTLY OPEN.

   CAUTION: Do Not alter the adjustment range of the draft control for increased firing for any reason.

   Operate only with fuel door and ash drawer closed. Maintain all seals in good condition. Do not operate with broken glass.

   Do Not build the fire too close to the glass.

   Do not operate the appliance with the door open or ajar other than possibly during start up to create a draft (Do not leave the unit unattended while the front door is slightly open during start up). Operating the appliance with the door open other then in initial start up if needed will produce extreme temperatures within the appliance. Damage caused from over-firing is not covered under the manufacturers limited warranty.
5. When operating any wood burning appliance, it is important to become familiar with how the damper control affects heat output and the overall temperature of the appliance. A stove thermometer can be a helpful tool to help ensure you are not over-firing your appliance and it will also ensure you are burning fuel at a rate that is most efficient. Place a stove thermometer on the top of the appliance. Monitor the temperature every 15 minutes or so until you become more familiar with your appliance. Close the damper all the way down if you begin to reach 600 degrees, as this is a sign that you are operating your appliance at too high a temperature.
6. For best results, use smaller pieces of wood to get the appliance temperature very high before loading larger wood for sustained burns. If necessary, crack the door to allow ignition of the fuel charge. Do not leave the unit unattended while the front door is slightly open. Now you can add larger pieces of wood and after several minutes of high burn, set the left control for the desired heat output. Check the exhaust in about 15 to 20 minutes. Large amounts of smoke indicate an improper burn setting (either too high or too low). Adjust and recheck in 5 to 10 minutes.

NOTE: DIAGRAMS & ILLUSTRATIONS ARE NOT TO SCALE.

BLOWER OPERATION

Blower Operation

The blower can be operated manually or automatically (blower will turn on when the stove or insert is hot and turn off when the stove or insert is cool).

The rocker switch on the control panel allows you to select between manual operation or automatic operation as follows (see ***Figure 10***):

MANUAL OPERATION: Turn rocker switch to the manual position (up) and adjust rheostat knob to the desired speed. The blower will have to be manually turned "OFF" by rotating the rheostat knob counterclockwise until it clicks.

AUTO OPERATION: Turn rocker switch to the "AUTO" position and the rheostat to the ON position (rotate rheostat knob clockwise until it clicks). When the stove or insert warms up, the blower will automatically turn on (adjust rheostat knob to the desired speed setting). When the stove or insert cools down, the blower will automatically turn off.

Rheostat Operation - The highest blower speed is obtained by turning the rheostat knob clockwise until it clicks "ON", then rotate towards "HIGH" to increase blower speed. Rotate the knob clockwise for a lower speed. To turn off, continue to rotate the knob counterclockwise until it clicks "OFF."

Blower Operation Guidelines

While in auto operation mode, the blower will turn off and on based on the temperature of the appliance. Auto operation ensures there is sufficient heat build-up to warm the air being moved by the blower before the blower is turned on. Likewise, when the appliance cools off, the blower is turned off to prevent circulating cool air. Depending on the size and intensity of the fire it may be necessary to adjust the blower speed accordingly to ensure uninterrupted blower operation. For example a small fire may require a slower blower speed to keep the heat output by the blower consistent. If the blower is operated in manual mode, it may be necessary to adjust the blower speed as the fire begins to burn down and the appliance is no longer hot enough to effectively heat the air moved by the blower. If the air coming from the blower feels cool, one should either decrease the blower speed or stoke the fire to build up more heat.

NOTE: Turn blower off before opening the door to load the fuel.

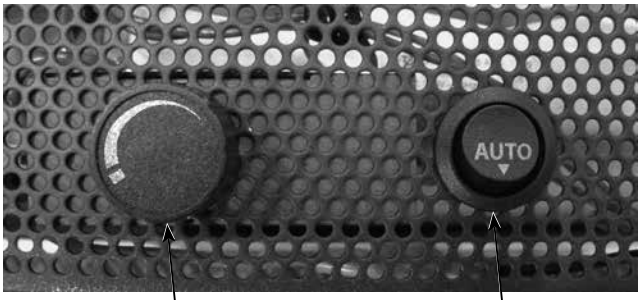

Figure 11 - Blower Controls

⚠ WARNING

The blower must be plugged directly into a properly grounded three-prong receptacle, 120 VAC, 60 Hz, single phase. Do not cut or remove the grounding prong from this plug. Do not route power cord under or in front of appliance.

Installation must be in accordance with National Electrical Code, ANSI/NFPA 70 - latest edition. In Canada, the current CSA C22.1 Canadian Electrical Code - latest edition.

DANGER: Disconnect power before servicing blower.

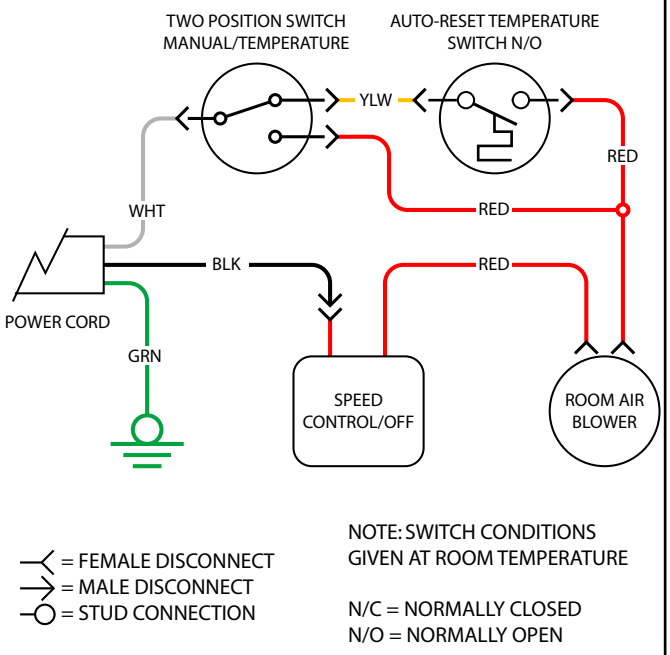

Figure 12 - Blower Wiring Schematic

OPERATING TECHNIQUES AND HINTS

Recent developments in wood-burning technology have made wood-burning a cleaner and more convenient way to heat your home. Overall efficiency in a wood-burning appliance is a combination of combustion efficiency and heat transfer efficiency. Whether heating your entire home, or just a room or two, your understanding of how to best operate your stove or insert will enhance its overall efficiency and performance. What this can mean to you is longer, cleaner burns, less wood use and more heat.

GETTING THE MOST OUT OF YOUR APPLIANCE

The following sections will outline techniques you can use to "get the most out of Your appliance." Please read them carefully.

MAXIMIZING YOUR APPLIANCE'S OVERALL EFFICIENCY

It is important to know that for high, combustion efficient, clean burns, you will need to have sufficient temperatures inside the firebox for thorough combustion. The best method for determining if you have sufficient temperatures is to watch the brick lining in your firebox. When you first light your stove or fireplace insert, the firebrick will turn a dark brown or black. After 20 to 30 minutes of a hot fire, most of the bricks should return to near their original light brown or yellow color. This means the firebrick have reached a high enough temperature for Your appliance to achieve high combustion efficiency.

Second and just as important, is achieving a high level of heat transfer efficiency. Slowing the rate of flow through the stove or insert enhances heat transfer, thus allowing more time for heat to be transferred into your home. To do this, be sure to thoroughly preheat Your appliance and then reduce the amount of primary air by closing the draft control (lower left) to about 1/2 to 3/4 open. This will decrease the excess oxygen in your flue, which carries heat up your chimney, but should still be enough air to allow the fireplace insert to produce its maximum heat output. (More air may produce a lightly greater amount of heat, but will greatly increase wood consumption). When the area being heated reaches a comfortable temperature, slow the burn rate by closing the control to further improve heat transfer.

To get the most out of Your appliance, you will need to combine good combustion efficiency with good heat transfer practices. The following are some tips on how to operate Your appliance to achieve the highest overall efficiency.

1. Thoroughly preheat Your appliance before slowing the burn rate by closing the draft control.
2. Measure the fireplace insert temperature at the hottest point on the fireplace insert top or face. Use this information to repeat burn rates.
3. Once preheated, add wood (if needed) and partially close the draft control (lower left).
4. Operate your stove or fireplace insert as much as possible in the low to medium burn ranges.
5. Do not lower the draft setting so low as to completely extinguish the flames in the firebox. Check for at least some small flames twenty minutes after setting the draft control.
6. Do not continually operate your stove or fireplace insert in the high (wide open) setting. This wastes wood by carrying a great deal of heat up the chimney and can damage your stove or fireplace insert and chimney.
7. Go outside and check your chimney. More than a very small amount of smoke indicates wasted heat, creosote build up and pollution.

ACHIEVING CLEAN, LONG BURNS

To achieve long burn times, after having thoroughly preheated the appliance, let the appliance top cool down to 275 to 400 degrees (on Elite inserts, locate thermometer on the face of the insert just above the door). Now load the firebox and set the draft control. At this point, you may need to burn the fireplace insert with the draft open for a few minutes to ignite the wood. All IHP stoves and fireplace inserts are EPA tested for emissions at low burn with the air control completely closed. Whether or not you should burn Your appliance with the air control completely closed will depend on the following factors.

- How you load your wood
- Your chimney type, height and draft
- Your wood type and its moisture content
- The temperature of the appliance or fireplace insert
- Which model stove or insert you have

Experiment with different loading configurations to achieve longer burns. Try loading the wood from side to side and nesting it in the ashes to prevent airflow under and around the wood. Fresh wood should be loaded to the back of the firebox or to the sides. Hot coals or half burned wood should be brought towards the front of the firebox. The way you load your wood can seriously affect burn times. If the new load does not ignite within a few minutes, try crisscrossing the load to allow more airflow around the fire, or try a slightly hotter fireplace insert temperature.

Determining the lowest setting for efficient low burns. This will require some experimentation on your part. Try closing the air control all the way with the fireplace insert temperature at 325 degrees to 350 degrees. If the flames are completely extinguished, open the air control halfway and then slowly close it until there is only a small amount of flame. It is important to check the fireplace insert about 20 minutes after setting the draft control as it takes this long for the fireplace insert temperature to stabilize. There should still be some small flames on or above the wood load.

Use 325 degrees as a starting point. You can try starting temperatures 25 degrees higher or lower to achieve desired burn times, start 25 degrees lower if the fireplace insert burns the wood too quickly or 25 degrees higher if there are no flames in the firebox for more than a few minutes after loading the wood. You may or may not need to burn the fireplace insert with the air control open for a few minutes prior to setting the draft for a low burn, this will depend on the factors mentioned above. **Be sure not to smolder a fire overnight. Check your chimney for large amounts of smoke as this indicates very poor combustion.**

It is important to realize that stove technology has changed. Stoves and fireplace inserts have changed a great deal in the last few years. This has led to substantial changes in the methods of operation in new stoves as compared to older stoves. In old stoves without full brick linings and ceramic insulation, the rule was "get the stove as hot as possible before setting the draft on low for overnight burns." On newer, high technology IHP stoves, this is not necessary. Although it is still important to have the stove hot enough to burn efficiently, it will require less preheating. Once you have determined your optimum operating temperatures for various burn rates, we believe you will find Your appliance an extremely convenient way to achieve your heating needs.

Do not reload the fireplace insert for long burns when the stainless secondary tubes or baffles are glowing red, or when the fireplace insert is uncomfortably hot to load. This indicates the fireplace insert is too hot to load for a long burn. Also, do not load wood for a long burn on a deep bed of hot coals. Try stirring the coals a few minutes before loading the fireplace insert for a low burn to allow some of the unburned coals time to burn.

MAINTENANCE

Have your product inspected at least once a year by a qualified service technician to ensure gaskets, air tubes, baffles, and venting are in good repair to ensure proper performance. Have degraded items replaced by a qualified service technician.

THIS WOOD HEATER NEEDS PERIODIC INSPECTION AND REPAIR FOR PROPER OPERATION. IT IS AGAINST FEDERAL REGULATIONS TO OPERATE THIS WOOD HEATER IN A MANNER INCONSISTENT WITH OPERATING INSTRUCTIONS IN THIS MANUAL.

DOOR HINGES: If door hinges need lubricating, use an anti-seize compound (never use oil) available from your IHP dealer.

DOOR LATCH: If your door latch fails to latch tightly and the gasket is in good condition, place a length of pipe (cheater bar) over the inside portion of the door handle and bend slightly toward the door until the proper adjustment is obtained. If the door handle does not close easily, apply high temperature anti-seize to the striker.

DOOR GASKET: Periodically check gasket to make sure it is not over-compressed. If compressed, replace with a special woven door rope. (Don't try substituting rope, only use special IHP door rope).

PLATED ACCESSORIES: Clean only with a household type glass cleaner and a very soft cotton cloth. Other products may damage plated finish, paint and gaskets.

BAFFLE BLANKET: Your baffle blanket should be inspected during every chimney cleaning. If the blanket is compressed or heavily stained, it should be replaced. Heavy creosote stains or matting is an indication of improper use and your burning habits should be reviewed.

GLASS CLEANING: Only clean glass with products specifically made to use on wood stoves. Other products could damage gaskets and paint. Never scrape glass with a razor blade. This can pit the glass and make it impossible to clean in the future.

WINDOW GASKET: The window gasket can be checked by running the flame of a match near the gasket and around the door. If the flame is drawn in around the window, the gasket should be replaced.

DOOR HANDLE: Door handle may become tight as you use the fireplace insert. Free the handle up by using dry graphite supplied with the fireplace insert. The directions are included with the graphite.

⚠ WARNING

Inspect and clean chimney and connector frequently. Under certain conditions of use, creosote buildup may occur rapidly. See *Installing the Insert* on *Page 13* for instructions on removing the appliance for cleaning (reverse order of instructions).

GLASS CLEANING GUIDELINES

WARNING: DO NOT CLEAN GLASS WHEN APPLIANCE IS HOT!

Glass on any wood stove or fireplace insert will not stay perfectly clean. Here are some guidelines for cleaning and caring for the glass:

- Ensure the appliance is cold prior to cleaning glass.
- This appliance is designed to provide a flow of air over the inside of the glass, where along with high heat helps inhibit build-up on the glass. When build-up occurs, a commercial glass cleaner designed for stoves is recommended. Regular household glass cleaners will not clean creosote.
- Do not use abrasives such as steel pads, steel wool or oven cleaner as they will scratch the glass. Never scrape glass with a razor blade as this may pit the glass and make it impossible to clean in the future.
- Do not use chemical glass cleaners as they may damage the gaskets or painted surfaces.

TIPS FOR KEEPING THE GLASS CLEAN

- Burn only dry seasoned cord wood. Wet wood = Dirty glass.
- A short, hot fire (15 - 20 minutes) may help to clean off some of the normal buildup. Lower burns = more build-up. Higher burns = less build-up.
- Keep freshly loaded wood away from the glass.
- After reloading, allow all the wood to catch flame before dampering down the appliance.

⚠ CAUTION

Cleaning Glass: Ensure appliance is cold prior to cleaning glass. A commercial glass cleaner designed for stoves is recommended. Do not use abrasive cleaners. Do not clean with any materials, which may scratch or otherwise damage the glass. Scratches on the glass can develop into cracks or break. Inspect the glass regularly. If you detect a crack, extinguish the fire and contact your dealer for a replacement.

GLASS REPLACEMENT INSTRUCTIONS

Step 1. **Remove Door Assembly** - Open door to remove E clip from the upper hinge pin. Remove upper hinge pin by pulling up while holding the opposite side of the door. Lift door out of the lower hinge pin and place face down on a soft surface.

Step 2. **Remove Door Back Screws (6 ea.)** - Using a 5/32" allen wrench remove the 6 retainer screws from the faceplate. To locate screws, peel back the door gasket as necessary.

Step 3. **Disassemble Door Assembly** - Flip door assembly over to be face up. Separate faceplate from door back by pulling up on faceplate.

Step 4. **Remove Glass** - Carefully remove broken glass one piece at a time (protective gloves are recommended)

Step 5. **Install New Glass Assembly** - Install the new glass with gasket in recess on door back (use only factory supplied 5mm ceramic glass. Do not substitute).

Step 6. **Reinstall Faceplate and Screws** - Reinstall faceplate onto door back and while holding the door assembly together flip the assembly back onto it's face. Carefully reinstall the screws. Be very careful not to overtighten the screws (this could result in glass breakage when the appliance is hot) and it is highly recommended to use anti seize on the screws.

Step 7. **Reinstall Door** - Set door assembly back into the lower hinge mount while holding the handle side of the door up. Place the upper hinge pin back in the mount and door assembly. Reinstall the E clip that was removed.

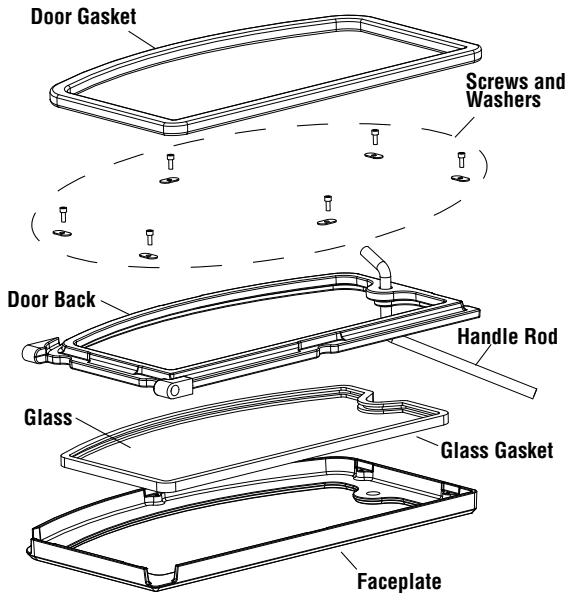

Figure 13

TROUBLESHOOTING

Problem	Solution
POOR DRAFT:	Extend chimney in length or have the chimney realigned to the proper size flue. Oversized chimneys normally have poor drafts. Remember, the appliances' draft depends solely on the natural draft of the chimney (See Draft Requirements on ***Page 4***). If your stove or fireplace insert is not drafting properly, your chimney is the problem. All stoves and inserts are thoroughly tested to ensure proper draft with the correct size chimney flue.
EXCESSIVE DRAFT:	With better chimneys being more common, excessive draft can be an issue. Alleviate excessive draft by slowing the burn rate of the appliance once it has reached proper operating temperature (See Maximizing Your appliances Overall Efficiency on ***Page 16***).
DIRTY GLASS:	1) Burn smaller, hotter fires and check to make sure you are not setting the draft down too far with the draft control. 2) Make sure your wood is well-seasoned and dry (not open to rain - see Creosote and Fuel sections on ***Pages 5-6***). 3) See Poor Draft section (above) and Clean Glass (above).
SMOKES WHEN DOOR IS OPEN:	1) If smoke is entering the room, check to make sure your baffle boards are properly installed and that the baffle blanket is pushed back flush with the front of the baffle boards. 2) Check the chimney for blockage due to creosote (See Creosote section on ***Page 5***). 3) Check draft (See POOR DRAFT section above).
WOOD BURNS TOO FAST:	1) The draft control must be closed further. 2) Add fuel at lower firebox temperatures. 3) Load wood side to side and reduce the flow of air under wood. 4) The door seal may need replacing, check for leakage. 5) See "Excessive Draft."
POOR HEAT OUTPUT:	1) Check your wood. Wet, moist, unseasoned wood will not produce heat. 2) Your stove or fireplace insert needs to be seasoned (moisture removed from the steel and brick). Continue to burn a fire. It normally takes from one to three weeks of burning to season your stove or fireplace insert (See Burn-In Period on ***Page 6***). 3) See Excessive Draft section above.
PAINT GIVES OFF ODOR (smoke):	Paint is tempering-in. Burn only moderately hot for the first few days until paint is fully cured. Then burn a very hot fire to cure any paint that may not easily cure. Open windows or door to ventilate (See Burn-In Period on ***Page 6***).

DO'S AND DON'TS

DO NOT: Install or operate the appliance before reading this manual.

DO NOT: Close the draft beyond the point at which the flames are completely extinguished.

DO NOT: Open the appliance door without fully opening the draft first.

DO NOT: Burn driftwood or wood that has been in salt water. This includes some mill ends and scrap lumber that has been floated in salt water on the way to the mill. (This will void your warranty).

DO NOT: Handle the plated faceplate unnecessarily. Use the door handle only.

DO NOT: Force oversized logs into the firebox as this may dislodge the baffle assembly.

DO NOT: Close the door tightly during Burn-In period.

DO: Be sure to clean any fingerprints from optional accessories that have plated surfaces before burning the appliance. Clean the plated surfaces only with household type glass cleaner and a very soft cloth.

DO: Consult local building department if other than recommended clearances are desired.

DO: Read instructions for the baffle boards and baffle blanket occasionally to ensure you have not bumped or moved them out of place when loading wood.

DO: Check the chimney and baffle monthly to make sure they are clean.

DO: Burn seasoned, dry wood only! (RAIN = WET WOOD)

DO: Open the door frequently during Burn-In period to keep gasket from adhering to the curing paint.

DO: Enjoy the warm feeling of your new IHP appliance.

Smoke Detector Recommended

Since there are always several potential sources of fire in any home, we recommend installing smoke detectors. If possible, install the smoke detector in a hallway adjacent to the room (to reduce the possibility of occasional false activation from the heat produced by these appliances). If your local code requires a smoke detector be installed within the same room, you must follow the requirements of your local code. Check with your local building department for requirements in your area.

Carbon Monoxide Monitor Recommended

Carbon Monoxide Poisoning: Early signs of carbon monoxide poisoning are similar to the flu with headaches, dizziness and/or nausea. If you have these signs, obtain fresh air immediately. Some people are more affected by carbon monoxide than others, including pregnant women, people with heart or lung disease or anemia, those under the influence of alcohol, and those at high altitudes.

It is against federal regulations to operate wood heaters in a manner inconsistent with operating instructions in the manual.

PROHIBITED FUELS

This heater is designed to burn natural wood only. Higher efficiencies and lower emissions generally result when burning air dried seasoned hardwoods, as compared to softwoods or to green or freshly cut hardwoods. DO NOT BURN:

- Garbage;
- Lawn clippings or yard waste;
- Materials containing rubber, including tires;
- Materials containing plastic;
- Waste petroleum products, paints or paint thinners, or asphalt products;
- Materials containing asbestos;
- Construction or demolition debris;
- Railroad ties or pressure-treated wood;
- Manure or animal remains;
- Salt water driftwood or other previously salt water saturated materials;
- Unseasoned wood;
- Christmas tree branches;
- Paper products, colored paper, cardboard, plywood, or particleboard;
- gasoline;
- naphtha;
- engine oil;
- flammable liquids;
- solvents;
- grease; or
- coal

The prohibition against burning these materials does not prohibit the use of fire starters made from paper, cardboard, saw dust, wax and similar substances for the purpose of starting a fire in an affected wood heater.

Burning these materials may result in release of toxic fumes or render the heater ineffective and cause smoke. Intense firing with these materials may overheat the fireplace, causing damage to the unit, a fire or even possibly igniting a chimney fire if the chimney is creosoted. Burning unapproved fuel, resulting in excessive pollutants being emitted, may be prohibited and subject to a fine or other penalty by the authority having jurisdiction in your area.

REPLACEMENT PARTS - MODELS C160TGL AND C160AGL

Contact an IHP dealer to obtain any of these parts. Never use substitute materials. Use of non-approved parts can result in poor performance and safety hazards.

FRONT DOOR PARTS LIST		
Item #	Cat. No	Description
1	H5639	Door Rope Kit, 7/8" Dia. (6' 2")
2	H5629	Upper Hinge Pin
3	H5625	Upper Hinge Pin E-Clip
4	H5628	Lower Hinge Pin
5	H5646	Lower Hinge Pin Copper Washer
6	H5640	Glass Gasket Kit (8' 4")
7	H5577	Set of 6 screws and 6 washers for door assembly
8	H5654	Spring Handle / Nickel
	H5653	Spring Handle / Gold
9	71067	Traditional Door Glass / Plain
10	71057	Traditional Door Faceplate / Black
	71058	Traditional Door Faceplate / Gold
	71059	Traditional Door Faceplate / Nickel
	71148	Traditional Door Faceplate / Brushed Gold
	71145	Traditional Door Faceplate / Brushed Nickel
11	71072	Arch Door Glass / Plain
12	71060	Arch Door Faceplate / Black
	71061	Arch Door Faceplate / Gold
	71062	Arch Door Faceplate / Nickel
	71147	Arch Door Faceplate / Brushed Gold
	71144	Arch Door Faceplate / Brushed Nickel
13	H5579	Traditional Door Back w/ Handle (door gasket included)
14	H5578	Arch Door Back w/ Handle (door gasket included)

USB BLOWER PARTS		
Item #	Cat. No	Description
15	H8067	UHPII Wiring Harness
16	H5655	UHPI & UHPII Blower Speed Control
17	H8068	Snap Switch Bracket w/ hardware
18	H8082	Replacement Power Cord
19	H8074	UHPII Blower Cage-Snap Switch/ Black
	H8075	UHPII Blower Cage-Snap Switch/ Gold
	H8076	UHPII Blower Cage-Snap Switch/ Nickel
	H8077	UHPII Blower Cage-Snap Switch/ Brushed Gold
	H8078	UHPII Blower Cage-Snap Switch/ Brushed Nickel
29	H8064	Snap Switch w/ Gasket and Screws
32	H8066	Control Switch (Manual, Off, Automatic)
C160TGL AND C160AGL INSERT PARTS		
33	71138	Small Flange Screw/ Black - Seven Needed
	71128	Small Flange Screw/ Nickel - Seven Needed
34	F1871	IronStrike® Nameplate Kit w/ Hardware - Nickel
35	H5650	Draft Rod Knob
36	H5647	Tinnerman Nuts for Flange Installation - Seven Needed
37	H5645	Side Leveling Bolts - Two Included
38	H5644	Blower Mounting Bolts - Two Needed
39	H5612	Firebrick 4-1/2" x 9" (10 per appliance)
40	H5576	Firebrick 4-1/4" x 9" (2 per appliance)
41	H5607	Firebrick 2-1/4" x 9" (3 per appliance)
42	H3095	Firebrick 2-1/4" x 8-7/8" (1 per appliance)
43	H5604	Firebrick 1-1/2" x 9" (1 per appliance)
44	H5597	Firebrick 1-1/2" x 8-7/8" (1 per appliance)
45	H3104	Front Baffle/Secondary Burn Tube Assembly
46	H3105	Middle/Rear Baffle/Secondary Burn Tube Assembly
47	H3103	Complete Baffle/Secondary Burn Tube Assembly (includes tubes and all mounting hardware)
48	H8017	Baffle Blanket 20" x 11" x 1"
49	H8016	Baffle Board Kit w/ Baffle Blanket
MISCELLANEOUS PARTS		
---	71052	Dry Graphite (Apply to door handle and door hinges)
---	H5633	Anti Seize 2 gram pouch

REPLACEMENT PARTS - MODELS C160TGL AND C160AGL

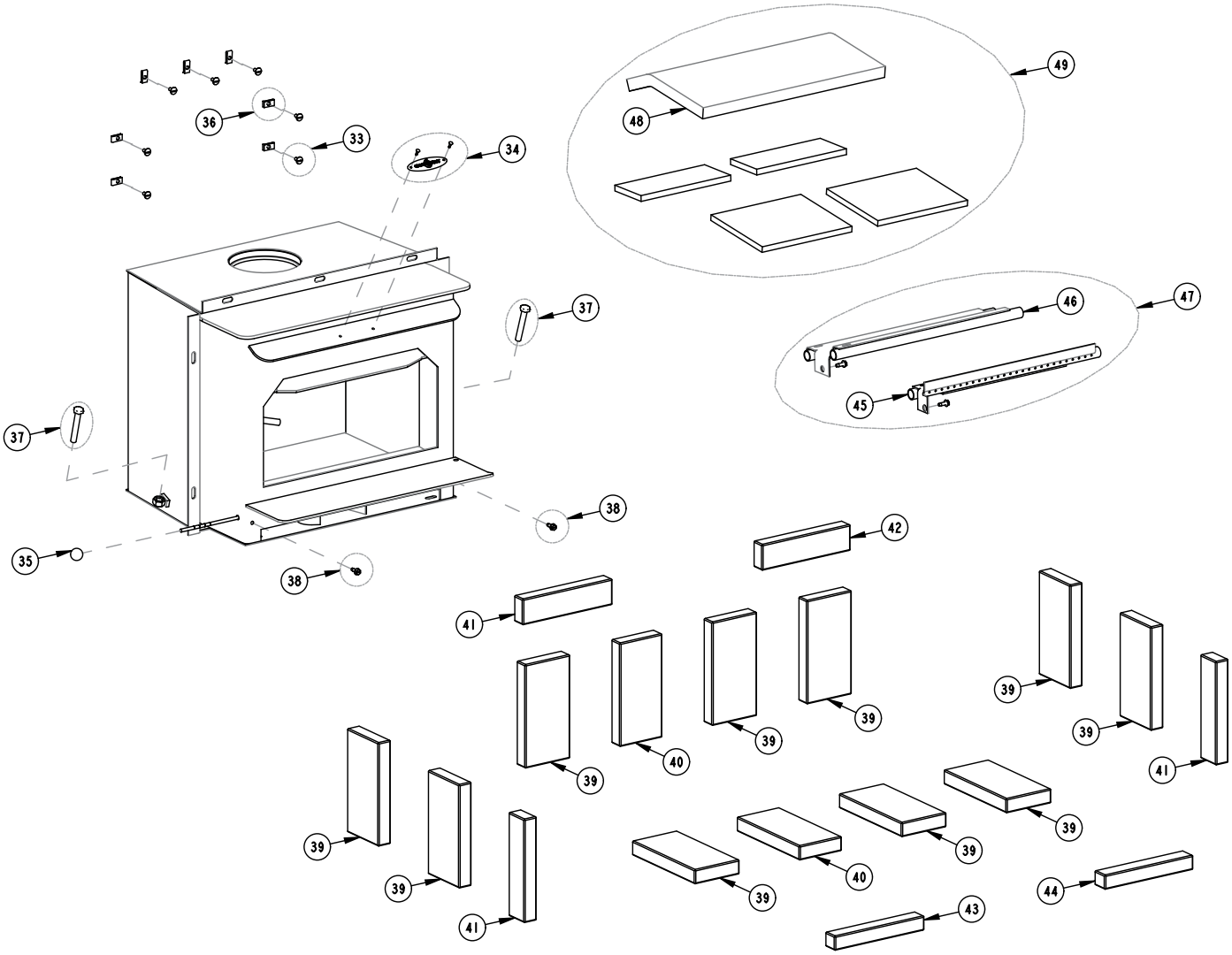

NOTE: DIAGRAMS & ILLUSTRATIONS ARE NOT TO SCALE.

REPLACEMENT PARTS - MODELS C160TGL AND C160AGL

Door Parts

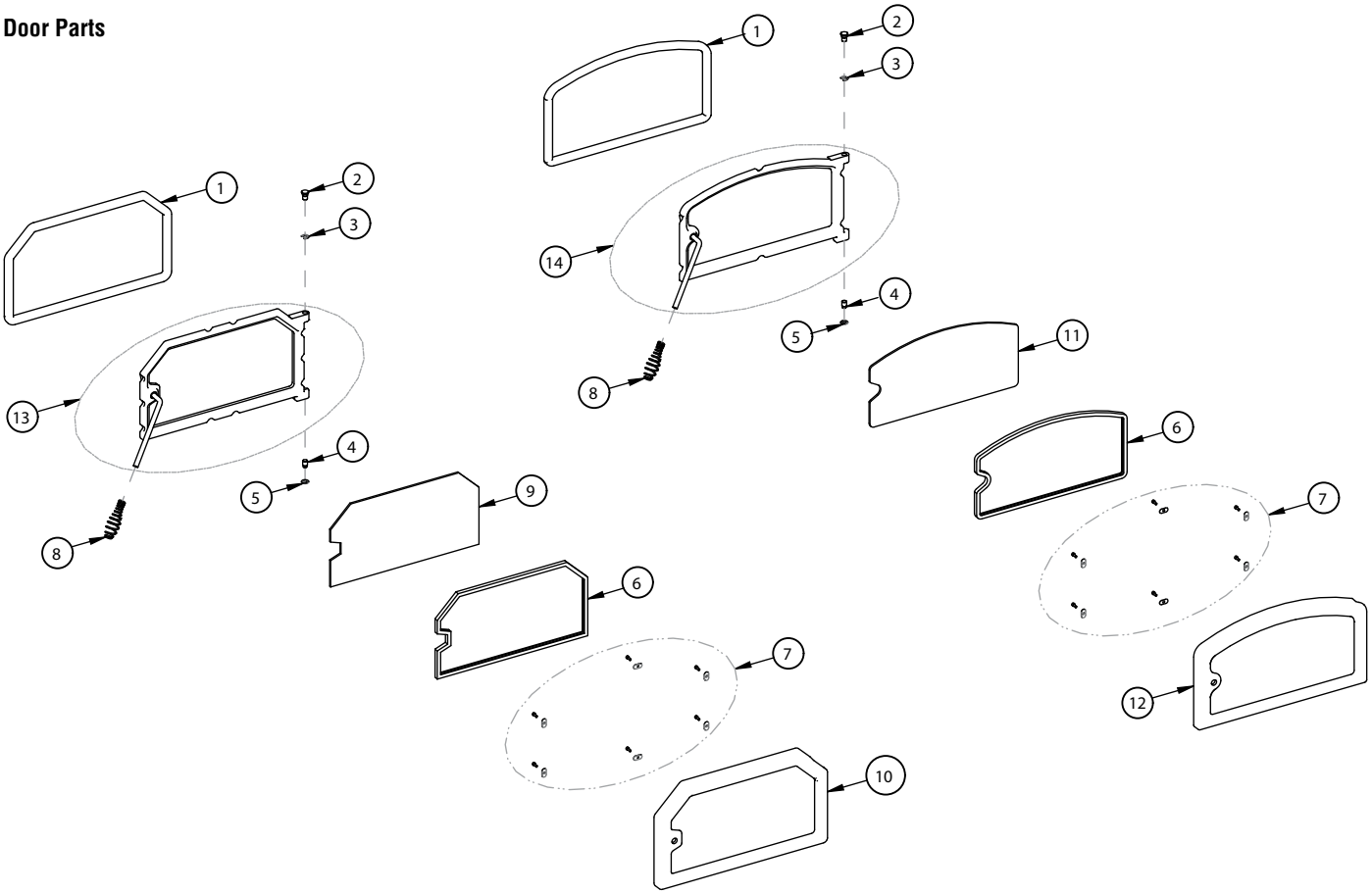

Blower Parts

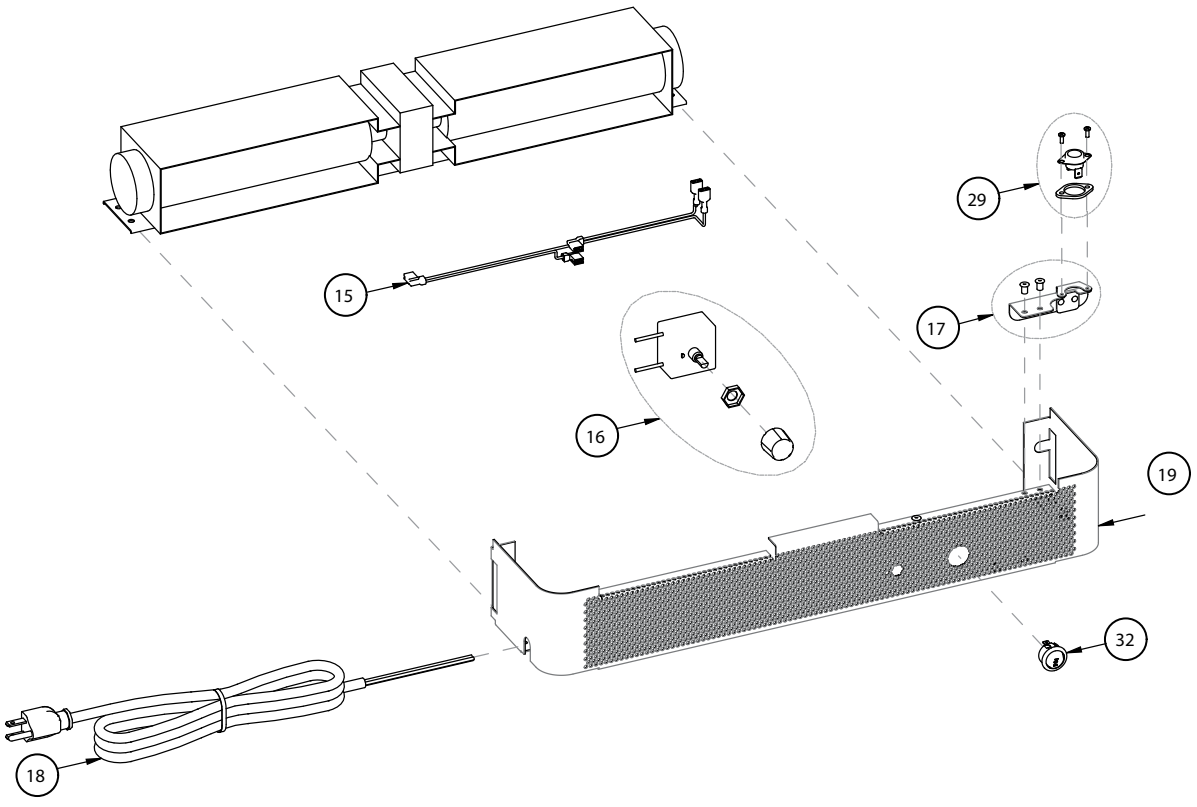

NOTE: DIAGRAMS & ILLUSTRATIONS ARE NOT TO SCALE.

ACCESSORIES - MODELS C160TGL AND C160AGL

PRODUCT REFERENCE INFORMATION			
Cat. No.	Description	Ship. Weight	Ship. Volume
H7889	C160TGL, Fireplace Insert / Traditional Black Door / Nickel Nameplate	319 lb.	17.76 cu. ft.
H7890	C160AGL, Fireplace Insert/Arch Black Door/ Nickel Nameplate	325 lb.	18.30 cu. ft.

SURROUND PANELS / TOP AND SIDES (REQUIRED)		
Cat. No.	Model	Description
		26-1/2" x 40":
71042	WFPT0740-S	Top Surround 7-1/2" x 40"
71035	WFPS0819	Side Surrounds 8-3/8" x 19"
		26-1/2" x 48":
71043	WFPT0748-S	Top Surround 7-1/2" x 48"
71036	WFPS1219	Side Surrounds 12-3/8" x 19"
		30-1/2" x 40":
71044	WFPT1140-S	Top Surround 11-1/2" x 40"
71035	WFPS0819	Side Surrounds 8-3/8" x 19"
		30-1/2" x 48":
71045	WFPT1148-S	Top Surround 11-1/2" x 48"
71036	WFPS1219	Side Surrounds 12-3/8" x 19"
SURROUND TRIM - THESE ARE NOT REQUIRED BUT AN OPTION		
71021	WFT2640-B	Black 26-3/4" x 40"
71022	WFT2648-B	Black 26-3/4" x 48"
71025	WFT3040-B	Black 30-3/4" x 40"
71026	WFT3048-B	Black 30-3/4" x 48"
71074	WFT2640-N	Nickel 26-3/4" x 40"
71075	WFT2648-N	Nickel 26-3/4" x 48"
71078	WFT3040-N	Nickel 30-3/4" x 40"
71079	WFT2948-N	Nickel 30-3/4" x 48"

BLOWERS		
Cat. No.	Model	Description
H7907	WSINS-BLWR-B-SS	Blower Insert Black
H7909	WSINS-BLWR-N-SS	Blower Insert Nickle
H7910	WSINS-BLWR-BN-SS	Blower Insert Brushed Nickel
ETCHED GLASS		
71073	Glass Arch Sailboat	Arch / Sailboat
71069	Glass Arch Cattail	Arch / Cattail
71070	Glass Arch Evergreen	Arch / Evergreen
71068	Glass Trad Sm Sailboat	Tradition / Sailboat
71063	Glass Trad Sm Cattail	Tradition / Cattail
71065	Glass Trad Sm Evergreen	Tradition / Evergreen
71066	Glass Trad Sm Floral	Tradition / Floral
MISC.		
71054	Paint Nickel (1/2 Pint)	Paint Nickel (1/2 pint)
H8159	TSPK-B	Touch-Up Paint , Metallic Black, 12 oz. Aerosol
71129	FRNT-SPPT	Front Support (0-8") *(ref. form #775305M)*
71161	WINS-6FC	6" Positive Flue Connector Ring Kit
H6832	OFFADJFLUEBX6SM	Adjustable Offset Flue Box 6" Flue to 6" Exhaust (0-6")
H6833	OFFADJFLUEBX6LG	Adjustable Offset Flue Box 6" Flue to 6" Exhaust (6-12")

SAFETY / LISTING LABEL - MODELS C160TGL AND C160AGL

CONTACT YOUR LOCAL BUILDING OR FIRE OFFICIALS ABOUT RESTRICTIONS AND INSTALLATION INSPECTION IN YOUR AREA
COMMUNIQUEZ AVEC LES AUTORITÉS LOCALES EN BÂTIMENT OU LE SERVICE DE PRÉVENTION DES INCENDIES POUR CONNAÎTRE LES NORMES D'INSTALLATION ET D'INSPECTION DE VOTRE RÉGION

Listed Factory-built or Masonry Fireplace Accessory/Insert / Poêle encastrable certifié pour installation dans un foyer de maçonnerie ou préfabriqué

IRONSTRIKE HEAT FOR LIFE

Manufactured By / Fabriqué Par:
INNOVATIVE HEARTH PRODUCTS
1502 14th Street NW
Auburn, WA 98001 USA

PFS C US

"PREVENT HOUSE FIRES"
Install and use only in accordance with manufacturer's installation instructions and your local building codes. Do not connect this unit to a chimney flue serving another appliance.

Optional Blower, Part No.s: H7907 (black), H7909 (nickel), H7910 (brushed nickel)
Blower Electrical Rating: 120V, 60 Hz, 1 Amp
Do not route power cord under or in front of appliance.

Report No./Numéro de Rapport: 14-186

Serial No. / Numéro de série: **C160GL-**

Model / Modèle: C160TGL ■
C160AGL ■

Tested to/Testé selon: UL 1482, ULC S628
Type Of Fuel: Solid Wood Only

This wood heater needs periodic inspection and repair for proper operation. Consult the owner's manual for further information. It is against federal regulations to operate this wood heater in a manner inconsistent with the operating instructions in the owner's manual.
Certification test emission value 2.1 grams/hr per 2020 cordwood standard

Minimum Clearance to Combustible Materials - Inches (millimeters)

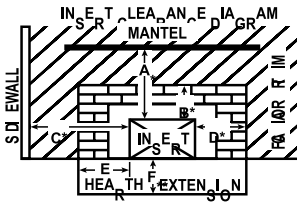

(A) Clearance from Insert top to Mantel = USA-24", CAN-26" (660mm). Maximum mantel depth = 9"
(B) Clearance from insert top to combustible = USA -15" CAN-18" (450mm)
(C) Minimum clearance to combustible sidewall = 20" (508mm)
(D) Minimum clearance to combustible side trim = 12" (305mm)
(E) Minimum distance of floor protection to the side = 8" (200mm). This is measured from the sides of the door opening in the USA and from the sides of the insert in Canada.
(F) Minimum distance from front of insert to combustible = 18" (450mm).

The hearth and/or floor protection must be a thermally rated non-combustible hearth/floor protector meeting or exceeding a thermal rating of k=.84 or equivalent with a listed thickness of 3/8" (9.5mm) minimum in USA (3/4" - 19mm minimum in Canada). Install only in a masonry fireplace, built to UBC Chapter 37 or approved factory-built fireplace (see owner's manual). Do not remove brick or mortar from masonry fireplace to accommodate insert. Use flue outlet with or without a direct connector. Approved with minimum 6" (152mm) diameter stainless steel listed reline system. Remove and clean behind unit frequently, as creosote build up may occur rapidly. See owner's manual for reductions on mantel, trim and floor protection.
* Reduced clearances may be available for A, B, C, and D dimensions by using optional mantel and/or side shields. Consult with your Innovative Hearth Products dealer for the dimensions of the shields.
** Hearth extension reductions: 2" (51mm) reduction for 2" (51mm) raised hearth. 16" (406mm) minimum hearth extension on all inserts as measured from the door opening of the unit.

CAUTION: HOT WHILE IN OPERATION. DO NOT TOUCH. KEEP CHILDREN, CLOTHING, FURNISHINGS AND COMBUSTIBLE MATERIAL A CONSIDERABLE DISTANCE AWAY. CONTACT MAY CAUSE SKIN BURNS. SEE NAMEPLATE AND INSTRUCTIONS. DO NOT OVERFIRE. IF HEATER OR CHIMNEY CONNECTOR GLOWS, YOU ARE OVERFIRING. INSPECT AND CLEAN CHIMNEY AND CONNECTOR FREQUENTLY. UNDER CERTAIN CONDITIONS OF USE, CREOSOTE BUILDUP MAY OCCUR RAPIDLY. DO NOT USE GRATE OR ELEVATE FIRE - BUILD WOOD FIRE DIRECTLY ON HEARTH. FEED DOOR MUST BE CLOSED DURING FIRING EXCEPT WHEN ADDING FUEL. KEEP ASH DOOR CLOSED TO AVOID EXCESS HEAT. DANGER: RISK OF ELECTRICAL SHOCK. DISCONNECT POWER BEFORE SERVICING UNIT. TYPE OF FUEL: SOLID WOOD ONLY.

Date of Manufacture / Date De Fabrication

2018	2019	2020	JAN. JANV	FEB. FEVR	MAR. MARS	APR AVR	MAY MAI	JUN JUIN	JUL JUIL	AUG AOÛT	SEP SEPT	OCT OCT	NOV NOV	DEC DEC

U.S. ENVIRONMENTAL PROTECTION AGENCY
Certified to comply with 2020 cordwood standard.

Part No./ No. pièce #900902-00 Rev. 0, 08/2018 DO NOT REMOVE THIS LABEL Made in U.S.A.

"PREVENTION DES INCENDIES"
Installer et utiliser l'appareil en conformité avec les directives d'installation du fabricant et des autorités locales en bâtiment ou le service de prévention des incendies. Ne pas brancher cette unité à un conduit de fumée raccordé à un autre appareil.

Ventilateur Optionnel, No. De Pièces: H7907 (noir), H7909 (plaqué nickel), H7910 (plaqué nickel, fini brossé)
Spécification Électrique Du Ventilateur: 120V, 60 Hz, 1 Amp

Ne pas faire passer le fil électrique sous ou en avant de l'appareil

Type de combustible: Bois seulement

Cet appareil de chauffage au bois doit être inspecté et entretenu périodiquement pour fonctionner correctement. Voir le manuel du propriétaire pour plus d'information. L'utilisation de cet appareil de chauffage au bois de manière incompatible avec les instructions du manuel du propriétaire constitue une infraction aux régulations fédérales.
Valeur d'émission du test d'homologation 2,1 g/h selon la norme 2020

Dégagements Minimums Aux Matériaux Combustibles - En Pouces (millimètres)

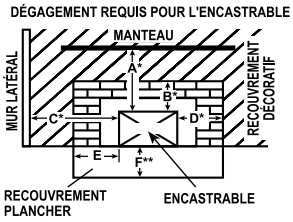

(A) Espace entre l'encastrable et le manteau de cheminée = USA-24", CAN-26" (660mm). Profondeur maximum de la tablette du manteau de cheminée 9"
(B) Espace entre l'encastrable et les matériaux combustibles du haut = USA -15" CAN-18" (450mm)
(C) Espace minimum entre l'encastrable et le mur de côté combustible = 20" (508mm)
(D) Espace minimum entre l'encastrable et les matériaux combustibles du côté = 12" (305mm)
(E) Minimum requis de matériel non combustible au plancher, de chaque côté de l'ouverture de l'appareil = 8" (200mm)
(F) Minimum requis de matériel non combustible à l'avant de l'appareil = 18" (450mm)

Installer seulement dans un foyer de maçonnerie construit selon UBC Chapitre 37 ou dans un foyer approuvé par le fabricant (référez-vous au manuel). Ne pas enlever de ciment ou de briques pour installer l'encastrable. L'installation de la cheminée peut s'effectuer avec ou sans connecteur à la sortie de l'appareil. Approuvé pour raccordement avec un conduit de tubage certifié en acier inoxydable de 6" (152mm) de diamètre. Tirer l'appareil et nettoyer l'arrière fréquemment car le créosote peut s'y accumuler rapidement.
*Les dégagements minimums peuvent être réduits pour A, B, C, D en utilisant un manteau optionnel et / ou des protecteurs latéraux. Contacter votre détaillant Innovative Hearth Products pour la dimension des protecteurs requise.
**Réduction du recouvrement de plancher : 2" (51mm) de moins si l'encastrable est élevé de 2" (51mm). Respecter 16" (406mm) de recouvrement de plancher minimum à l'avant de l'encastrable.

ATTENTION: L'APPAREIL EST CHAUD LORS DE L'OPÉRATION. NE PAS Y TOUCHER. RISQUE DE BRÛLURES CUTANÉES. TENIR LES ENFANTS, LES MATÉRIAUX COMBUSTIBLES, LES VÊTEMENTS ET LES MEUBLES ELOIGNÉS DE L'APPAREIL. VOIR LA PLAQUE SIGNALÉTIQUE ET LES DIRECTIVES. NE PAS SURCHAUFFER L'APPAREIL. SI L'APPAREIL OU LE TUYAU DE CHEMINÉE ROUGIT, VOUS SURCHAUFFEZ. INSPECTER ET NETTOYER LA CHEMINÉE ET LE TUYAU CONNECTEUR FRÉQUEMMENT. SOUS CERTAINES CONDITIONS, IL SE PEUT QUE LE CRÉOSOTE S'ACCUMULE RAPIDEMENT. NE SURÉLEVER PAS LE FEU À L'AIDE D'UN CHENET. DÉPOSER LES BÛCHES DE BOIS DIRECTEMENT SUR L'ÂTRE. LA PORTE DOIT ÊTRE FERMÉE PENDANT L'USAGE SAUF POUR ALIMENTER LE FEU. GARDER LA PORTE "BY-PASS" (CENDRES) FERMÉE POUR ÉVITER DE SURCHAUFFER.

DANGER: RISQUES DE DÉCHARGE ÉLECTRIQUE. DÉCONNECTER LE FIL ÉLECTRIQUE DE LA PRISE DE CONTACT AVANT LE SERVICE. NE PAS FAIRE PASSER LE FIL ÉLECTRIQUE SOUS OU EN AVANT DE L'APPAREIL.

TYPE DE COMBUSTIBLE: BOIS SEULEMENT

NE PAS ENLEVER OU RECOUVRIR CETTE ÉTIQUETTE Fabriqué aux U.S.A.

NOTE: DIAGRAMS & ILLUSTRATIONS ARE NOT TO SCALE.

NOTE: DIAGRAMS & ILLUSTRATIONS ARE NOT TO SCALE.

Innovative Hearth Products
IronStrike® Brand Wood Burning Stove and Insert
Limited Lifetime Warranty

THE WARRANTY
Innovative Hearth Products ("IHP") Limited Lifetime Warranty warrants your IronStrike® Brand Wood Burning Stove or Insert ("Product") to be free from defects in materials and workmanship at the time of manufacture. The Product body, firebox and ceramic glass carry the Limited Lifetime Warranty. Ceramic glass carries the Limited Lifetime Warranty against thermal breakage only. After installation, if covered components manufactured by IHP are found to be defective in materials or workmanship during the Limited Lifetime Warranty period and while the Product remains at the site of the original installation, IHP will, at its option, repair or replace the covered components. If repair or replacement is not commercially practical, IHP will, at its option, refund the purchase price or wholesale price of the IHP product, whichever is applicable. IHP will also pay IHP prevailing labor rates, as determined in its sole discretion, incurred in repairing or replacing such components for up to five years. THERE ARE EXCLUSIONS AND LIMITATIONS to this Limited Lifetime Warranty as described herein.

COVERAGE COMMENCEMENT DATE
Warranty coverage begins on the date of purchase. In the case of new home construction, warranty coverage begins on the date of first occupancy of the dwelling or six months after the sale of the Product by an independent IHP dealer/distributor, whichever occurs earlier. The warranty shall commence no later than 24 months following the date of product shipment from IHP, regardless of the installation or occupancy date.

EXCLUSIONS AND LIMITATIONS
This Limited Lifetime Warranty applies only if the Product is installed in the United States or Canada and only if operated and maintained in accordance with the printed instructions accompanying the Product and in compliance with all applicable installation and building codes and good trade practices.

This warranty is non-transferable and extends to the original owner only. The Product must be purchased through a listed supplier of IHP and proof of purchase must be provided. The Product body and firebox carry the Limited Lifetime Warranty from the date of installation. Vent components, trim components and paint are excluded from this Limited Lifetime Warranty. The following do not carry a Limited Lifetime Warranty but are warranted as follows:

Cast Iron Heat Exchanger – Replacement for five years from the date of installation
Cast iron parts – Replacement for one year from the date of installation
Catalyst – Carries a separate warranty. Refer to the warranty certificate provided for that part
Electrical components – Repair or replacement for one year from date of installation
Gaskets – Replacement for one year from the date of installation.
Gold & nickel plating – Replacement for two years from date of installation. Excludes tarnishing
Refractory & screens – Replacement for two years from date of installation. Excludes hairline cracks
Removable air tubes – Repair or replacement for seven years from date of installation. IHP prevailing labor rates for years one through five.
Labor coverage – Prevailing IHP labor rates apply for the warranty period of the component, unless otherwise noted

Parts not otherwise listed carry a 90 day warranty from the date of installation.

Whenever practicable, IHP will provide replacement parts, if available, for a period of 10 years from the last date of manufacture of the Product.

IHP will not be responsible for: (a) damages caused by normal wear and tear, accident, riot, fire, flood or acts of God; (b) damages caused by abuse, negligence, misuse, or unauthorized alteration or repair of the Product affecting its stability or performance. (The Product must be subject to normal use with approved fuels listed in the Operation Manual provided with the product. Fuel products with abnormal burning characteristics, including but not limited to fuel such as driftwood, coal or plywood and wood products using a binder may burn at excessive temperatures and may cause damage to the Product or may cause it to function improperly; IHP stoves, inserts and high efficiency EPA fireplaces are approved for burning dry seasoned wood only.); (c) damages caused by failing to provide proper maintenance and service in accordance with the instructions provided with the Product; (d) damages, repairs or inefficiency resulting from faulty installation or application of the Product.

Coverage of this Limited Lifetime Warranty is conditional upon the appliance being operated without the use of grates, irons or any other method to elevate the fire.

IHP is not responsible for inadequate system draft caused by air conditioning and heating systems, mechanical ventilation systems, or general construction conditions which may generate negative air pressure in the room in which the appliance is installed. Additionally IHP assumes no responsibility for smoking conditions caused by inadequate chimney height, adjoining trees or buildings, adverse wind conditions or unusual environmental factors and conditions. Certain IHP Products are listed for use with Security Chimneys International, Ltd. chimney systems only. Use of chimney components other than that specified in the Product manual will void the Product warranty.

This Limited Lifetime Warranty covers only parts and labor as provided herein. In no case shall IHP be responsible for materials, components or construction which are not manufactured or supplied by IHP or for the labor necessary to install, repair or remove such materials, components or construction. Additional utility bills incurred due to any malfunction or defect in equipment are not covered by this Limited Lifetime Warranty. All replacement or repair components will be shipped F.O.B. from the nearest stocking IHP factory.

LIMITATION ON LIABILITY
It is expressly agreed and understood that IHP's sole obligation and the purchaser's exclusive remedy under this warranty, under any other warranty, expressed or implied, or in contract, tort or otherwise, shall be limited to replacement, repair, or refund, as specified herein.

In no event shall IHP be liable for any incidental or consequential damages caused by defects in the Product, whether such damage occurs or is discovered before or after replacement or repair, and whether such damage is caused by IHP's negligence. IHP has not made and does not make any representation or warranty of fitness for a particular use or purpose, and there is no implied condition of fitness for a particular use or purpose.

IHP makes no expressed warranties except as stated in this Limited Lifetime Warranty. The duration of any implied warranty is limited to the duration of this expressed warranty.

No one is authorized to change this Limited Lifetime Warranty or to create for IHP any other obligation or liability in connection with the Product. Some states and provinces do not allow the exclusion or limitation of incidental or consequential damages, so the above limitations or exclusions may not apply to you. The provisions of this Limited Lifetime Warranty are in addition to and not a modification of or subtraction from any statutory warranties and other rights and remedies provided by law.

INVESTIGATION OF CLAIMS AGAINST WARRANTY
IHP reserves the right to investigate any and all claims against this Limited Lifetime Warranty and to decide, in its sole discretion, upon the method of settlement.

To receive the benefits and advantages described in this Limited Lifetime Warranty, the appliance must be installed and repaired by a licensed contractor approved by IHP.

Contact IHP at the address provided herein to obtain a listing of approved dealers/distributors. **IHP shall in no event be responsible for any warranty work done by a contractor that is not approved without first obtaining IHP's prior written consent.**

HOW TO REGISTER A CLAIM AGAINST WARRANTY
In order for any claim under this warranty to be valid, you must contact the IHP dealer/distributor from which you purchased the product. If you cannot locate the dealer/distributor, then you must notify IHP in writing. IHP must be notified of the claimed defect in writing within 90 days of the date of failure. Notices should be directed to the IHP Warranty Department at 1769 East Lawrence Street; Russellville, AL 35654 or visit our website at WWW.IRONSTRIKE.US.COM.

Printed in U.S.A. © 2013 Innovative Hearth Products
P/N 900205-00, Rev. B 02/2018

Innovative Hearth Products
1769 East Lawrence Street • Russellville, AL 35654

WARRANTY

Your wood appliance is covered by a limited warranty (provided with the appliance). Please read the warranty to be familiar with its coverage.

Retain this manual. File it with your other documents for future reference.

REPLACEMENT PARTS

See ***Pages 21 through 23*** for a complete replacement parts list. Use only parts supplied from the manufacturer.

Normally, all parts should be ordered through your IHP distributor or dealer. Parts will be shipped at prevailing prices at time of order.

When ordering repair parts, always give the following information:

1. The model number of the appliance.
2. The Serial Number of the appliance.
3. The part number.
4. The description of the part.
5. The quantity required.
6. The installation date of the appliance.

If you encounter any problems or have any questions concerning the installation or application of this system, please contact your dealer.

Innovative Hearth Products, LLC (IHP)
1769 East Lawrence Street
Russellville, AL 35654
IronStrike.us.com

PRODUCT REFERENCE INFORMATION

We recommend that you record the following important information about your appliance. If you did not purchase your appliance directly from an IHP dealer, then contact us at IronStrike.us.com to find your nearest IHP dealer who will answer your questions or address your concerns.

Model Number _____

Serial Number _____

Date Installed _____

Your Dealer's Name _____

NATIONAL FIREPLACE INSTITUTE NFI CERTIFIED www.nficertified.org

We recommend that our woodburning hearth products be installed and serviced by professionals who are certified in the U.S. by the National Fireplace Institute® (NFI) as NFI Woodburning Specialists or who are certified in Canada by Wood Energy Technical Training (WETT).

Wood Energy Technical Training www.wettinc.ca

Innovative Hearth Products (IHP) reserves the right to make changes at any time, without notice, in design, materials, specifications, and prices, and also to discontinue colors, styles, and products. Consult your local distributor for fireplace code information.

INNOVATIVE HEARTH PRODUCTS

Printed in U.S.A. © 2018 Innovative Hearth Products

P900900-00

IRONSTRIKE®
HEAT FOR LIFE

INSTALLATION AND OPERATION MANUAL

COUNTRY® COLLECTION

Free-Standing EPA Certified Wood-Burning Stoves

Save These Instructions For Future Reference

P/N 900901-00, Rev. NC, 08/2018

P900901-00



Striker™ S160GL Series

Striker™ Wood Stoves Models

S160TGL (Traditional Door)
S160AGL (Arched Door)

PFS® C US

Report # 14-186

A French manual is available upon request. Order P/N 900901-01.

Ce manuel d'installation est disponible en francais, simplement en faire la demande. Numéro de la pièce 900901-01.

This appliance must be properly installed and operated in order to prevent the possibility of a house fire. Please read this entire installation and operation manual before installing and using your wood stove. Failure to follow these instructions could result in property damage, bodily injury or even death. Contact your local building or fire officials to obtain a permit and information on any installation requirements and inspection requirements in your area.

NATIONAL FIREPLACE INSTITUTE® NFI CERTIFIED
www.nficertified.org

We recommend that our woodburning hearth products be installed and serviced by professionals who are certified in the U.S. by the National Fireplace Institute® (NFI) as NFI Woodburning Specialists or who are certified in Canada by Wood Energy Technical Training (WETT).

Wood Energy Technical Training

⚠ WARNING

- **Hot! Do not touch! The glass and surfaces of this appliance will be hot during operation and will retain heat for a while after shutting off the appliance. Severe burns may result.**
- **Carefully supervise children in the same room as appliance.**

Agency Copy

CONGRATULATIONS!

When you purchased your new wood stove, you joined the ranks of thousands of individuals whose answer to their home heating needs reflects their concern for aesthetics, efficiency and our environment. We extend our continued support to help you achieve the maximum benefit and enjoyment available from your new wood stove.

Thank you for selecting a Innovative Hearth Products, LLC (IHP) wood stove as the answer to your home supplemental heating needs.

TABLE OF CONTENTS

Using This Manual 2
Important Safety Information 3
Testing Information 4
Draft Requirements 4
Selecting the Proper Venting System 4
Negative Pressure Warning 5
Creosote 5
Disposal of Ashes 5
Fuel 6
Paint Curing 6
Burn-In Period 6
Clearances to Combustibles 7
Floor Protection 7
Reduced Clearances 7
Alcove Clearances 7
Chimney and Connector 7
Components Required for Installation 7
Installation Clearances 8
Typical Installation Figures 9
Chimney Installation 10
Manufactured (mobile) Home Installations 10
Chimney - Wall Pass-Through Requirements 11
Leg and Heatshield Installation 12
Outside Air Kit Installation 12
Stove Installation 13
Pedestal Installation 14
Post Installation Checks 15
Brick Installation 15-16
Operating Hints 17
Starting and Maintaining a Fire 17
Blower Operation (optional kit) 18
Operating Techniques and Hints 19
Getting the Most Out of Your Stove 19
Maximizing Your Stove's Overall Efficiency 19
Achieving Clean, Long Burns 19
Maintenance 20-21
Troubleshooting 22
Do's and Don'ts 23
Smoke Detector Recommended 23
Carbon Monoxide Monitor Recommended 23
Replacement Parts List 24-28
Accessories 29
Safety / Listing Label 30
Warranty 31
Product Reference Information 32

USING THIS MANUAL

Please read and carefully follow all of the instructions found in this manual. Please pay special attention to the safety instructions provided in this manual.

PRODUCT IS SUBJECT TO CHANGE WITHOUT NOTICE

IMPORTANT SAFETY AND WARNING INFORMATION

READ THIS MANUAL IN ITS ENTIRETY AND UNDERSTAND THESE RULES TO FOLLOW FOR SAFETY.

1. When this room heater is not properly installed, a house fire may result. To reduce the risk of fire, follow the installation instructions. Contact local building or fire officials about restrictions and installation inspection requirements in your area.
2. Wear gloves during installation to avoid injury from sharp edges on the stove and/or its parts.
3. This unit is designed and engineered to burn only dry, well-seasoned wood. Burning wet wood will greatly reduce the Stove's efficiency, produce excessive amounts of smoke and can cause dangerous chimney fires due to creosote build-up.
4. Before opening the door, the draft control must be fully open to avoid possible combustion flash (ignition of hot volatile gases as the door is opened).
5. Never use gasoline, gasoline-type lantern fuel, kerosene, charcoal lighter fluid, or similar liquids to start or 'freshenup' a fire in this heater. Keep all such liquids well away from the heater while it is in use. DO NOT USE CHEMICALS OR FLUIDS TO START THE FIRE.
6. While burning, fuel utilizes oxygen from the air in the room. Be sure to allow an adequate amount of fresh air into the room where the stove is burning.
7. The outside surface of the stove will be hot while burning properly and can set items like clothing and curtains on fire. Keep furnishings and other combustible materials away from the stove. Using the heat from the stove to dry wet clothing can be hazardous if clothes are placed too near the surface of the stove.
8. HOT WHILE IN OPERATION. KEEP CHILDREN, CLOTHING FURNISHINGS AND COMBUSTIBLE MATERIAL A CONSIDERABLE DISTANCE AWAY. CONTACT MAY CAUSE SKIN BURNS. Do not allow children to play near the stove without close supervision. Do not touch the stove while it is burning. Use extreme caution while the unit is in use. Surface temperatures become dangerously hot and can cause serious burns.
9. Do not allow anyone to operate the stove who is not familiar with the operating instructions.
10. Attempts to achieve heat output rates that exceed stove design specifications can result in permanent damage to the stove. Never leave your stove unattended on high burn rates. This may cause overfiring. Overfiring the stove may cause a house fire. If the stove glows, you are overfiring.
11. Keep a water hose or hand-operated fire extinguisher close for safety.
12. Smoke Detectors - Since there are always several potential sources of fire in any home, we recommend installing smoke detectors. If possible, install the smoke detector in a hallway adjacent to the room (to reduce the possibility of occasional false activation from the heat produced by the stove). If your local code requires a smoke detector be installed within the same room, you must follow the requirements of your local code. Check with your local building department for requirements in your area.
13. Inspect your chimney at least once a month during the burning season to check for soot and creosote accumulations. Any accumulations over 1/8" thick should be removed by a professional chimney sweep. Do not attempt to burn out heavy creosote accumulations with a hot fire. If large accumulations are occurring, review your burning procedures.
14. If a creosote fire should develop, the fire department should be called immediately and then attempts should be made to control the fire until assistance arrives. If a "runaway" fire should develop causing over-heating of the stove, the door and draft regulators should be closed immediately. The fire should die down once deprived of oxygen. After a severe chimney fire, the complete chimney system should be checked before further use.
15. Do Not Use Grate Or Elevate Fire - Build Wood Fire Directly On Hearth (firebrick). Do not use andirons or other methods of supporting the fuel.
16. Please read this entire manual before you install and use your new room heater. Failure to follow instructions may result in property damage, bodily injury, or even death.
17. Check all local building and safety codes before installation. The installation instructions and appropriate code requirements must be followed exactly and without compromise. In the absence of local codes the following standards and codes must be followed.
18. In the U.S.A, install in accordance with the National Fire Protection Association's Code, NFPA 211, Standards for Chimneys, Fireplaces, Vents and Solid-Fuel-Burning Appliances, or similar regulations, may apply to the installation of a Solid-Fuel-Burning appliance in your area. In Canada, the guideline is established by the CSA Standard, CAN/CSA-B365-M93, Installation Code for Solid-Fuel-Burning Appliances and Equipment.
19. DO NOT CONNECT TO OR USE IN CONJUNCTION WITH ANY AIR DISTRIBUTION DUCTWORK UNLESS SPECIFICALLY APPROVED FOR SUCH INSTALLATIONS.
20. WARNING: BURNING IMPROPER FUEL (I.E. CHARCOAL) CAN RESULT IN CARBON MONOXIDE POISONING, WHICH MAY LEAD TO DEATH!
21. Carbon Monoxide Poisoning – Early signs of carbon monoxide poisoning resemble the flu with headaches, dizziness, or nausea. If you have these signs, get fresh air at once! Have the heater inspected by a qualified service technician. Some people are more affected by carbon monoxide than others. These include pregnant women, people with heart or lung disease or anemia, those under the influence of alcohol, and those at high altitudes.
22. Failure to use manufacturer provided parts, variations in techniques and construction materials or practices other than those described in this manual may create a fire hazard and void the limited warranty.
23. Do not make any make-shift compromises during installation. Any modification or alteration may result in damage to the appliance or dwelling and will void the warranty, certification and listings of this unit.
24. These appliances are designed as supplemental heaters. Therefore, it is advisable to have an alternate heat source when installed in a dwelling.

25. **Do Not Overfire – If Heater or Chimney Connector Glows, You Are Overfiring.**
26. **DO NOT CONNECT THIS UNIT TO A CHIMNEY FLUE SERVING ANOTHER APPLIANCE.**
27. **DO NOT BURN GARBAGE OR FLAMMABLE FLUIDS SUCH AS GASOLINE, NAPHTHA OR ENGINE OIL.**
28. **This wood heater has a manufacturer-set minimum low burn rate that must not be altered. It is against federal regulations to alter this setting or otherwise operate this wood heater in a manner inconsistent with operating instructions in this manual.**

⚠ WARNING

This product can expose you to chemicals including Carbon Black, which is known to the State of California to cause cancer, and Carbon Monoxide, which is known to the State of California to cause birth defects or other reproductive harm. For more information go to www.P65Warnings.ca.gov

TESTING INFORMATION

This manual describes the installation and operation of these non-catalytic wood heaters. These heaters meet the U.S. Environmental Protection Agency's emissions limits, and are compliant with the 2020 Cordwood Standard. These heaters have been developed, tested and constructed in accordance with the requirements of UL 1482, ULC S627 and HUD standards and are listed by PFS Corporation. These heaters have been approved for residential, mobile home and alcove installations.

Model	Emission Rate	EPA Test Range BTU/hr	Max. Output BTU/hr	Efficiency
S160(T/A)GL	2.1 grams/hr	16,000-42,600	55,600	70% *

** Default - Category rating as assigned by the EPA. The estimated efficiency is as follows: 63% (non-catalyst equipped), 72% (catalyst-equipped), and 78% (wood pellets). See § 60.536(i)(3) at www.epa.gov.*

DRAFT REQUIREMENTS

Your wood stove is dependent upon a properly functioning chimney for optimum performance. It is a high efficiency appliance that loses much less heat up the chimney than older appliances and fireplaces. For this reason it is important to match the stove to the chimney. The chimney has two functions:

1. It draws combustion air into the appliance (without air, no fuel will burn) and
2. It exhausts combustion by-products. Your new appliance is what is known as a "natural draft" appliance.

The appliance depends solely on the natural draft of the chimney system to draw combustion air into the unit. Draft is the force that moves air from the appliance up into the chimney. The amount of draft in your chimney depends on the length of the chimney, local geography, nearby obstructions and other factors. Too much draft may cause excessive temperatures in the appliance (overfiring). Slow or inadequate draft equals poor combustion and possible smoking problems.

The following are some conditions that may contribute to poor chimney draft:

1. A chimney too large for your appliance.
2. A chimney with not enough height to produce adequate draft.
3. A chimney with excessive height (this may allow exhaust to cool too much before exiting, which will stall the rate the exhaust exits).
4. Offsets in the venting system are too restrictive (see *Chimney Guidelines)*.

Inadequate draft will cause the appliance to leak smoke into the room through the stove and the chimney connector joints.
Excessive draft may cause an uncontrollable burn or a glowing red stove or chimney part.

Overfiring Damage - If the heater or chimney connector glows, you are overfiring. Other symptoms may include: Cracking, warping or burning out of components, plated accessories may turn color, stove glass may develop a haze, which will not come off with cleaning.

Overfiring of a stove is a condition where excessive temperatures are reached, beyond the design capabilities of the appliance. The damage that occurs from overfiring is not covered under the manufacturer's limited warranty.

Also see *Troubleshooting* on ***Page 22***.

SELECTING THE PROPER VENTING SYSTEM

The appliance is merely one component of a larger system. The other equally important component is the venting system. This is necessary for achieving the required flow of combustion air to the fire chamber and for safely removing unwanted combustion byproducts from the appliance. If the venting system's design does not promote these ends, the system may not function properly. Poorly functioning venting systems may create performance problems as well as be a safety hazard. **A draft test should read greater than .04' W.C. (inches water column) and less than .08" W.C**. As per NFPA-211 standard (see paragraph below), the installer must take into account all variables within the installation and install the appliance in such a manner that satisfies the draft requirements of the appliance. See *Chimney Guidelines* below to assist you in selecting the proper venting system for your installation.

American National Standards Institute ANSI/NFPA 211, Standard for Chimneys, Fireplaces, Vents, and Solid Fuel-Burning Appliances - See Draft Section: A chimney or vent shall be so designed and constructed to develop a flow sufficient to completely remove all flue and vent gases to the outside atmosphere. The venting system shall satisfy the draft requirements of the connected appliance in accordance with the manufacturer's instructions.

Chimney Guidelines:

- This appliance requires approximately 12 feet minimum of "effective draw" provided by the venting system. As a rule of thumb, every 90 degree total direction change in the venting will result in a loss of approximately 5 feet of "effective draw." Example: If two 45 degree offsets are used, subtract 5 feet from the actual vertical vent height to determine your "effective draw." In this case if you had 14 feet of vertical vent, the effective draw would only be approximately 9 feet (14 ft. - 5 ft. = 9 ft.), therefore it may be necessary to add additional height to the venting system.
- Do not install an offset within the first two feet above the flue outlet on the appliance.
- In well insulated and weather tight homes, it may be difficult to establish a good draft up your chimney. The poor draft is caused by a shortage of air in the house. In this situation an Outside Air Kit may need to be installed *(See Negative Pressure Warning on* ***Page 5*** *and Outside Combustion Air on* ***Page 12****)*.

Chimney Height Requirements

The chimney must extend 3' (.92m) above the level of roof penetration and a minimum of 2' (.61m) higher than any roof surface within 10' (3m) (see below). Check with your local building officials for additional requirements for your area.

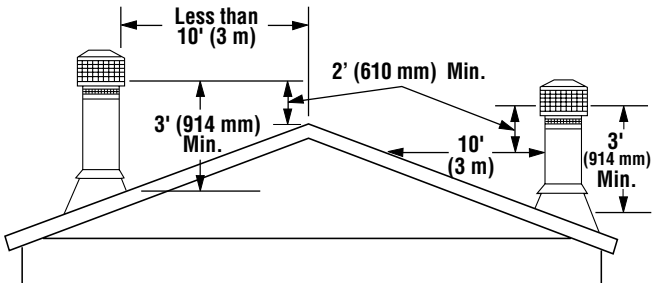

***Figure 1** - Chimney Height Requirements*

To pass inspection in nearly any jurisdiction, the chimney must meet both safety and exhaust flow requirements. The (3' by) 2' by 10' rule applies to both masonry and factory-built chimneys.

**** Ref. USA - National Standard, NFPA 211-latest edition and Canada National Standard CSA B365-01-latest edition. Vents installed with a listed cap shall terminate in accordance with the terms of the cap's listings.***

NEGATIVE PRESSURE WARNING

This appliance is not designed to be operated in a negative pressure. In very airtight homes with large kitchen exhaust fans, furnace cold air returns, fresh air exchange systems and any other air system in close proximity to the heating appliance may create a negative pressure in the same room as the heating appliance. This can create dangerous back drafting of the stove and chimney joints, drawing combustion by-products into the home. Be sure your home has adequate makeup air to eliminate negative pressures caused by the above-mentioned sources. Outside air connected to the appliance probably will not resolve such a problem as the appliance is not the source of negative pressure. IHP accepts no liability for damages resulting from negative pressures described here.

Ventilation Requirements - Provide adequate air for combustion. The fresh air requirements of this appliance must be met within the space where it will be installed. Ventilation is essential when using a Solid-Fuel-Burning heater. In well insulated and weather tight homes, it may be difficult to establish a good draft up the chimney (caused by a shortage of air in the home). The lack of air is caused by many common household appliances which exhaust air from the home (such as a furnace, heat pump, air conditioner, clothes dryer, exhaust fans, fireplaces, and other fuel burning appliances). Also, the combustion process of this heater uses oxygen from inside the dwelling. If the available fresh air delivery in the dwelling is insufficient to support the demands of these appliances, problems can result (i.e. excessive negative pressure can develop in the dwelling which will affect the rate at which this appliance can draft thus resulting in performance problems. To correct this problem it may help to open a window (preferably on the windward side of the house) or install an optional outside air kit.

CREOSOTE

Creosote Formation and Need for Removal - When wood is burned slowly, it produces tar and other organic vapors, which combine with expelled moisture to form creosote. The creosote vapors condense in the relatively cool chimney flue of a slow-burning fire. As a result, creosote residue accumulates on the flue lining. When ignited, this creosote makes an extremely hot fire. The chimney and chimney connector should be inspected at least once monthly during the heating season to determine if a creosote build-up has occurred. If creosote has accumulated (1/8" [3 mm] or more), it should be removed to reduce the risk of a chimney fire.

Establish a routine for the fuel, wood burner and firing technique. Check daily for creosote build-up until experience shows how often you need to clean to be safe. Be aware that the hotter the fire the less creosote is deposited, and weekly cleaning may be necessary in mild weather even though monthly cleaning may be enough in the coldest months. Contact your local municipal or provincial fire authority for information on how to handle a chimney fire. Have a clearly understood plan to handle a chimney fire.

DISPOSAL OF ASHES

Whenever ashes get 3 to 4 inches deep in your firebox, and when the fire has burned down and cooled, remove excess ashes. Leave an ash bed approximately 1 inch deep on the firebox bottom to help maintain a hot charcoal bed.

Ashes should be scooped out of a cool stove or fireplace insert with a small metal shovel. Ashes should be placed in a steel container with a tight fitting lid and moved outdoors immediately. Other waste shall not be placed in this container. The closed container of ashes should be placed on a non-combustible floor or on the ground, well away from all combustible materials, pending final disposal. If the ashes are disposed of by burial in soil or otherwise locally dispersed, they should be retained in the closed container until all the cinders have thoroughly cooled. Ashes can ignite up to 72 hours after removal from the appliance.

FUEL

This appliance is designed to burn dry seasoned natural wood only (see *Page 23* for a list of prohibited fuels). Failure to burn proper fuels only will void the certification and the warranty of the appliance.

Dry, seasoned wood is that which has been cut, split and allowed to dry under a covered area where air is free to flow and circulate under and around the wood (not under a tarp or plastic). Make sure wood is not stacked directly on the ground, it may absorb moisture from the ground. It should be allowed to dry in these conditions for a minimum of six months, preferably one year or more. **IT MUST BE UNDERSTOOD THAT WOOD CANNOT BE LEFT IN ANY KIND OF WET OR DAMP AREA OR IT WILL NEVER BECOME COMPLETELY SEASONED**.

Do Not store fuel within space heater installation clearances or within the space required for refueling and ash removal.

DO NOT OVERFIRE THIS HEATER

Attempts to achieve heat output rates that exceed heater design specifications can result in permanent damage to the heater.

What does "Well-Seasoned" mean?

When a tree is cut down, the wood is green, full of sap and moisture. This moisture content can exceed 80%, which must be reduced to less than 20%. Wood properly seasoned is then capable of generating the heat the stove was designed to provide.

Green wood does not burn easily. Attempting to burn green wood often results in a lot of smoke and very little fire. Time is the most important factor in seasoning wood. Ideally the moisture content should be reduced to 11-20%. ***NOTE: The use of a firewood moisture meter is recommended to ensure the firewood contains less than 20% moisture.***

Seasoning Guide
Softwoods - 6 months to 18 months
Hardwoods - 12 months to 24 months

Logs that are 5" diameter across or larger should be split in half, three pieces if over 8 inches, and four pieces when over a foot across. If a tree has been dead for 2 - 4 years it still needs to be cut, split, and seasoned for 6 to 24 months depending on the wood.

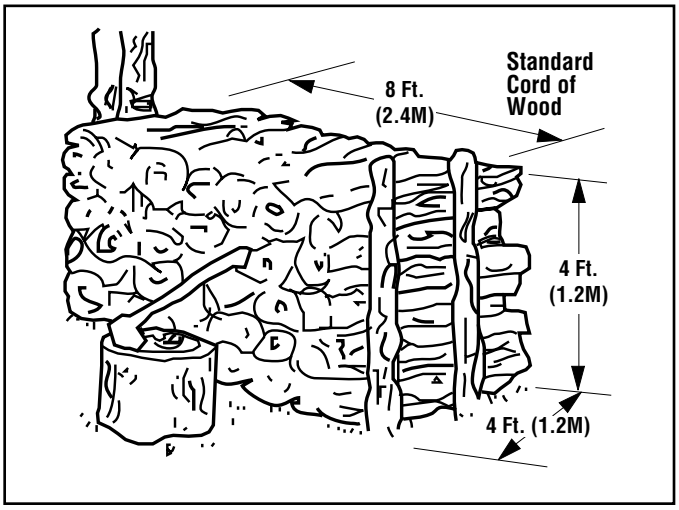

PAINT CURING

If your appliance has plated accessories, be sure to clean plated surfaces with a household type glass cleaner and a very soft cloth to remove any fingerprints and residues prior to the first fire and before any fire if the plated surfaces have been handled or soiled. Do not close the door tightly during the "Burn-In Period." Also, open the door frequently (every 5-10 minutes) to keep the gasket from adhering to the curing paint. Ventilate the house well during these first firings as the paint gives off carbon dioxide and unpleasant odors. It is recommended that persons sensitive to an imbalance in the indoor air quality avoid the appliance during the curing process.

Your new appliance is painted with a high temperature paint that cures during the first few firings. We recommend that you put your stove or fireplace insert through a regimen of three burns. The first two should last for 20 minutes each at 250 degrees (the appliance should be allowed to cool completely between each burn). The third should be a burn of at least 450 degrees F. for 45-60 minutes. The paint will become soft, gummy and emit non-toxic smoke during these burns. After the appliance cools down for the third time, the paint will harden. **DO NOT BUILD A LARGE ROARING FIRE UNTIL THIS CURING EFFECT IS COMPLETE OR YOU MAY DAMAGE THE FINISH OF YOUR STOVE.** Spray can touch-ups should be done only with a high temperature stove paint (cat. no. H8159), available from all IHP dealers.

BURN-IN PERIOD

Please be patient with the heat output of your appliance for the first few weeks. The steel will go through a curing process that eliminates moisture, which is deep in the steel and firebrick. This moisture will reduce initial heat output of your appliance and may make it difficult to start. **(DO NOT OVERFIRE THE STOVE DURING THIS PROCESS. IF THE STOVE OR CHIMNEY BECOMES RED, REDUCE THE AMOUNT OF AIR ENTERING THE STOVE IMMEDIATELY).**

NOTE: DIAGRAMS & ILLUSTRATIONS ARE NOT TO SCALE.

CLEARANCES TO COMBUSTIBLES

WARNING: BE ABSOLUTELY SURE THE DISTANCE BETWEEN THE HEATER AND THE SURFACE OF ANY COMBUSTIBLE CONSTRUCTION IS NOT LESS THAN SHOWN IN THE FIGURES ON PAGE 8.

Floor Protection

USA - The floor in front and under the heater must be protected with noncombustible material. The covering must extend 16" in front of the door opening of the heater and 8" to either side of the door opening

Canada - The floor in front and under the heater must be protected with noncombustible material. The covering must extend 450 mm in front of the door opening of the heater and 200 mm to either side of the stove body and 200 mm to the rear or to the wall, whichever is smaller.

USA and Canada - A chimney connector / venting extends horizontally over the floor, protection must also cover the floor under the connector / venting and at least 2" (51 mm) to either side.

Reduced Clearances

Clearances to combustible surfaces can be reduced with the use of listed double wall connector pipe. See the clearances with double wall pipe on the following page.

Alcove Clearances

Single Wall Pipe - Minimum 48" (1219 mm) width, maximum 48" (1219 mm) depth. Minimum ceiling height is 84" (2134 m).

Double Wall Pipe - Minimum 44" (1117 mm) width, maximum 48" (1219 mm) depth. Minimum ceiling height is 72" (1829 mm).

Chimney and Connector

Minimum 6" diameter, minimum 24 MSG black steel connector pipe with UL103HT listed factory-built chimney suitable for use with solid fuels or masonry chimney. Horizontal connection not tested, refer to local building codes for installation. See installation instructions for details. Restrictions apply! Read instructions before installing.

Clearance dimensions are to 6" (152 mm) flue collar. If a single wall connector pipe with shield is used, a 1 inch air space is needed between pipe and shield. Shield attaches to rear of stove pipe and must run from stove top to ceiling. Pipe shield shall be UL listed.

Residential chimney systems must be from the same brands as listed for mobile homes but connector pipe may be double wall, single wall or single wall with shield as listed above.

This appliance may be vented into a code-approved masonry chimney with flue liner.

WARNING: Chimney connector must be in good condition and kept clean. Do not install damaged parts.

All of the stove connector pipe used must be of the same brand. The chimney that the stove pipe transitions into may be a different brand. Other than the transition of the stove pipe into the chimney, do Not mix different brand vent components. Install all vent components per vent manufacturer's instructions.

The chimney connector shall not pass through an attic or roof space, closet or similar concealed space, or a floor, or ceiling. Where passage through a wall, or partition of combustible construction is desired, the installation shall conform to CAN/CSA-B365, Installation Code for Solid-Fuel-Burning Appliances and Equipment.

There must be an effective vapor barrier at the location where the chimney or other component penetrates to the exterior of the structure. Follow the vent manufacturer's detailed instructions.

IMPORTANT NOTE: See *Draft Requirements* and *Selecting a Proper Venting System* on ***Page 4*** to assist you in choosing the proper venting system for your installation.

Components Required For Installation

Legs AND Bottom Heat Shield or Pedestal Base.

Use all required components specified for this appliance. <u>Do not substitute</u>.

WARNING: In the event that you remove the blower for any reason, make sure a cover plate (available from IHP) is installed before using the heater. Excessive rear wall temperatures will result if the stove is burned without the cover plate. *NOTE: The cover plate is not necessary if a blower has never been installed because a knock-out will be in place to act as the cover.*

NOTE: DIAGRAMS & ILLUSTRATIONS ARE NOT TO SCALE.

INSTALLATION CLEARANCES - REFER TO *FIGURES 2, 3 AND 4*

PIPE	INSTALLATION	A	B (1)	C	D (1)	E†	F (1,4)	G (4)
6" Single Wall	Residential or Alcove	USA-16" CAN-483mm	14" 356mm	USA-21" CAN-610mm	12-1/2" 318mm	8" 200mm	9-3/4" 248mm	USA-18" CAN-533mm
❷6" Single w/ Pipe Shield	Residential or Alcove	USA-10" CAN-330mm	8" 200mm	USA-18" CAN-533mm	9-1/2" 241mm	8" 200mm	5-1/2" 140mm	USA-13-1/2" CAN-419mm
6" Double Wall	Residential or Alcove or Mobile Home*	USA-10" CAN-330mm	8" 200mm	USA-18" CAN-533mm	9-1/2" 241mm	8" 200mm	5-1/2" 140mm	USA-13-1/2" CAN-419mm

PIPE	INSTALLATION	H (2)	I (6)	J (2)	K	L (5)	M
Single Wall	Residential or Alcove	USA-33-3/4" CAN-1111mm	USA-47-3/4" CAN-1340mm	USA-33-1/2" CAN-1003mm	USA-16" CAN-450mm	USA 0" CAN-200mm	84" 2134mm
❷Single w/ Pipe Shield	Residential or Alcove	USA-33-3/4" CAN-1111mm	USA-41-3/4" CAN-1188mm	USA-33-1/2" CAN-1003mm	USA-16" CAN-450mm	USA 0" CAN-200mm	84" 2134mm
Double Wall Air-Cooled	Residential or Alcove or Mobile Home*	USA-33-3/4" CAN-1111mm	USA-41-3/4" CAN-1188mm	USA-33-1/2" CAN-1003mm	USA-16" CAN-450mm	USA 0" CAN-200mm	72" 1829mm

PIPE	INSTALLATION	N❶	P❶	T (6)
Single Wall	Residential or Alcove	30" 762mm	36" 914mm	USA-58-1/2" CAN-1645mm
❷Single w/ Pipe Shield	Residential or Alcove	30" 762mm	36" 914mm	USA-52" CAN-1486mm
Double Wall Air-Cooled	Residential or Alcove or Mobile Home*	30" 762mm	36" 914mm	USA-52" CAN-1486mm

† USA=8" (200mm) from door opening, Canada=8" (200mm) from sides and back of unit

❶ Dimensions to Stove Body

❷ Clearances may only be reduced by means approved by the regulatory authority.

* Mobile Home - USA only

Figure 2 Top View-Parallel Installation

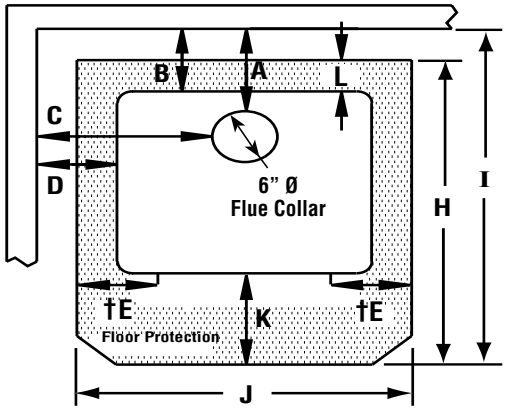

Figure 3 Side View-Alcove & Parallel Installation

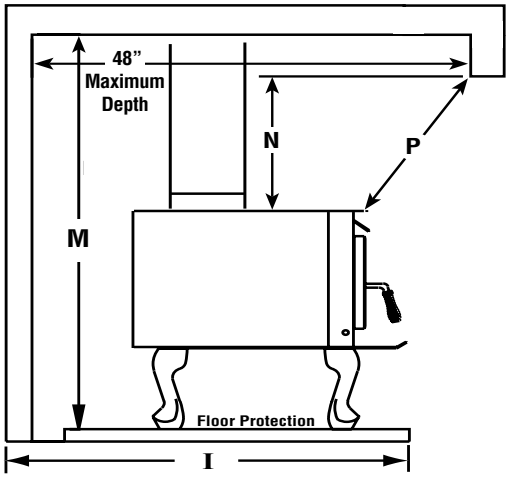

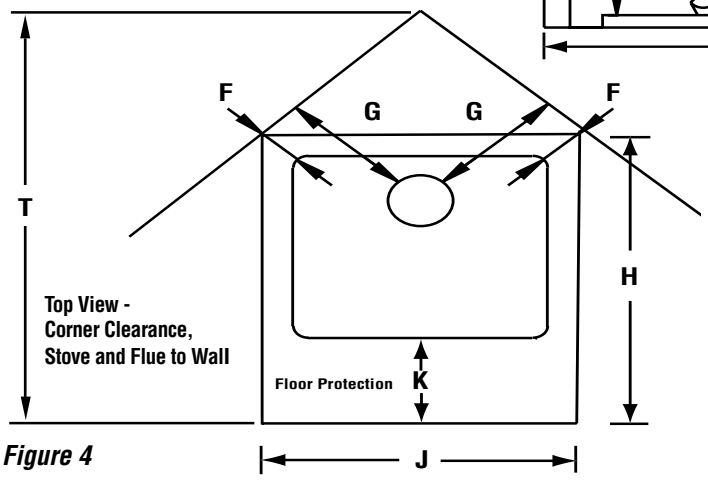

Figure 4

Footnotes:

1- These dimensions to the stove body are for reference only. Actual distances should be measured from the stove's flue collar.
2- Minimum noncombustible hearth pad dimensions.
3- Shield shall be attached to the rear of the stove pipe with a 1" air space and must run from the top of the stove to the ceiling.
4- Not applicable to alcove installations.
5- In corner applications, when installed at minimum back wall clearances, the required floor protection is dimensioned off the back plane of the stove, therefore the floor protection required off the back corners (at a 45 degree angle) only needs to extend to the wall. This situation will only occur in CANADA installations.
6- Reference dimension only, to assist in planning the installation.

Clearances to connector pipe shall be measured from the flue collar of the stove.

NOTE: DIAGRAMS & ILLUSTRATIONS ARE NOT TO SCALE.

Single Wall Pipe
Using 6” Diameter Single Wall Connector Pipe

INSTALL VENTING SYSTEM PER VENT MANUFACTURERS INSTRUCTIONS!

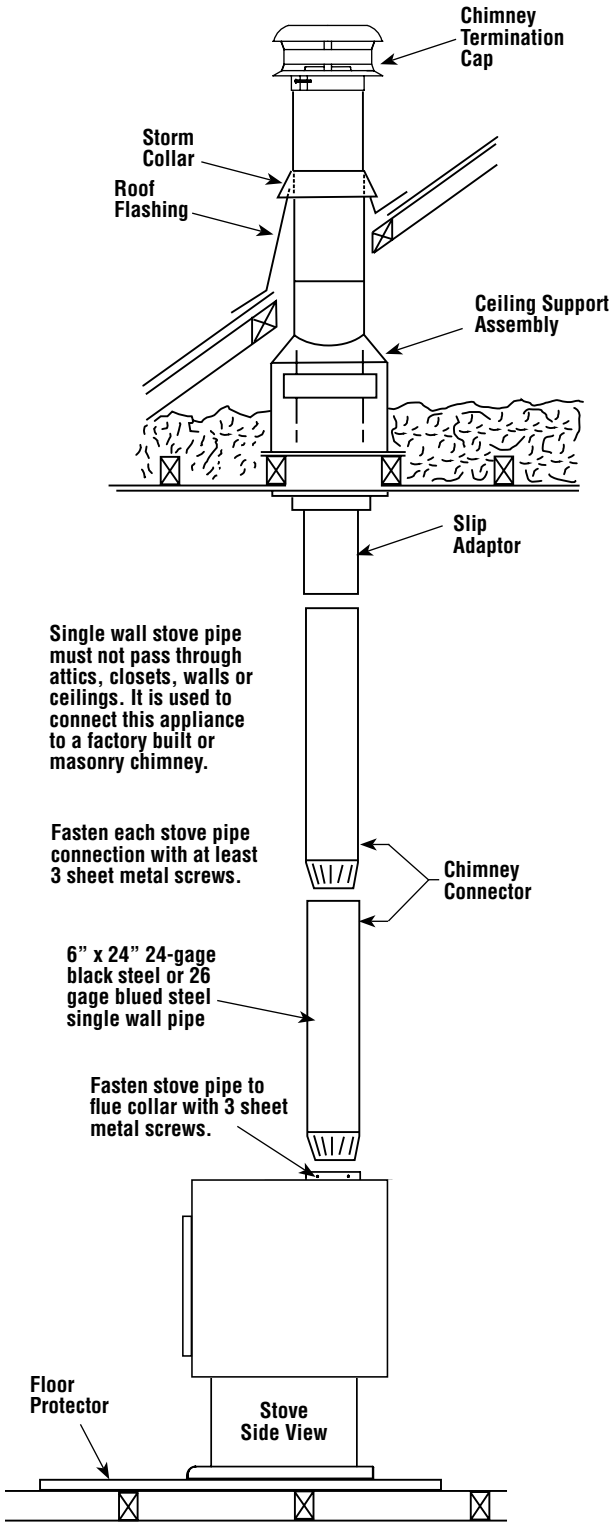

Figure 5 - Typical Installation

STAINLESS STEEL LINER
Using 6” Diameter Rigid Stainless Steel Liner

INSTALL VENTING SYSTEM PER VENT MANUFACTURERS INSTRUCTIONS!

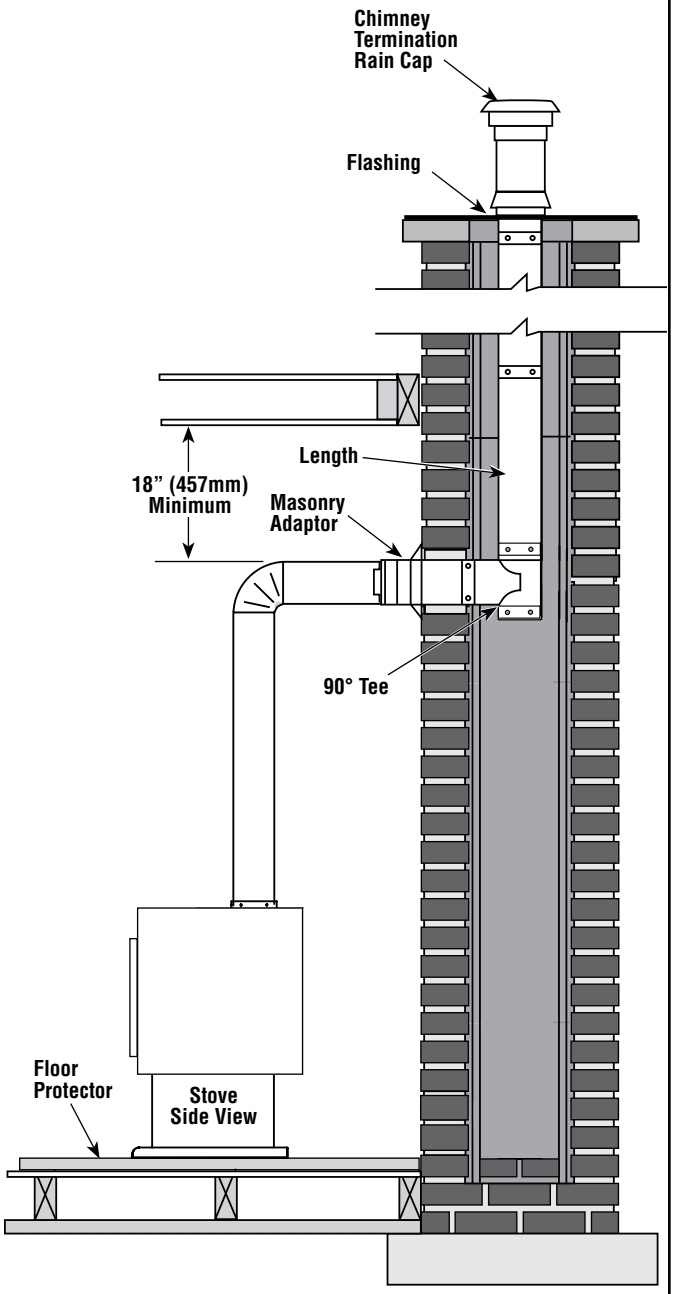

Figure 6 - Connected to a Masonry Chimney

YOUR CHIMNEY INSTALLATION MUST COMPLY WITH LOCAL BUILDING AND FIRE CODES.

NOTE: DIAGRAMS & ILLUSTRATIONS ARE NOT TO SCALE.

CHIMNEY INSTALLATION

- Install chimney as per manufacturer's instructions. Some brands of pipe may require removal of the spacer ring in the flue collar.
- All horizontal runs of pipe should be as short as possible and are required by NFPA No. 211 to have an upward pitch or rise in the same direction the smoke travels of no less than 1/4" to the linear foot. The connector pipe must meet minimum clearances in any direction to walls or other combustible materials. It must attach to a listed double wall metal chimney at least 6" in diameter or to a masonry chimney with a flue passage of at least 48 square inches.
- It is required that a chimney connector pipe not extend further than the inner wall of the flue when it is connected to a masonry chimney and that it either be cemented to the masonry or be installed without cement in a thimble connected to the masonry wall. When the connector is inserted into a thimble, the joint must be tight enough so that it will not be dislodged in normal use. Install connector at no less than the minimum clearances from the ceiling when using a 90-degree elbow to pass through combustible constructions.
- Chimney connector pipes should never pass through a floor, ceiling, fire wall, partition, or combustible construction of any type unless certain precautions are taken. The best method is to use a listed thimble and a listed chimney in accordance with the manufacturer's directions. NFPA No. 211 gives approved methods for passing a flue pipe through combustible constructions *(see **Page 11**)*.

Manufactured Home Installations
*(ref. **Figure 7**)*

This appliance is approved for installation into a manufactured (mobile) home in the USA ONLY!

Installation should be in accordance with the Mobile Home Construction and Safety Standard, Title 24 CFR, Part 3280 (in Canada CAN/CSA Z240 MH), or, when such a standard is not applicable, the Standard for Mobile Home Installations, ANSI A225.1.

All mobile home installations require an outside air kit (see ***Page 29*** for ordering information). The stove must be secured to the floor and grounded to the chassis of the mobile home.

WARNING: DO NOT INSTALL IN SLEEPING ROOM OF A MOBILE HOME.

CAUTION: THE STRUCTURAL INTEGRITY OF THE MOBILE HOME FLOOR, WALL AND CEILING/ROOF MUST BE MAINTAINED.

Approved Chimney - Your stove is approved for use with Class A, UL 103 HT (U.S.) / ULC-S629 (Canada) Listed Residential Type and Building Heating Appliance Chimney (HT chimney - 2100° Fahrenheit) and double wall connector pipe**.** Approved chimney brands are Security Chimneys™, Jakes Evans/GSW, Dura-vent, Metal Fab, Ameri-Tec, Metalbestos and Industrial Chimney (ICC).

Clearances to connector shall be measured from 6" flue collar. Restrictions apply! Read instructions before installing.

YOUR CHIMNEY INSTALLATION MUST COMPLY WITH LOCAL BUILDING AND FIRE CODES.

Double Wall Pipe
Using 6" Diameter Type L-Vent Connector Pipe
Mobile (Manufactured) Home Installation Shown

INSTALL VENTING SYSTEM PER VENT MANUFACTURERS INSTRUCTIONS!

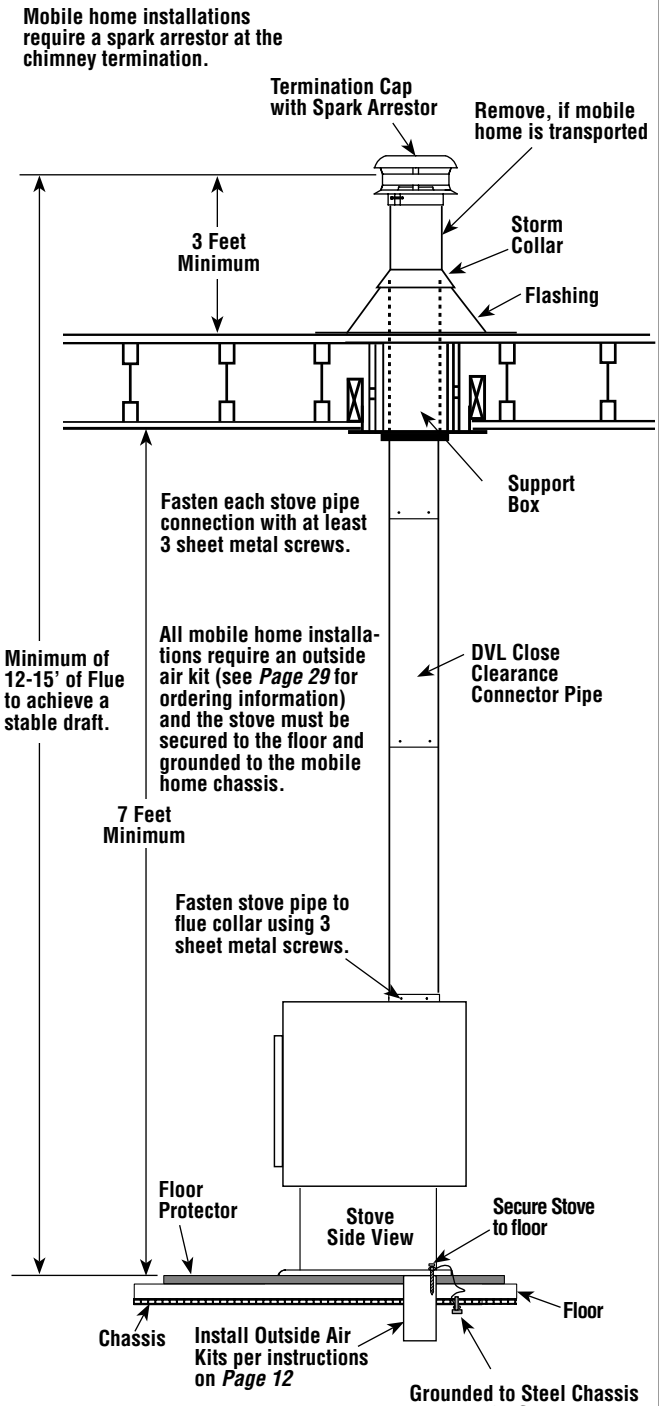

Figure 7 - Typical Installation

NOTE: DIAGRAMS & ILLUSTRATIONS ARE NOT TO SCALE.

Chimney Connector Systems and Clearances from Combustible Walls for Residential Heating Appliances (NFPA 211) Refer to ***Figure 8***

System A. Minimum 3.5 in. (90 mm) thick brick masonry wall framed into combustible wall with a minimum of 12 in. (305 mm) brick separation from clay liner to combustibles. Fireclay liner (ASTM C 315, Standard Specification for Clay Flue Linings, or equivalent), minimum 5/8 in. (16 mm) wall thickness, shall run from outer surface of brick wall to, but not beyond, the inner surface of chimney flue liner and shall be firmly cemented in place.

Clearance: 12 in. (305 mm)

System B. Solid-insulated, listed factory-built chimney length of the same inside diameter as the chimney connector and having 1 in. (25.4 mm) or more of insulation with a minimum 9 in. (229 mm) air space between the outer wall of the chimney length and combustibles.

The inner end of the chimney length shall be flush with the inside of the masonry chimney flue and shall be sealed to the flue and to the brick masonry penetration with non-water-soluble refractory cement. Supports shall be securely fastened to wall surfaces on all sides.

Fasteners between supports and the chimney length shall not penetrate the chimney liner.

Clearance: 9 in. (229 mm)

System C. Sheet steel chimney connector, minimum 24 gauge [0.024 in. (0.61 mm)] in thickness, with a ventilated thimble, minimum 24 gauge [0.024 in. (0.61 mm)] in thickness, having two 1 in. (25.4 mm) air channels, separated from combustibles by a minimum of 6 in. (152 mm) of glass fiber insulation. Opening shall be covered, and thimble supported with a sheet steel support, minimum 24 gauge [0.024 in. (0.61 mm)] in thickness.

Supports shall be securely fastened to wall surfaces on all sides and shall be sized to fit and hold chimney section. Fasteners used to secure chimney section shall not penetrate chimney flue liner.

Clearance: 6 in. (152 mm)

System D. Solid-insulated, listed factory-built chimney length with an inside diameter 2 in. (51 mm) larger than the chimney connector and having 1 in. (25.4 mm) or more of insulation, serving as a pass-through for a single wall sheet steel chimney connector of minimum 24 gauge [0.024 in. (0.61 mm)] thickness, with a minimum 2 in. (51 mm) air space between the outer wall of chimney section and combustibles. Minimum length of chimney section shall be 12 in. (305 mm). Chimney section concentric with and spaced 1 in. (25.4 mm) away from connector by means of sheet steel support plates on both ends of chimney section. Opening shall be covered, and chimney section supported on both sides with sheet steel supports of minimum 24 gauge [0.024 in. (0.61 mm)] thickness.

Supports shall be securely fastened to wall surfaces on all sides and shall be sized to fit and hold chimney section. Fasteners used to secure chimney section shall not penetrate chimney flue liner.

Clearance: 2 in. (51 mm)

Additional requirements:

1. **Insulation material used as part of wall pass-through system shall be of noncombustible material and shall have a thermal conductivity of 1.0 Btu-in./hr-ft² - °F (4.88 kg-cal/hr-m² - °C) or less.**
2. **All clearances and thicknesses are minimums; larger clearances and thicknesses shall be permitted.**
3. **Any material used to close up an opening for the connector shall be of noncombustible material.**
4. **A connector to a masonry chimney, except for System B, shall extend in one continuous piece through the wall pass-through system and the chimney wall to the inner face of the flue liner, but not beyond.**

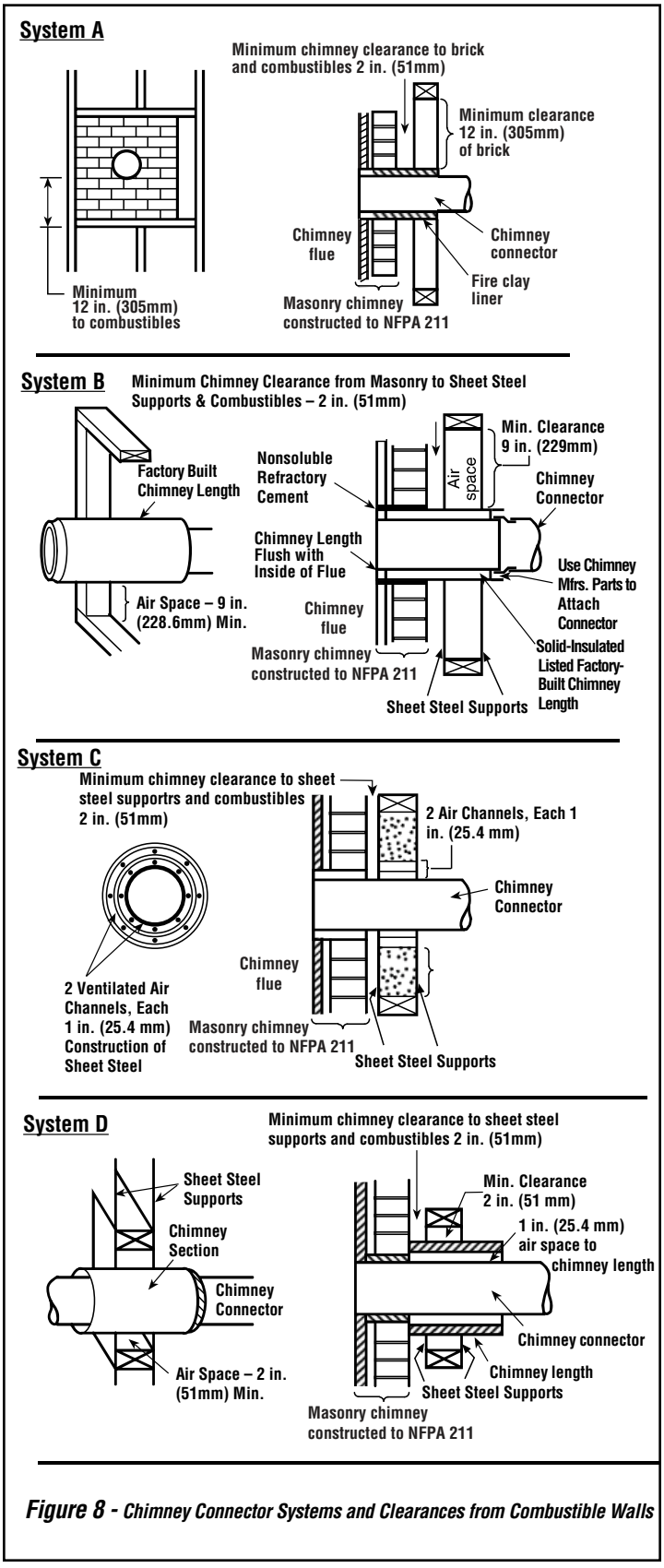

***Figure 8** - Chimney Connector Systems and Clearances from Combustible Walls*

NOTE: DIAGRAMS & ILLUSTRATIONS ARE NOT TO SCALE.

LEG AND HEATSHIELD INSTALLATION

NOTE: The threaded rods used to bolt the legs to the stove are packaged with the heatshield, as a heatshield is required when a stove is installed on legs.

Residential and Mobile Homes

(Bolting down and grounding of stove are required only in mobile homes).

Open all cartons, if any and remove the contents upon receipt and check for any damaged or missing parts. If there is hidden damage, notify your freight company or IHP dealer immediately.

CAUTION: Wear gloves during installation in case of sharp edges on the stove.

Leg Installation

1. Carefully place stove on its back. Be careful not to scratch the stove, use a piece of cardboard or carpet to protect the back of the stove.
2. Mount all four legs as shown in ***Figure 9***.
3. First, screw the threaded rods into the holes at the four corners on the bottom of the stove. Screw the threaded rods into the firebox three full rotations or 3/16 to 1/4" (if the rear rods are screwed in too far they will lift the bricks off the bottom of the stove). Use a washer and nut to secure the leg. Be sure the legs are mounted squarely on the firebox bottom. Tighten nuts securely.
4. Use the two bolts and washers provided with the heatshield kit to mount the heatshield as shown in ***Figure 10***.
5. Do not over tighten the heatshield mounting bolts as it may bend the heatshield.

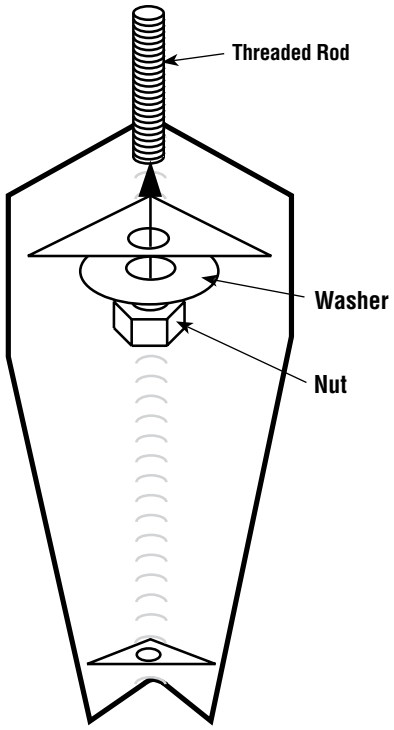

Figure 9

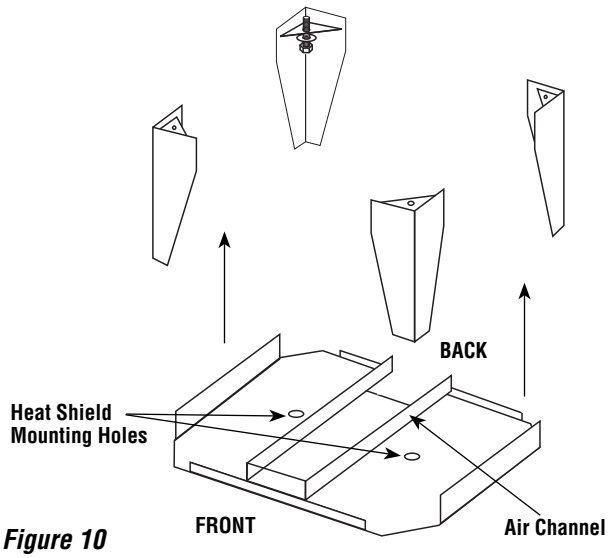

Figure 10

OUTSIDE AIR KIT INSTALLATION

To install the "Outside Air Kit," position the clip so that the nut is directly above the hole punched in the back of the heatshield (See ***Figure 11***). Install the outside air adapter box on the stove by sliding it into the air channel located between the bottom heatshield and the stove bottom until the oblong ring is approximately 1/4" from the rear edge of the lower heatshield. Make sure the ring is facing down. Thread the 1/4" bolt up through the nut in the clip until snug against the adapter box.

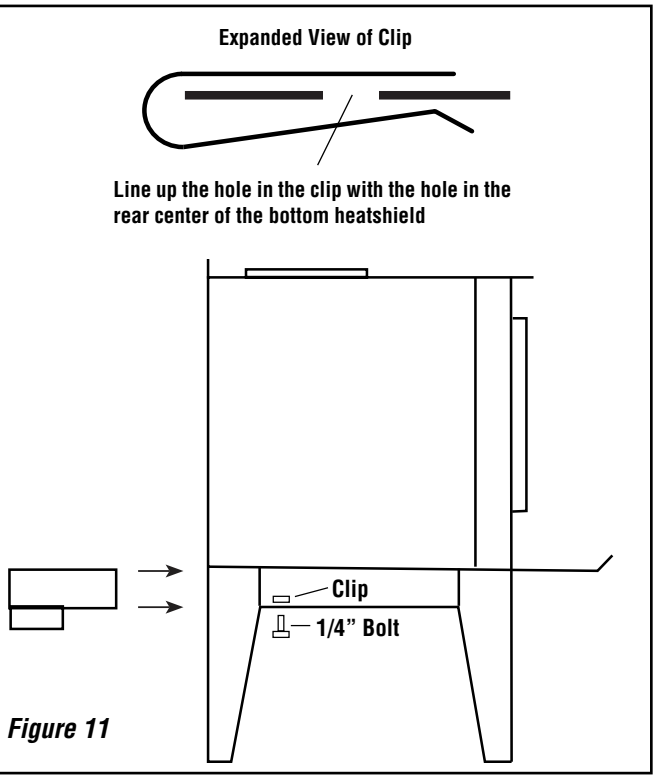

Figure 11

To locate the hole in the hearth for outside air, mark a 4" circle on the hearth. The circle's center should be 2-3/4" directly back from the center of the flue outlet and 5/8" to the left side.

NOTE: DIAGRAMS & ILLUSTRATIONS ARE NOT TO SCALE.

STOVE INSTALLATION

1. If not previously installed, install floor protection and move the heater into the desired location.
2. Position the stove on your floor protection in the exact location where it is to be located, making sure all minimum clearances are met.
3. If you are installing outside air on your stove, mark a 4" circle on the floor protection just below the oblong ring. When cut out, this hole will accommodate the flexible outside air tube.
4. If the stove is to be fastened to the floor, locate the hold down brackets inside the leg box and mark the floor protection below the holes in the brackets.
5. If you are installing outside air on your stove, remove the stove and cut the floor protection and the floor where the 4" air tube circle had been previously drawn. If the stove is to be fastened to the floor, drill 1/2" holes through the floor protection only, at the marks that were for fastening the stove to the floor if so desired. Slip the flexible outside air tube through the hole in the floor, leaving 1" of tube above the floor protector surface, using tape to hold it in place.
6. Place the stove on the floor protection so that the previously cut or drilled holes line up. Attach the stove to the floor with the lag bolts if so desired.
7. If you are installing outside air on your stove place the hose clamp over the flexible air tube and slide the tube up over the 4" ring on the outside air adaptor box and tighten the hose clamp. Push the outside air adaptor forward 1/4" until full contact is made with the lower heatshield. Tighten the 1/4" bolt until the adaptor box is held firmly in place. Use silicone sealant to create a seal between the flexible air tube and your floor protection.
8. If it is necessary to level, secure or ground your stove, use the holes in the bottom of the leg for those applications. To level the stove on Olympic cast legs, locate the front leg that is not touching the hearth pad. Insert the allen head screw through the slotted washer (supplied with the legs) and into the threaded hole in the bottom of the leg. See ***Figure 12***. Push the slotted washer down until it touches the hearth pad and then tighten the screw into the leg. Should any other leg not be resting on the hearth pad, install a washer and screw in that leg as well.
9. Install baffle boards and baffle blanket as per instructions on ***Pages 15 and 16***. It is highly recommended that the baffle be assembled before the chimney is installed so that the baffle blanket can be adjusted into place through the flue collar.
10. If installed into a mobile home, the stove shall be grounded to the mobile home chassis with a #8 AGW copper wire or equivalent.
11. For residential installations, install the first section of stove pipe with the crimped end going down inside the flue collar on the heater. Continue with your stove pipe, installing each section-crimped end down. Make the final connection to your chimney. Your dealer carries the necessary pipe and fittings to connect to the various listed factory-built chimneys. **YOUR CHIMNEY INSTALLATION MUST COMPLY WITH LOCAL BUILDING AND FIRE CODES.**
12. Be sure to fasten each stove pipe connection with at least 3 sheet metal screws.
13. Install chimney as per manufacturer's instructions. Some brands of pipe may require removal of the spacer ring in the flue collar.
14. All horizontal runs of pipe should be as short as possible and are required by NFPA No. 211 to have an upward pitch or rise in the same direction the smoke travels of no less than 1/4" to the linear foot. The connector pipe must meet minimum clearances in any direction to walls or other combustible materials. It must attach to a listed double wall metal chimney at least 6" in diameter or to a masonry chimney with a flue passage of at least 48 square inches.
15. It is required that a chimney connector pipe not extend further than the inner wall of the flue when it is connected to a masonry chimney and that it either be cemented to the masonry or be installed without cement in a thimble connected to the masonry wall. When the connector is inserted into a thimble, the joint must be tight enough so that it will not be dislodged in normal use.
    Install connector at no less than the minimum clearances from the ceiling when using a 90-degree elbow to pass through combustible constructions.
16. Chimney connector pipes should never pass through a floor, ceiling, fire wall, partition, or combustible construction of any type unless certain precautions are taken. The best method is to use a listed thimble and a listed chimney in accordance with the manufactures directions. NFPA No. 211 gives approved methods for passing a flue pipe through combustible constructions.

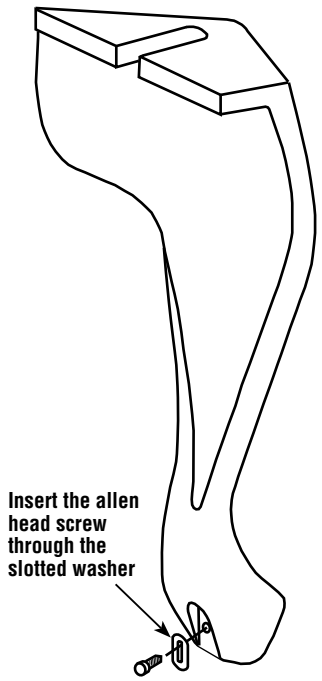

Figure 12

PEDESTAL INSTALLATION

(For ash drawer pedestal see instructions included with pedestal)

Residential and Mobile Homes

(Bolting down and grounding are required only in mobile homes)

CAUTION: Wear gloves during installation in case of sharp edges on the stove.

1. Remove the heater from the carton, if packaged, upon receipt and check for any damaged or missing parts.

2. Carefully put the stove on pedestal with the open end of the pedestal facing the rear. **DO NOT LEAVE THE STOVE UNATTENDED UNTIL IT IS BOLTED SECURELY TO THE PEDESTAL.**

3. Line up the holes in the brackets on the pedestal with the threaded holes in the bottom of the stove. Use the two 1/2" long bolts and 3/8" standard washers to bolt the stove to the pedestal. Be sure to see that the stove is mounted squarely on the pedestal before tightening the two bolts securely.

4. When installing a pedestal on this stove you **MUST** plug the four leg mounting bolt holes, located on the bottom of the stove in the four corners, with the bolts that were used to mount the shipping legs. **The two rear bolts should not be installed more than two full rotations to prevent lifting the bricks off the bottom of the stove. FAILURE TO INSTALL THESE FOUR BOLTS PROPERLY WILL RESULT IN REDUCED CONTROL OF THE STOVE'S COMBUSTION SYSTEM!**

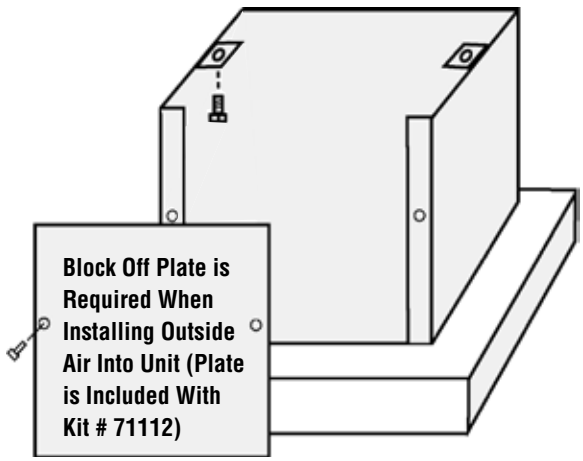

Figure 13

5. If required, install the Outside Air Kit (cat. no. 71112) as per the following instructions. To locate the hole in the hearth for outside air mark and cut a 4" (102 mm) hole in the hearth. The hole's center should be 3" (76 mm) directly forward from the center of the flue outlet or locate as per the instructions below.

6. Position the stove on your floor protection in the exact location where it is to be located, making sure all minimum clearances are met. Mark the floor protection where the pedestal will be located, then remove the stove.

7. Make four 1-1/2" (38 mm) cuts in one end of the corrugated tube and fold the flaps back. Cut a 4" (102 mm) hole through the floor protection and the floor and insert the corrugated tube into the hole. Cover it with the supplied screen and fasten it to the floor protector.

8. Locate the 11-1/2" x 14" (292 mm x 356 mm) metal plate and paint to match the stove if necessary. Position this piece so that the 14" (356 mm) dimension evenly overlaps the lips on the back of the pedestal (see drawing below). Attach this plate to the back of the pedestal with the self-tapping screws supplied.

9. If the stove is to be fastened to the floor, attach the stove with the supplied lag bolts, through the pedestal base on opposite sides, attaching them into the floor beneath the floor protection. Seal any irregularities with silicone sealer.

10. If installed in a mobile home, the heater shall be grounded to the chassis with a #8 AGW copper wire or equivalent.

11. Install bricks as per instructions on ***Pages 15 and 16***. It is highly recommended that the baffle be assembled before the chimney is installed so that the baffle blanket can be adjusted into place from the flue outlet.

12. Install chimney as per manufacturer's instructions.

POST INSTALLATION CHECKS

1. Check that all chimney pipe joints are securely fastened.

2. Check that the heater is securely fastened to the floor (if applicable).

3. Make sure the intake vent has clear access to outside air (if applicable).

4. Make sure the outside air vent has been sealed properly to keep rodents out (if applicable).

5. Be sure all roof flashings are watertight.

6. Be sure the stove is properly grounded (if applicable).

FOR YOUR OWN PROTECTION AND INSURANCE PURPOSES, HAVE YOUR CHIMNEY AND CONNECTOR PIPE INSTALLATION INSPECTED BY YOUR LOCAL BUILDING CODE AUTHORITY OR FIRE MARSHAL BEFORE STARTING A FIRE IN YOUR STOVE. NOTIFY YOUR INSURANCE COMPANY.

BRICK INSTALLATION

CAUTION: Wear gloves during brick installation in case of sharp edges inside the stove.

NOTE: *Installation of the baffle boards and baffle blanket is easier when you can still access the flue outlet, (before connecting the flue vent).* ***Be sure the baffle blanket is placed flat on the baffle boards so as not to block exhaust flow to the flue.*** *Use a ruler or a piece of kindling to reach over the baffle blanket to be sure it is completely flat on top of the baffle boards.*

Measure bricks before installing, as per list of dimensions on next page, to be sure the correct bricks are installed in the correct location.

1. Install bricks #1-18 in the numbered sequence shown in ***Figure 14*** on ***Page 16.***

2. Next, you will install the rear baffle boards which are the smaller two of the four baffle boards. The boards will be installed with the 3-9/16" dimension from the front to the rear of the firebox. These boards will be placed on the top side of the rear baffle just to the rear of the middle secondary tube, you will push the baffle boards towards the rear of the firebox until they fall in place at the rear side of the middle secondary tube. You will place one board to the far left side of the firebox and one board to far right side of the firebox. Confirm that both boards are laying flat on the rear baffle and that they are not overlapping each other.

3. Next, you will install the baffle blanket. It will be installed with the 11" dimension from the front to rear of the firebox. Install by lifting it into place between the front and rear baffle. Place the blanket over the rear baffle and rear baffle boards that you have just installed. Next you will place the baffle blanket that is protruding beyond the front side rear baffle on the top side of the front baffle.
4. The final step of the baffle board & baffle blanket installation will be installing the front baffle boards. The front baffle boards will be the two remaining baffle boards which are the larger two baffle boards of the four baffle board kit. They will be installed with the 7-3/8" dimension from the front to rear of the firebox. Start by setting the back side of the board on the rear baffle making sure that it is placed far enough back to lift up and onto the front baffle. Next you will place the front edge of the front baffle boards on the top side of the front baffle and slide them towards the firebox front until it stops against the front baffle edge. You will do this with each front baffle board with one to the right side of the firebox and one to the left side of the firebox. Confirm that the baffle blanket is directly on top of the baffle boards and that it does not protrude beyond the front baffle or front baffle boards as shown in ***Figure 15*** (also see note on ***Page 15***).

Side Cut-A-Way View of Firebox

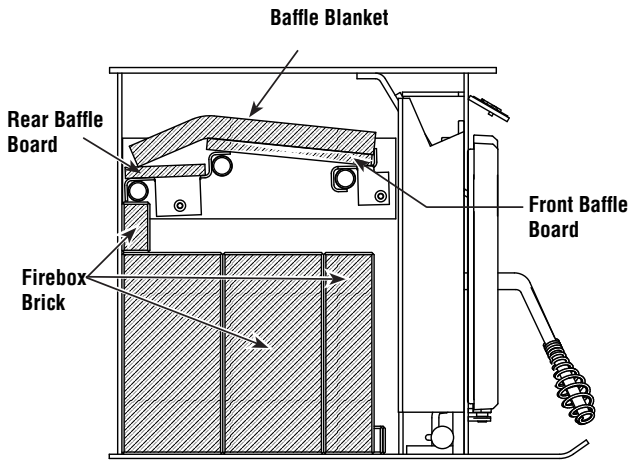

Figure 15

Brick Sizes

A = 4-1/4" x 9"
B = 2-1/4" x 8-7/8"
D = 2-1/4" x 9"
E = 1-1/2" x 8-7/8"
F = Full Brick (4-1/2" x 9")
G = 1-1/2" x 9"

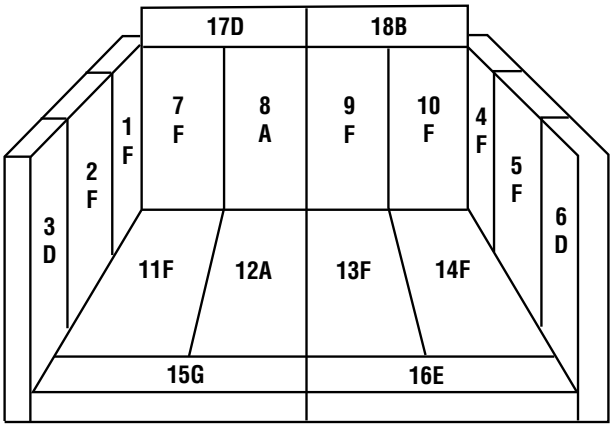

Figure 14

Baffle Insulation Parts

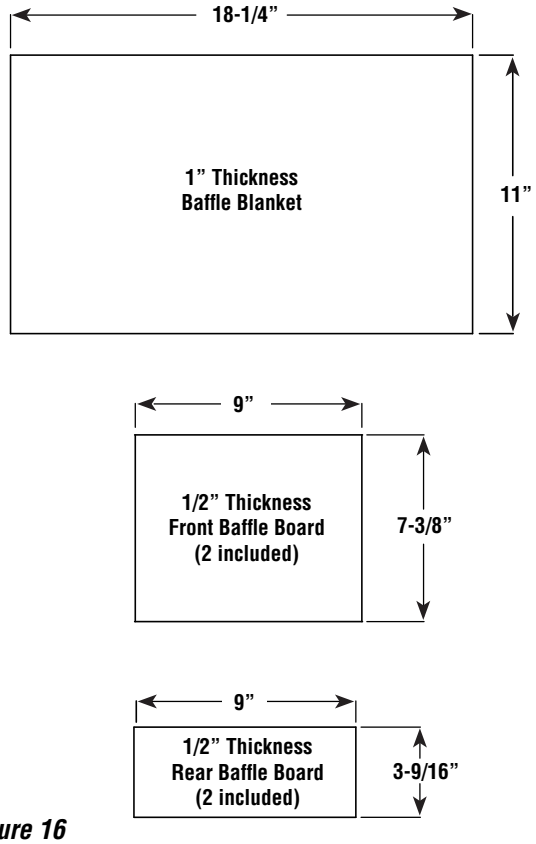

Figure 16

NOTE: DIAGRAMS & ILLUSTRATIONS ARE NOT TO SCALE.

OPERATING HINTS

1. Burn only dry, well-seasoned wood for maximum heat output. In some states it is illegal to burn wet wood or anything other than clean, dry wood products.
2. Your stove or fireplace insert is designed to operate with the door closed! Operate only with the door shut tightly at all times except when loading wood and possibly on start up to establish a draft. Never leave the unit unattended while the front door is slightly opened.
3. **DO NOT** hit or move the baffle board while loading wood. Occasionally check the baffle. Make sure the baffle blanket is always flush with the front of the baffle boards. Loading oversized logs may dislodge the baffle boards.
4. **CAUTION: THE DRAFT CONTROL MUST BE FULLY OPEN BEFORE OPENING THE DOOR TO AVOID POSSIBLE COMBUSTION FLASH!!** (Ignition of hot volatile gases as the door is opened).
5. Feeding excessive amounts of fuel to the appliance should be avoided. It is important to supply it with sufficient draft and fuel to maintain a moderately hot fire. If, during overnight burns, heavy creosote deposits develop inside your stove and on the door, the draft is set too low - review your burning habits!

⚠ WARNING

Be careful not to abuse door assembly by striking or slamming it. If the door assembly or glass is broken or damaged, they must be replaced with factory original parts before heater can be safely operated. Use only components provided by the manufacturer as replacement parts.

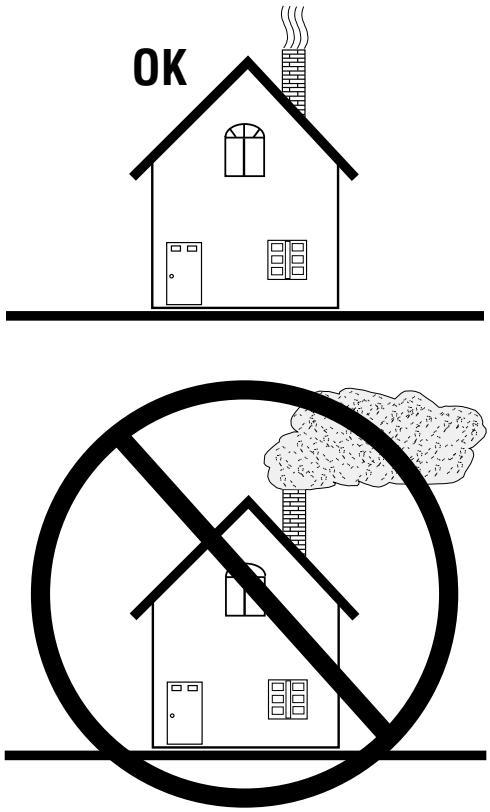

Figure 17

STARTING AND MAINTAINING A FIRE

Be sure to clean plated accessories with a household type cleaner and a very soft cloth to remove any fingerprints and residues prior to the first fire.

1. **NEVER USE FLAMMABLE LIQUIDS TO START OR REKINDLE A SOLID FUEL FIRE!!**
2. Fully open the primary draft control by pulling the 1" plastic knob out on the left side (lower front corner) until it stops (away from the stove). This control determines the amount of air entering the stove. Pushing it toward the stove reduces the burn rate in the firebox. For your convenience, the rod on this control is marked with four grooves to assist you in obtaining repeatable burn rates.
3. Place a small amount of crumpled paper in front of the firebox and cover it with a few pieces of kindling.
4. Light the paper and allow sufficient time for the kindling to become fully engulfed in flames. You will now close the wood units front door. (Your wood units front door may or may not need to be left slightly open during this start up process, this depends on the appliance model and the amount of draft present. Do not leave the unit unattended while the front door is slightly open) Once kindling is burning well, larger pieces of wood may be added, then the door should be fully closed if there was the need to keep it slightly open during start up.

   DO NOT LEAVE THE STOVE UNATTENDED WHILE THE FRONT DOOR IS SLIGHTLY OPEN.

   CAUTION: Do Not alter the adjustment range of the draft control for increased firing for any reason.

   Operate only with fuel door and ash drawer closed. Maintain all seals in good condition. Do not operate with broken glass.

   Do Not build the fire too close to the glass.

   Do not operate the appliance with the door open or ajar other than possibly during start up to create a draft (Do not leave the unit unattended while the front door is slightly open during start up). Operating the appliance with the door open other then in initial start up if needed will produce extreme temperatures within the appliance. Damage caused from over-firing is not covered under the manufacturers limited warranty.
5. When operating any wood burning appliance, it is important to become familiar with how the damper control affects heat output and the overall temperature of the appliance. A stove thermometer can be a helpful tool to help ensure you are not over-firing your appliance and it will also ensure you are burning fuel at a rate that is most efficient. Place a stove thermometer on the top of the appliance. Monitor the temperature every 15 minutes or so until you become more familiar with your appliance. Close the damper all the way down if you begin to reach 600 degrees, as this is a sign that you are operating your appliance at too high a temperature.
6. For best results, use smaller pieces of wood to get the appliance temperature very high before loading larger wood for sustained burns. If necessary, crack the door to allow ignition of the fuel charge. **Do not leave the unit unattended while the front door is slightly open**. Now you can add larger pieces of wood and after several minutes of high burn, set the left control for the desired heat output. Check the exhaust in about 15 to 20 minutes. Large amounts of smoke indicate an improper burn setting (either too high or too low). Adjust and recheck in 5 to 10 minutes.

BLOWER OPERATION

Blower Operation

The blower can be operated manually or automatically (blower will turn on when the stove is hot and turn off when the stove is cool).

The rocker switch on the control panel allows you to select between manual operation or automatic operation as follows (see ***Figure 19***):

— **MANUAL OPERATION:** Turn rocker switch to the "MANUAL" position and adjust rheostat knob to the desired speed. The blower will have to be manually turned "OFF" by rotating the rheostat knob clockwise until it clicks.

═ **AUTO OPERATION:** Turn rocker switch to the "AUTO" position and the rheostat to the ON position (rotate rheostat knob counterclockwise until it clicks). When the stove or insert warms up, the blower will automatically turn on (adjust rheostat knob to the desired speed setting). When the stove or insert cools down, the blower will automatically turn off.

Rheostat Operation - The highest blower speed is obtained by turning the rheostat knob counterclockwise until it clicks "ON", then rotate towards "HIGH" to increase blower speed. Rotate the knob clockwise for a lower speed. To turn off, continue to rotate the knob clockwise until it clicks "OFF."

Blower Operation Guidelines

While in auto operation mode, the blower will turn off and on based on the temperature of the appliance. Auto operation ensures there is sufficient heat build-up to warm the air being moved by the blower before the blower is turned on. Likewise, when the appliance cools off, the blower is turned off to prevent circulating cool air. Depending on the size and intensity of the fire it may be necessary to adjust the blower speed accordingly to ensure uninterrupted blower operation. For example a small fire may require a slower blower speed to keep the heat output by the blower consistent. If the blower is operated in manual mode, it may be necessary to adjust the blower speed as the fire begins to burn down and the appliance is no longer hot enough to effectively heat the air moved by the blower. If the air coming from the blower feels cool, one should either decrease the blower speed or stoke the fire to build up more heat.

NOTE: Turn blower off before opening the door to load the fuel.



Figure 19 - Blower Controls

⚠ WARNING

The blower must be plugged directly into a properly grounded three-prong receptacle, 120 VAC, 60 Hz, single phase. Do not cut or remove the grounding prong from this plug. Do not route power cord under or in front of appliance.

Installation must be in accordance with National Electrical Code, ANSI/NFPA 70 - latest edition. In Canada, the current CSA C22.1 Canadian Electrical Code - latest edition.

DANGER: Disconnect power before servicing blower.

In the event that you remove the blower for any reason, make sure a cover plate (available from IHP) is installed before using the heater. Excessive rear wall temperatures will result if the stove is burned without the cover plate. The cover plate is not necessary if a blower has never been installed because a knock-out will be in place to act as the cover.

Blower Wiring Schematic

NOTE: SWITCH CONDITIONS GIVEN AT ROOM TEMPERATURE

N/C = NORMALLY CLOSED
N/O = NORMALLY OPEN

= FEMALE DISCONNECT
= MALE DISCONNECT
= STUD CONNECTION

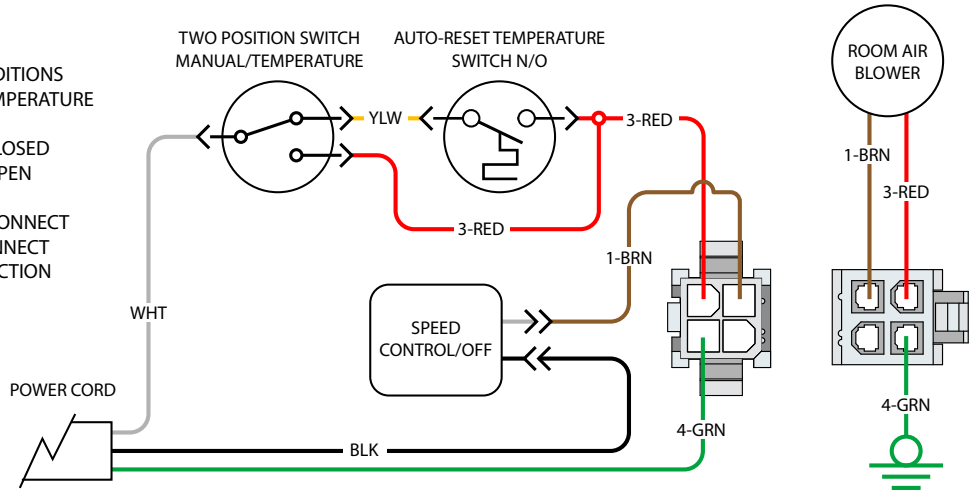

Figure 18

NOTE: DIAGRAMS & ILLUSTRATIONS ARE NOT TO SCALE.

OPERATING TECHNIQUES AND HINTS

Recent developments in wood-burning technology have made wood-burning a cleaner and more convenient way to heat your home. Overall efficiency in a wood-burning appliance is a combination of combustion efficiency and heat transfer efficiency. Whether heating your entire home, or just a room or two, your understanding of how to best operate your stove or insert will enhance its overall efficiency and performance. What this can mean to you is longer, cleaner burns, less wood use and more heat.

GETTING THE MOST OUT OF YOUR STOVE

The following sections will outline techniques you can use to "get the most out of your stove." Please read them carefully.

MAXIMIZING YOUR STOVE'S OVERALL EFFICIENCY

It is important to know that for high, combustion efficient, clean burns, you will need to have sufficient temperatures inside the firebox for thorough combustion. The best method for determining if you have sufficient temperatures is to watch the brick lining in your firebox. When you first light your stove or fireplace insert, the firebrick will turn a dark brown or black. After 20 to 30 minutes of a hot fire, most of the bricks should return to near their original light brown or yellow color. This means the firebrick have reached a high enough temperature for your stove to achieve high combustion efficiency.

Second and just as important, is achieving a high level of heat transfer efficiency. Slowing the rate of flow through the stove or insert enhances heat transfer, thus allowing more time for heat to be transferred into your home. To do this, be sure to thoroughly preheat your stove and then reduce the amount of primary air by closing the draft control (lower left) to about 1/2 to 3/4 open. This will decrease the excess oxygen in your flue, which carries heat up your chimney, but should still be enough air to allow the stove to produce its maximum heat output. (More air may produce a lightly greater amount of heat, but will greatly increase wood consumption). When the area being heated reaches a comfortable temperature, slow the burn rate by closing the control to further improve heat transfer.

To get the most out of your appliance, you will need to combine good combustion efficiency with good heat transfer practices. The following are some tips on how to operate your stove to achieve the highest overall efficiency.

1. Thoroughly preheat your stove before slowing the burn rate by closing the draft control.
2. Measure the stove temperature at the hottest point on the stove top or face. Use this information to repeat burn rates.
3. Once preheated, add wood (if needed) and partially close the draft control (lower left).
4. Operate your stove as much as possible in the low to medium burn ranges.
5. Do not lower the draft setting so low as to completely extinguish the flames in the firebox. Check for at least some small flames 20 minutes after setting the draft control.
6. Do not continually operate your stove or fireplace insert in the high (wide open) setting. This wastes wood by carrying a great deal of heat up the chimney and can damage your stove or fireplace insert and chimney.
7. Go outside and check your chimney. More than a very small amount of smoke indicates wasted heat, creosote build-up and pollution.

ACHIEVING CLEAN, LONG BURNS

To achieve long burn times, after having thoroughly preheated the appliance, let the appliance top cool down to 275 to 400 degrees (on Elites, locate thermometer on the face of the insert just above the door). Now load the firebox and set the draft control. At this point, you may need to burn the stove with the draft open for a few minutes to ignite the wood. All IHP stoves are EPA tested for emissions at low burn with the air control completely closed. Whether or not you should burn your stove with the air control completely closed will depend on the following factors.

* How you load your wood
* Your chimney type, height and draft
* Your wood type and its moisture content
* The temperature of the appliance
* Which model stove or insert you have

Experiment with different loading configurations to achieve longer burns. Try loading the wood from side to side and nesting it in the ashes to prevent airflow under and around the wood. Fresh wood should be loaded to the back of the firebox or to the sides. Hot coals or half burned wood should be brought towards the front of the firebox. The way you load your wood can seriously affect burn times. If the new load does not ignite within a few minutes, try crisscrossing the load to allow more airflow around the fire, or try a slightly hotter stove temperature.

Determining the lowest setting for efficient low burns. This will require some experimentation on your part. Try closing the air control all the way with the stove temperature at 325 to 350 degrees. If the flames are completely extinguished, open the air control halfway and then slowly close it until there is only a small amount of flame. It is important to check the stove about 20 minutes after setting the draft control as it takes this long for the stove temperature to stabilize. There should still be some small flames on or above the wood load.

Use 325 degrees as a starting point. You can try starting temperatures 25 degrees higher or lower to achieve desired burn times, start 25 degrees lower if the stove burns the wood too quickly or 25 degrees higher if there are no flames in the firebox for more than a few minutes after loading the wood. You may or may not need to burn the stove with the air control open for a few minutes prior to setting the draft for a low burn, this will depend on the factors mentioned above. **Be sure not to smolder a fire overnight. Check your chimney for large amounts of smoke as this indicates very poor combustion.**

It is important to realize that stove technology has changed. Stoves have changed a great deal in the last few years. This has led to substantial changes in the methods of operation in new stoves as compared to older stoves. In old stoves without full brick linings and ceramic insulation, the rule was "get the stove as hot as possible before setting the draft on low for overnight burns." On newer, high technology stoves, this is not necessary. Although it is still important to have the stove hot enough to burn efficiently, it will require less preheating. Once you have determined your optimum operating temperatures for various burn rates, we believe you will find your stove an extremely convenient way to achieve your heating needs.

Do not reload the stove for long burns when the stainless secondary tubes or baffles are glowing red, or when the stove is uncomfortably hot to load. This indicates the stove is too hot to load for a long burn. Also, do not load wood for a long burn on a deep bed of hot coals. Try stirring the coals a few minutes before loading the stove for a low burn to allow some of the unburned coals time to burn.

NOTE: DIAGRAMS & ILLUSTRATIONS ARE NOT TO SCALE.

MAINTENANCE

Have your product inspected at least once a year by a qualified service technician to ensure gaskets, air tubes, baffles, and venting are in good repair to ensure proper performance. Have degraded items replaced by a qualified service technician.

THIS WOOD HEATER NEEDS PERIODIC INSPECTION AND REPAIR FOR PROPER OPERATION. IT IS AGAINST FEDERAL REGULATIONS TO OPERATE THIS WOOD HEATER IN A MANNER INCONSISTENT WITH OPERATING INSTRUCTIONS IN THIS MANUAL.

DOOR HINGES: If door hinges need lubricating, use an anti-seize compound (never use oil) available from your IHP dealer.

DOOR LATCH: If your door latch fails to latch tightly and the gasket is in good condition, place a length of pipe (cheater bar) over the inside portion of the door handle and bend slightly toward the door until the proper adjustment is obtained. If the door handle does not close easily, apply high temperature anti-seize to the striker.

DOOR GASKET: Periodically check gasket to make sure it is not overcompressed. If compressed, replace with a special woven Door Rope. (Don't try substituting rope, only use special IHP Door Rope).

PLATED ACCESSORIES: Clean only with household type glass cleaner and a very soft cotton cloth. Other products may damage plated finish, paint and gaskets.

BAFFLE BLANKET: Your baffle blanket should be inspected during every chimney cleaning. If the baffle blanket is compressed or heavily stained, it should be replaced. Heavy creosote stains or matting is an indication of improper use and your burning habits should be reviewed.

GLASS CLEANING: Only clean glass with products specifically made to use on wood stoves. Other products could damage gaskets and paint. Never scrape glass with a razor blade. This can pit the glass and make it impossible to clean in the future.

WINDOW GASKET: The window gasket can be checked by running the flame of a match near the gasket and around the door. If the flame is drawn in around the window, the gasket should be replaced.

DOOR HANDLE: Door handle may become tight as you use the stove. Free the handle up by using dry graphite supplied with the stove. The directions are included with the graphite.

⚠ WARNING

Inspect and clean chimney and connector frequently. Under certain conditions of use, creosote buildup may occur rapidly.

GLASS REPLACEMENT INSTRUCTIONS

Step 1. **Remove Door Assembly** - Open door to remove E clip from the upper hinge pin. Remove upper hinge pin by pulling up while holding the opposite side of the door. Lift door out of the lower hinge pin and place face down on a soft surface.

Step 2. **Remove Door Back Screws (6 ea.)** - Using a 5/32" allen wrench remove the 6 retainer screws from the faceplate. To locate screws, peel back the door gasket as necessary.

Step 3. **Disassemble Door Assembly** - Flip door assembly over to be face up. Separate faceplate from door back by pulling up on faceplate.

Step 4. **Remove Glass** - Carefully remove broken glass one piece at a time (protective gloves are recommended)

Step 5. **Install New Glass Assembly** - Install the new glass with gasket in recess on door back (use only factory supplied 5mm ceramic glass. Do not substitute).

Step 6. **Reinstall Faceplate and Screws** - Reinstall faceplate onto door back and while holding the door assembly together flip the assembly back onto it's face. Carefully reinstall the screws. Be very careful not to overtighten the screws (this could result in glass breakage when the appliance is hot) and it is highly recommended to use anti seize on the screws.

Step 7. **Reinstall Door** - Set door assembly back into the lower hinge mount while holding the handle side of the door up. Place the upper hinge pin back in the mount and door assembly. Reinstall the E clip that was removed.

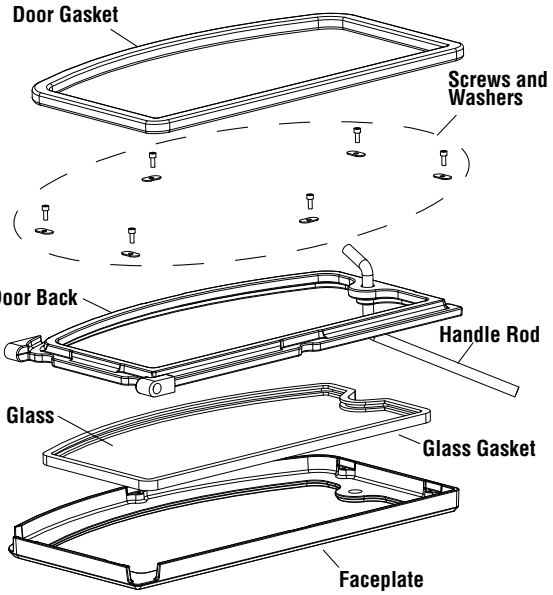

Figure 20

GLASS CLEANING GUIDELINES

WARNING: DO NOT CLEAN GLASS WHEN APPLIANCE IS HOT!

Glass on any wood stove or fireplace insert will not stay perfectly clean. Here are some guidelines for cleaning and caring for the glass:

- **Ensure the appliance is cold prior to cleaning glass.**
- This appliance is designed to provide a flow of air over the inside of the glass, where along with high heat helps inhibit build-up on the glass. When build-up occurs, a commercial glass cleaner designed for stoves is recommended. Regular household glass cleaners will not clean creosote.
- Do not use abrasives such as steel pads, steel wool or oven cleaner as they will scratch the glass. Never scrape glass with a razor blade as this may pit the glass and make it impossible to clean in the future.
- Do not use chemical glass cleaners as they may damage the gaskets or painted surfaces.

TIPS FOR KEEPING THE GLASS CLEAN

- Burn only dry seasoned cord wood. **Wet wood = Dirty glass.**
- A short, hot fire (15 - 20 minutes) may help to clean off some of the normal buildup. **Lower burns = more build-up. Higher burns = less build-up.**
- Keep freshly loaded wood away from the glass.
- After reloading, allow all the wood to catch flame before dampering down the appliance.

⚠ CAUTION

Cleaning Glass: Ensure appliance is cold prior to cleaning glass. A commercial glass cleaner designed for stoves is recommended. Do not use abrasive cleaners. Do not clean with any materials, which may scratch or otherwise damage the glass. Scratches on the glass can develop into cracks or break. Inspect the glass regularly. If you detect a crack, extinguish the fire and contact your dealer for a replacement.

NOTE: DIAGRAMS & ILLUSTRATIONS ARE NOT TO SCALE.

TROUBLESHOOTING

Problem	Solution
POOR DRAFT:	Extend chimney in length or have the chimney realigned to the proper size flue. Oversized chimneys normally have poor drafts. Remember, the appliances' draft depends solely on the natural draft of the chimney (See Draft Requirements on ***Page 4***). If your stove or fireplace insert is not drafting properly, your chimney is the problem. All stoves are thoroughly tested to ensure proper draft with the correct size chimney flue.
EXCESSIVE DRAFT:	With better chimneys being more common, excessive draft can be an issue. Alleviate excessive draft by slowing the burn rate of the appliance once it has reached proper operating temperature (See Maximizing Your Stoves Overall Efficiency on ***Page 19***).
DIRTY GLASS:	1) Burn smaller, hotter fires and check to make sure you are not setting the draft down too far with the draft control. 2) Make sure your wood is well-seasoned and dry (not open to rain - see Creosote and Fuel sections on ***Pages 5-6***). 3) See Poor Draft section (above) and Cleaning Glass on ***Page 20*** .
SMOKES WHEN DOOR IS OPEN:	1) If smoke is entering the room, check to make sure your baffle boards are properly installed and that the baffle blanket is pushed back flush with the front of the baffle boards. 2) Check the chimney for blockage due to creosote (see Chimney and Creosote sections on ***Pages 5 and 7***). 3) Check draft (See POOR DRAFT section above).
WOOD BURNS TOO FAST:	1) The draft control must be closed further. 2) Add fuel at lower firebox temperatures. 3) Load wood side to side and reduce the flow of air under wood. 4) The door seal may need replacing, check for leakage. 5) See "Excessive Draft."
POOR HEAT OUTPUT:	1) Check your wood. Wet, moist, unseasoned wood will not produce heat. 2) Your stove or fireplace insert needs to be seasoned (moisture removed from the steel and brick). Continue to burn a fire. It normally takes from one to three weeks of burning to season your stove (See Burn-In Period on ***Page 6***). 3) See Excessive Draft section above.
PAINT GIVES OFF ODOR (smoke):	Paint is tempering-in. Burn only moderately hot for the first few days until paint is fully cured. Then burn a very hot fire to cure any paint that may not easily cure. Open windows or door to ventilate (See Burn-In Period on ***Page 6***).

DO'S AND DON'TS

DO NOT: Install or operate the appliance before reading this manual.

DO NOT: Close the draft beyond the point at which the flames are completely extinguished.

DO NOT: Open the appliance door without fully opening the draft first.

DO NOT: Burn driftwood or wood that has been in salt water. This includes some mill ends and scrap lumber that has been floated in salt water on the way to the mill. (This will void your warranty).

DO NOT: Handle the plated faceplate unnecessarily. Use the door handle only.

DO NOT: Force oversized logs into the firebox as this may dislodge the baffle assembly.

DO NOT: Close the door tightly during Burn-In Period.

DO: Be sure to clean any fingerprints from optional accessories that have plated surfaces before burning the appliance. Clean the plated surfaces only with household type glass cleaner and a very soft cloth.

DO: Consult local building department if other than recommended clearances are desired.

DO: Read instructions for the baffle boards and baffle blanket occasionally to ensure you have not bumped or moved them out of place when loading wood.

DO: Check the chimney and baffle monthly to make sure they are clean.

DO: Burn seasoned, dry wood only! (RAIN = WET WOOD)

DO: Open the door frequently during Burn-In Period to keep gasket from adhering to the curing paint.

DO: Enjoy the warm feeling of your new IHP appliance.

Smoke Detector Recommended

Since there are always several potential sources of fire in any home, we recommend installing smoke detectors. If possible, install the smoke detector in a hallway adjacent to the room (to reduce the possibility of occasional false activation from the heat produced by these appliances). If your local code requires a smoke detector be installed within the same room, you must follow the requirements of your local code. Check with your local building department for requirements in your area.

Carbon Monoxide Monitor Recommended

Carbon Monoxide Poisoning: Early signs of carbon monoxide poisoning are similar to the flu with headaches, dizziness and/or nausea. If you have these signs, obtain fresh air immediately. Some people are more affected by carbon monoxide than others, including pregnant women, people with heart or lung disease or anemia, those under the influence of alcohol, and those at high altitudes.

It is against federal regulations to operate wood heaters in a manner inconsistent with operating instructions in the manual.

PROHIBITED FUELS

This heater is designed to burn natural wood only. Higher efficiencies and lower emissions generally result when burning air dried seasoned hardwoods, as compared to softwoods or to green or freshly cut hardwoods. DO NOT BURN:

- **Garbage;**
- **Lawn clippings or yard waste;**
- **Materials containing rubber, including tires;**
- **Materials containing plastic;**
- **Waste petroleum products, paints or paint thinners, or asphalt products;**
- **Materials containing asbestos;**
- **Construction or demolition debris;**
- **Railroad ties or pressure-treated wood;**
- **Manure or animal remains;**
- **Salt water driftwood or other previously salt water saturated materials;**
- **Unseasoned wood;**
- **Christmas tree branches;**
- **Paper products, colored paper, cardboard, plywood, or particleboard;**
- **gasoline;**
- **naphtha;**
- **engine oil;**
- **flammable liquids;**
- **solvents;**
- **grease; or**
- **coal**

The prohibition against burning these materials does not prohibit the use of fire starters made from paper, cardboard, saw dust, wax and similar substances for the purpose of starting a fire in an affected wood heater.

Burning these materials may result in release of toxic fumes or render the heater ineffective and cause smoke. Intense firing with these materials may overheat the fireplace, causing damage to the unit, a fire or even possibly igniting a chimney fire if the chimney is creosoted. Burning unapproved fuel, resulting in excessive pollutants being emitted, may be prohibited and subject to a fine or other penalty by the authority having jurisdiction in your area.

REPLACEMENT PARTS - MODELS S160TGL AND S160AGL

Contact an IHP dealer to obtain any of these parts. Never use substitute materials. Use of non-approved parts can result in poor performance and safety hazards.

FRONT DOOR PARTS LIST		
Item #	Cat. No	Description
1	H5639	Door Rope Kit, 7/8" Dia. (6' 2")
2	H5629	Upper Hinge Pin
3	H5625	Upper Hinge Pin E-Clip
4	H5628	Lower Hinge Pin
6	H5640	Glass Gasket Kit (8' 4")
7	H5577	Set of 6 screws and 6 washers for door assembly
8	H5654	Spring Handle / Nickel
9	71067	Traditional Door Glass / Plain
10	71057	Traditional Door Faceplate / Black
	71059	Traditional Door Faceplate / Nickel
	71145	Traditional Door Faceplate / Brushed Nickel
11	71072	Arch Door Glass / Plain
12	71060	Arch Door Faceplate / Black
	71062	Arch Door Faceplate / Nickel
	71144	Arch Door Faceplate / Brushed Nickel
13	H5579	Traditional Door Back w/ Handle (door gasket included)
14	H5578	Arch Door Back w/ Handle (door gasket included)
ASH DRAWER PEDESTAL AND PEDESTAL		
15	H5514	Small & Large Pedestal Rear Block Off Plate w/ Hole
16	H5557	Ash Drawer for Small Pedestal
17	H5564	Ash Plug Remover and Rake
18	H5516	Aluminum Flex Tubing Kit w/ clamp (15" of 4" dia.)
19	H5565	6" x 6-1/2" Rodent Screen

LEGS AND LEG PARTS		
18	H5516	Aluminum Flex Tubing Kit w/ clamp (15" of 4" dia.)
20	H5558	Single Black Cascade Leg
21	H5669	Single Black Olympic Leg
	H5621	Single Nickel Olympic Leg
	H5619	Single Brushed Nickel Olympic Leg
22	H5649	Heatshield / Leg Fastener Kit
23	71110	Bottom Heatshield / S160TGL AND S160AGL
24	H5662	Cascade / Olympic Leg Kit Outside Air Plenum Box
FSB BLOWER PARTS		
25	H8062	FSB700 Blower Only Assembly w/ blower wiring harness
26	H5658	Fan Blade (FSB700)
27	H5657	Fan Cage (FSB700)
28	H8063	FSB700 Blower Only Wire Harness
29	H8064	Snap Switch w/gasket and screws
30	H5742	Speed Control - High Temperature (FSB700)
31	H8065	Control Panel Assembly w/ Snap Switch Housing Assembly
32	H8066	Control Switch (Manual, Off, Automatic)
S160TGL AND S160AGL STOVE PARTS		
33	H5627	Removable Inner Flue Collar Ring
34	F1871	IronStrike® Nameplate Kit w/ Hardware - Nickel
35	H5650	Draft Rod Knob
36	H8081	Ash Block Off - Hearthplate
37	H5661	Cast Iron Ash Plug
38	H5582	1/2 Cut Brick for Ash Removal
39	H5612	Firebrick 4-1/2" x 9" (10 per stove)
40	H5576	Firebrick 4-1/4" x 9" (2 per stove)
41	H5607	Firebrick 2-1/4" x 9" (3 per stove)
42	H3095	Firebrick 2-1/4" x 8-7/8" (1 per stove)
43	H5604	Firebrick 1-1/2" x 9" (1 per stove)
44	H5597	Firebrick 1-1/2" x 8-7/8" (1 per stove)
45	H3104	Front Baffle/Secondary Burn Tube Assembly
46	H3105	Middle/Rear Baffle/Secondary Burn Tube Assembly
47	H3103	Complete Baffle/Secondary Burn Tube Assembly (includes tubes and all mounting hardware)
48	H8017	Baffle Blanket 20" x 11" x 1"
49	H8016	Baffle Board Kit w/ Baffle Blanket
MISCELLANEOUS PARTS		
	71052	Dry Graphite (Apply to door handle and door hinges)
	H5633	Anti Seize 2 gram pouch

REPLACEMENT PARTS - MODELS S160TGL AND S160AGL

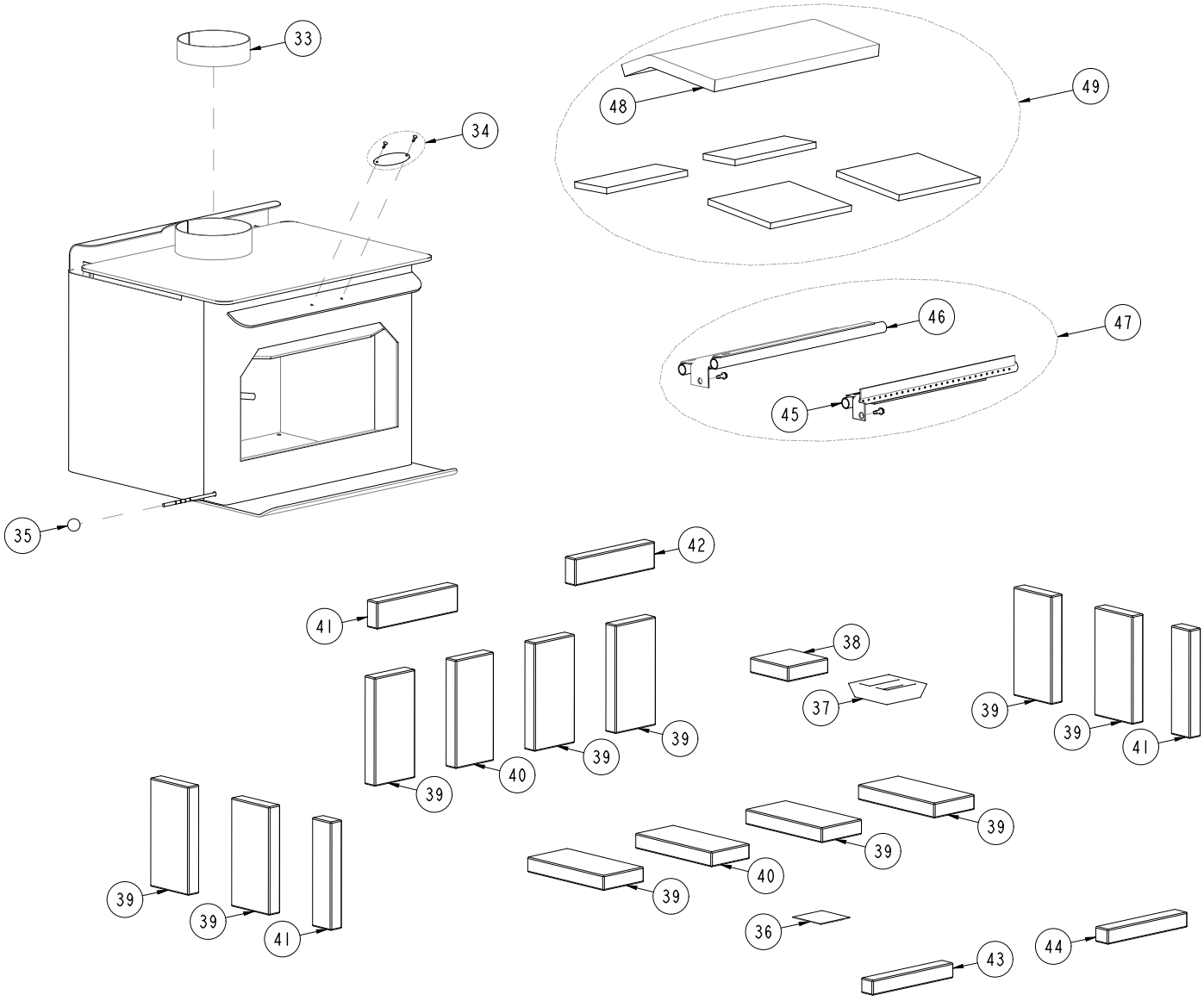

NOTE: DIAGRAMS & ILLUSTRATIONS ARE NOT TO SCALE.

REPLACEMENT PARTS - MODELS S160TGL AND S160AGL

Door Parts

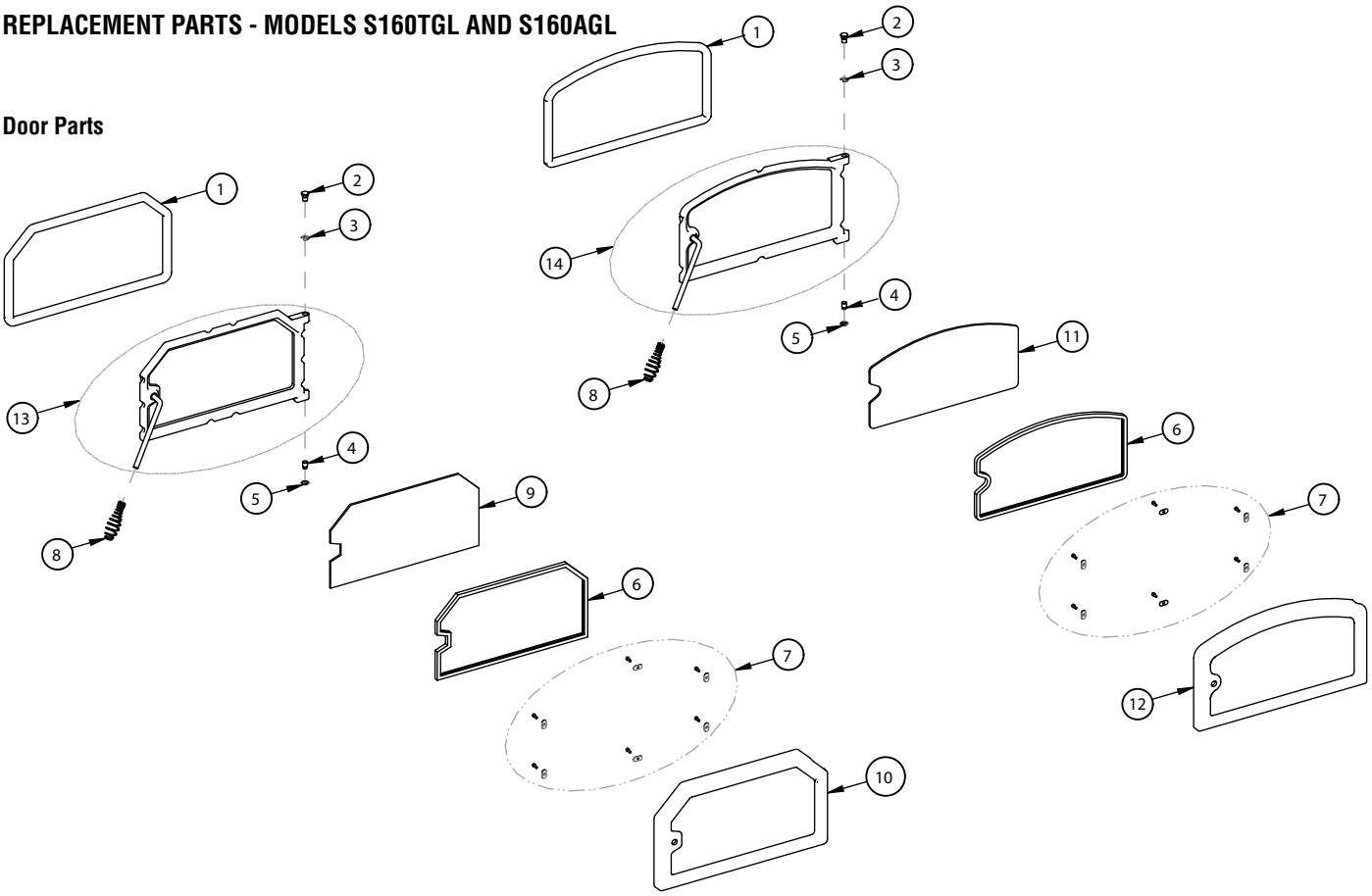

Blower Parts

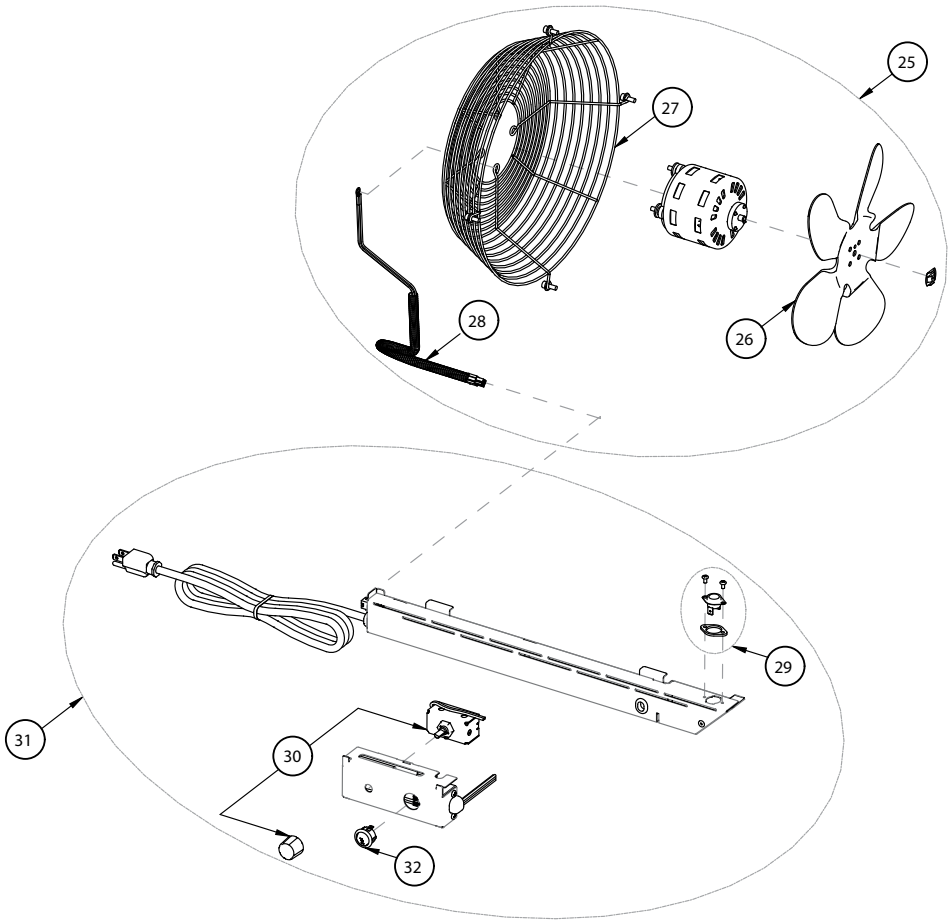

NOTE: DIAGRAMS & ILLUSTRATIONS ARE NOT TO SCALE.

REPLACEMENT PARTS - MODELS S160TGL AND S160AGL

Leg and Leg Parts

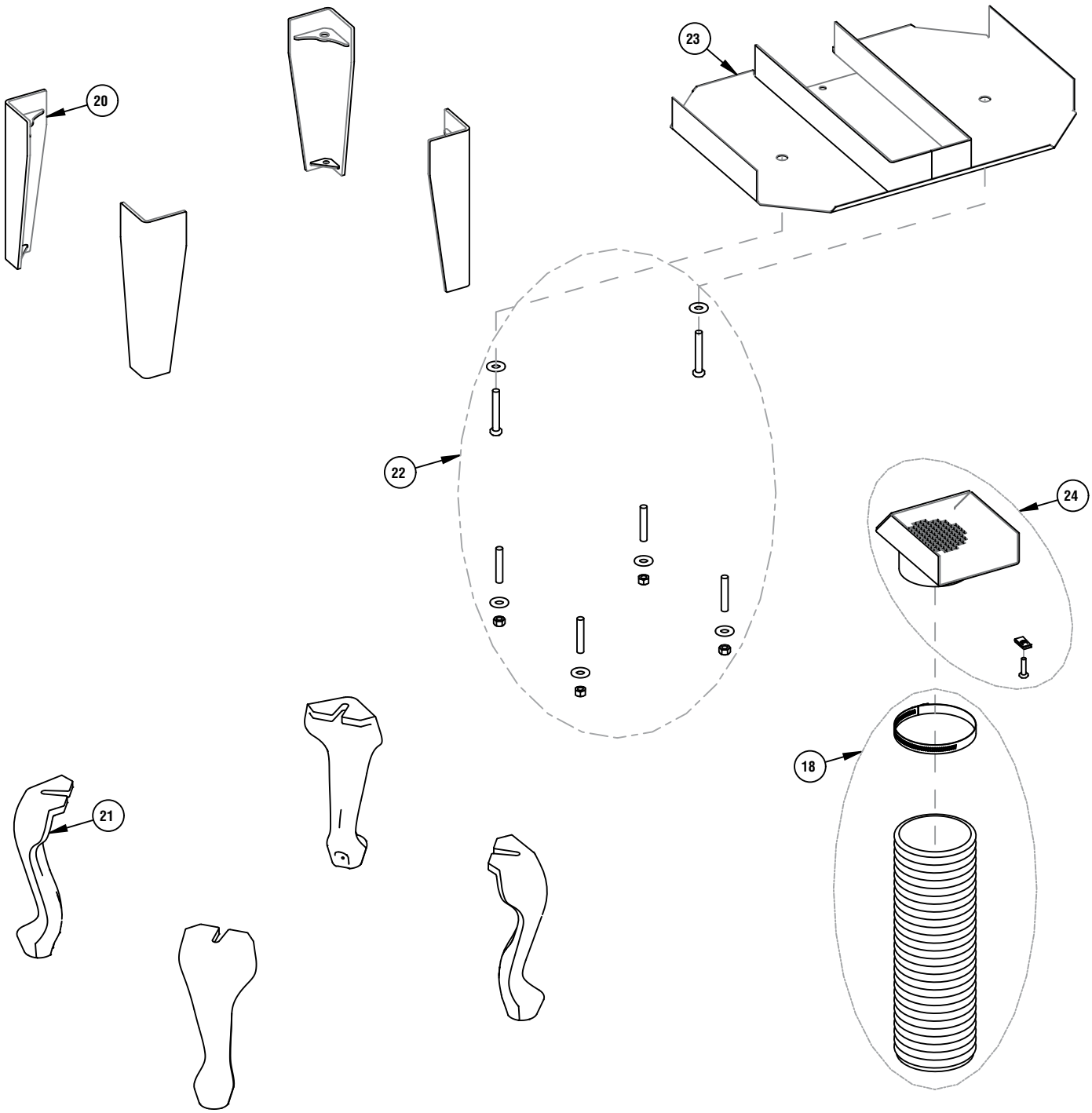

NOTE: DIAGRAMS & ILLUSTRATIONS ARE NOT TO SCALE.

Ash Drawer Pedestal and Pedestal

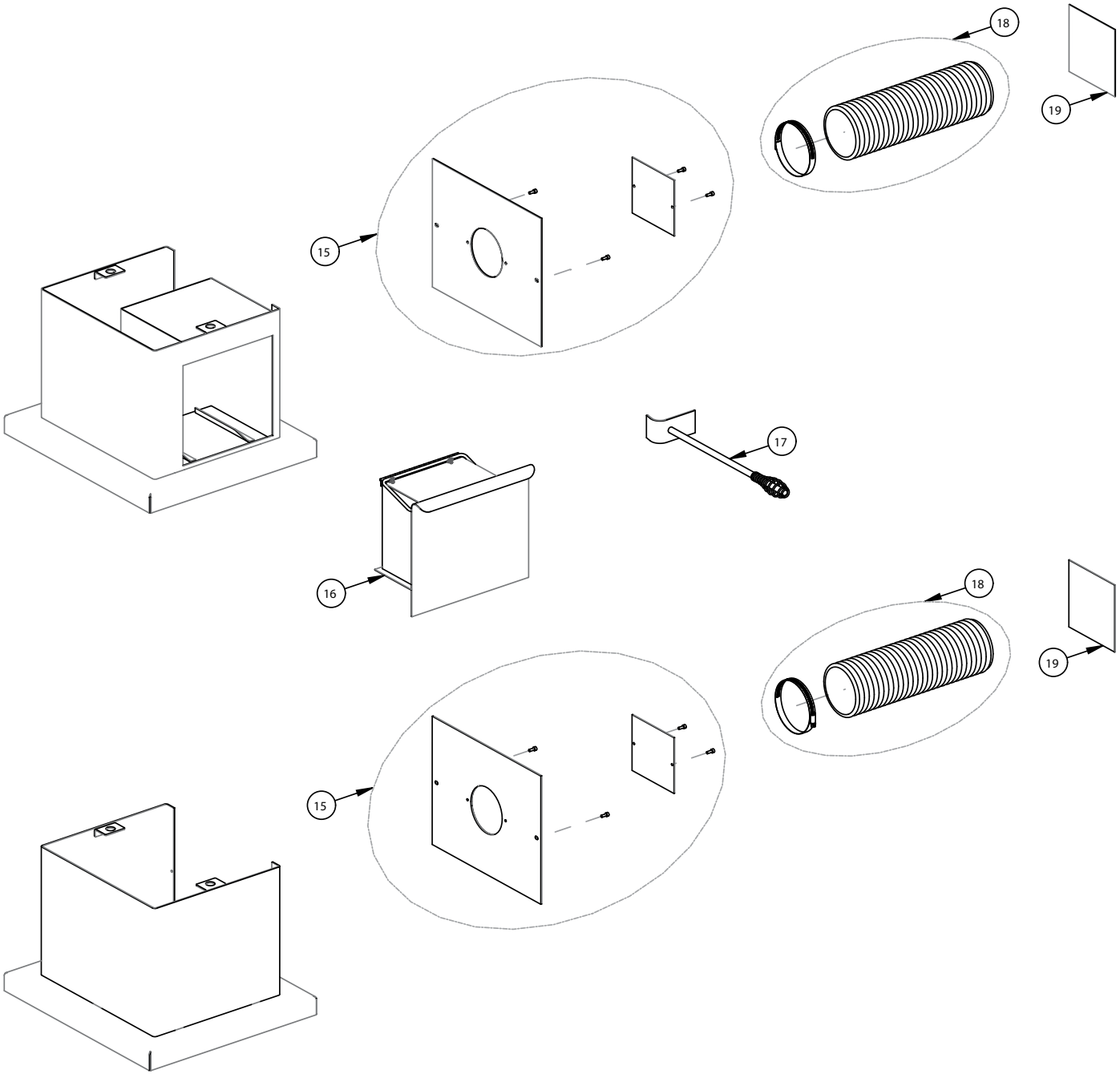

NOTE: DIAGRAMS & ILLUSTRATIONS ARE NOT TO SCALE.

ACCESSORIES - MODELS S160TGL AND S160AGL

Product Reference Information			
Cat. No.	*Description*	*Ship. Weight*	*Ship. Volume*
H7884	S160TGL, Stove / Traditional Black Door / Nickel Nameplate	313 lb.	18.91 cu. ft.
H7883	S160AGL, Stove / Arch Black Door / Nickel Nameplate	313 lb.	18.91 cu. ft.

PEDESTALS (REQUIRED)		
Cat. No.	Model	Description
71108	WS-PED	Pedestal *(ref. form #506033-16)*
71109	WS-PED-ASHD	Ash Drawer Pedestal *(ref. form #506033-15)*
		or LEGS (Required) *(ref. form #506033-14)*
70000	LEG-OLY-B	Olympic Sculptured Black (4 per pkg.)
70002	LEG-OLY-N	Olympic Sculptured Nickel (4 per pkg.)
70008	LEG-OLY-BRN	Olympic Sculptured Brushed Nickel (4 per pkg.)
70003	LEG-CAS-B	Cascade Steel Black (4 per pkg.)
HEAT SHIELD (REQUIRED WITH LEGS)		
71110	WSHS-160	Heat Shield *(ref. form #506033-14)*
BLOWER		
H8873	BLWR-FSB700-SS	Blower Kit, FS Woodstoves
OUTSIDE AIR KITS		
71111	OUTAIRK-L	Outside Air Kit / Leg *(ref. form #506033-18)*
71112	OUTAIRK-P	Outside Air Kit / Pedestal *(ref. form #506033-17)*
MISC.		
71054	Paint Nickel (1/2 Pint)	Paint Nickel (1/2 pint)
H8159	TSPK-B	Touch-Up Paint , Metallic Black, 12 oz. Aerosol
H5308	W-LEGF-LBRKT	Leg Fastening L-Brackets (4 per pkg.) (Tie down kit to be used in mobile or modular homes) *(ref. form #506033-19)*

SAFETY / LISTING LABEL - MODELS S160TGL AND S160AGL - ENGLISH

CONTACT YOUR LOCAL BUILDING OR FIRE OFFICIALS ABOUT RESTRICTIONS AND INSTALLATION INSPECTION IN YOUR AREA.
LISTED ROOM HEATERS, SOLID FUEL TYPE ALSO FOR USE IN MOBILE HOME INSTALLATION (USA ONLY) PURSUANT TO (UM) 84-HUD

Model: S160GL Report Number 14-186	Serial No.	S160GL-

IRONSTRIKE HEAT FOR LIFE

Manufactured By:
INNOVATIVE HEARTH PRODUCTS
1502 14th St NW
Auburn, WA 98001 USA

PFS C US

"PREVENT HOUSE FIRES"

Install and use only in accordance with manufacturer's installation and operating instructions and your local building codes.

CAUTION: Special methods are required when passing chimney through a wall or ceiling, refer to local building codes. Do not connect this unit to a chimney flue serving another appliance.

WARNING: (MOBILE HOME USA Only) An outside air inlet must be provided for combustion, and be unrestricted while unit is in use. Do not install appliance in a sleeping room. The structural integrity of the mobile home floor, walls and ceiling/roof must be maintained. Approval void when label is missing.

Replace glass only with 5mm ceramic.

Model / Modèle: S160TGL ■
S160AGL ■

Tested to/Testé selon: UL 1482, ULC S627

Type Of Fuel: Solid Wood Only

Optional Blower, Part No. H7917

Blower Electrical Rating: 120V, 60 Hz, 1 Amp

Do not route power cord under or in front of appliance.

Burning improper fuel (i.e. Charcoal)can result in carbon monoxide poisoning, which may lead to death!

WARNING: Do Not obstruct the space beneath the heater.

OPERATE ONLY WITH DOOR CLOSED

This wood heater needs periodic inspection and repair for proper operation. Consult the owner's manual for further information. It is against federal regulations to operate this wood heater in a manner inconsistent with the operating instructions in the owner's manual.
Certification test emission value 2.1 grams/hr per 2020 cordwood standard.

Minimum Clearance to Combustible Materials - Inches (millimeters)

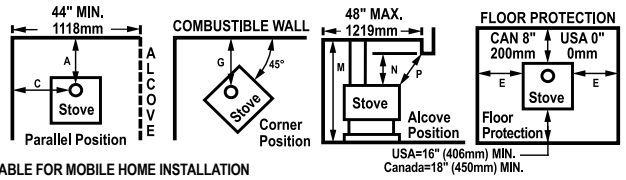

SUITABLE FOR MOBILE HOME INSTALLATION

PIPE	INSTALLATION	A	C	E†	G	M	N❶	P❶
Single Wall	Residential or Alcove	USA-16" CAN-483mm	USA-21" CAN-610mm	8" 200mm	USA-18" CAN-533mm	84" 2134mm	30" 762mm	36" 914mm
Single w/ Pipe Shield	Residential or Alcove	USA-10" CAN-330mm	USA-18" CAN-533mm	8" 200mm	USA-13.5" CAN-419mm	84" 2134mm	30" 762mm	36" 914mm
Double Wall	Residential or Alcove or Mobile Home*	USA-10" CAN-330mm	USA-18" CAN-533mm	8" 200mm	USA-13.5" CAN-419mm	72" 1829mm	30" 762mm	36" 914mm

† USA=8" (200mm) from door opening, Canada=8" (200mm) from sides and back of unit
❶ Dimensions to Stove Body * Mobile Home - USA only

ALCOVE DIMENSIONS (single wall pipe): Minimum 48"(1219mm) width, maximum 48" (1219mm) depth.
ALCOVE DIMENSIONS (double wall pipe): Minimum 44"(1117mm) width, maximum 48" (1219mm) depth.

FLOOR PROTECTOR: The hearth and/or floor protection must be a non-combustible hearth/floor protector with a minimum thickness of 3/8" (9.5mm), extending beneath the heater and to the front, sides, and rear as indicated.

NOTICE: A header constructed of COMBUSTIBLE material must meet both N & P clearances. All mobile home installations require outside air kits (OAK).

Clearance dimensions are to 6" (152mm) flue collar. If a single wall connector pipe with shield is used, a 1 inch air space is needed between pipe and shield. Shield attaches to rear of stove pipe and must run from stove top to ceiling. Pipe shield shall be UL listed.

CHIMNEY & CONNECTOR: Minimum 6" diameter, minimum 24 MSG black steel connector pipe with listed factory-built chimney suitable for use with solid fuels or masonry chimney. Horizontal connection not tested, refer to local building codes for installation. Restrictions apply! Read instructions before installing.

Minimum alcove width between combustibles: 44" with double wall pipe and 48" all other installations.

MOBILE HOME approved Class A - UL 103HT chimneys and double wall connectors:

- Security
- Metal Fab
- Projet
- Ameri-Tec
- Jakes Evans
- Metalbestos
- Dura-Vent
- Industrial Chimney

RESIDENTIAL chimney systems must be from the same brands as listed for mobile homes but connector pipe may be double wall, single wall or single wall with shield as listed above.

Connector pipe and chimney must be of the same brand.

COMPONENTS REQUIRED FOR INSTALLATIONS: Legs AND Bottom Heat Shield or Pedestal Base attached as shown in the installation instructions. If optional blower is NOT used, Rear Heat Shield Block Off Plate shall be installed.



CAUTION: HOT WHILE IN OPERATION. DO NOT TOUCH, KEEP CHILDREN, CLOTHING AND FURNITURE AWAY. CONTACT MAY CAUSE SKIN BURNS. SEE NAME-PLATE AND INSTRUCTIONS. DO NOT OVERFIRE - IF HEATER OR CHIMNEY CONNECTOR GLOWS, YOU ARE OVERFIRING. INSPECT AND CLEAN CHIMNEY FREQUENTLY - UNDER CERTAIN CONDITIONS OF USE, CREOSOTE BUILDUP MAY OCCUR RAPIDLY. DO NOT USE GRATE OR ELEVATE FIRE - BUILD WOOD FIRE DIRECTLY ON HEARTH. FEED DOOR MUST BE CLOSED DURING FIRING EXCEPT WHEN ADDING FUEL. KEEP ASH DOOR CLOSED TO AVOID EXCESS HEAT. DANGER: RISK OF ELECTRICAL SHOCK. DISCONNECT POWER BEFORE SERVICING UNIT. FOR USE WITH SOLID WOOD FUEL ONLY.

Date of Manufacture / Date De Fabrication

2018	2019	2020	JAN. JANV	FEB. FEVR	MAR. MARS	APR AVR	MAY MAI	JUN JUIN	JUL JUIL	AUG AOÛT	SEP SEPT	OCT OCT	NOV NOV	DEC DEC
■	■	■	■	■	■	■	■	■	■	■	■	■	■	■

U.S. ENVIRONMENTAL PROTECTION AGENCY
Certified to comply with 2020 cordwood standard

Part No. 900902-01 Rev. 0, 08/2018 DO NOT REMOVE THIS LABEL Made in U.S.A.

Innovative Hearth Products
IronStrike® Brand Wood Burning Stove and Insert
Limited Lifetime Warranty

THE WARRANTY

Innovative Hearth Products ("IHP") Limited Lifetime Warranty warrants your IronStrike® Brand Wood Burning Stove or Insert ("Product") to be free from defects in materials and workmanship at the time of manufacture. The Product body, firebox and ceramic glass carry the Limited Lifetime Warranty. Ceramic glass carries the Limited Lifetime Warranty against thermal breakage only. After installation, if covered components manufactured by IHP are found to be defective in materials or workmanship during the Limited Lifetime Warranty period and while the Product remains at the site of the original installation, IHP will, at its option, repair or replace the covered components. If repair or replacement is not commercially practical, IHP will, at its option, refund the purchase price or wholesale price of the IHP product, whichever is applicable. IHP will also pay IHP prevailing labor rates, as determined in its sole discretion, incurred in repairing or replacing such components for up to five years. THERE ARE EXCLUSIONS AND LIMITATIONS to this Limited Lifetime Warranty as described herein.

COVERAGE COMMENCEMENT DATE

Warranty coverage begins on the date of purchase. In the case of new home construction, warranty coverage begins on the date of first occupancy of the dwelling or six months after the sale of the Product by an independent IHP dealer/distributor, whichever occurs earlier. The warranty shall commence no later than 24 months following the date of product shipment from IHP, regardless of the installation or occupancy date.

EXCLUSIONS AND LIMITATIONS

This Limited Lifetime Warranty applies only if the Product is installed in the United States or Canada and only if operated and maintained in accordance with the printed instructions accompanying the Product and in compliance with all applicable installation and building codes and good trade practices.

This warranty is non-transferable and extends to the original owner only. The Product must be purchased through a listed supplier of IHP and proof of purchase must be provided. The Product body and firebox carry the Limited Lifetime Warranty from the date of installation. Vent components, trim components and paint are excluded from this Limited Lifetime Warranty. The following do not carry a Limited Lifetime Warranty but are warranted as follows:

- **Cast Iron Heat Exchanger** – Replacement for five years from the date of installation
- **Cast iron parts** – Replacement for one year from the date of installation
- **Catalyst** – Carries a separate warranty. Refer to the warranty certificate provided for that part
- **Electrical components** – Repair or replacement for one year from date of installation
- **Gaskets** – Replacement for one year from the date of installation.
- **Gold & nickel plating** – Replacement for two years from date of installation. Excludes tarnishing
- **Refractory & screens** – Replacement for two years from date of installation. Excludes hairline cracks
- **Removable air tubes** – Repair or replacement for seven years from date of installation. IHP prevailing labor rates for years one through five.
- **Labor coverage** – Prevailing IHP labor rates apply for the warranty period of the component, unless otherwise noted

Parts not otherwise listed carry a 90 day warranty from the date of installation.

Whenever practicable, IHP will provide replacement parts, if available, for a period of 10 years from the last date of manufacture of the Product.

IHP will not be responsible for: (a) damages caused by normal wear and tear, accident, riot, fire, flood or acts of God; (b) damages caused by abuse, negligence, misuse, or unauthorized alteration or repair of the Product affecting its stability or performance. (The Product must be subject to normal use with approved fuels listed in the Operation Manual provided with the product. Fuel products with abnormal burning characteristics, including but not limited to fuel such as driftwood, coal or plywood and wood products using a binder may burn at excessive temperatures and may cause damage to the Product or may cause it to function improperly; IHP stoves, inserts and high efficiency EPA fireplaces are approved for burning dry seasoned wood only.); (c) damages caused by failing to provide proper maintenance and service in accordance with the instructions provided with the Product; (d) damages, repairs or inefficiency resulting from faulty installation or application of the Product.

Coverage of this Limited Lifetime Warranty is conditional upon the appliance being operated without the use of grates, irons or any other method to elevate the fire.

IHP is not responsible for inadequate system draft caused by air conditioning and heating systems, mechanical ventilation systems, or general construction conditions which may generate negative air pressure in the room in which the appliance is installed. Additionally IHP assumes no responsibility for smoking conditions caused by inadequate chimney height, adjoining trees or buildings, adverse wind conditions or unusual environmental factors and conditions. Certain IHP Products are listed for use with Security Chimneys International, Ltd. chimney systems only. Use of chimney components other than that specified in the Product manual will void the Product warranty.

This Limited Lifetime Warranty covers only parts and labor as provided herein. In no case shall IHP be responsible for materials, components or construction which are not manufactured or supplied by IHP or for the labor necessary to install, repair or remove such materials, components or construction. Additional utility bills incurred due to any malfunction or defect in equipment are not covered by this Limited Lifetime Warranty. All replacement or repair components will be shipped F.O.B. from the nearest stocking IHP factory.

LIMITATION ON LIABILITY

It is expressly agreed and understood that IHP's sole obligation and the purchaser's exclusive remedy under this warranty, under any other warranty, expressed or implied, or in contract, tort or otherwise, shall be limited to replacement, repair, or refund, as specified herein.

In no event shall IHP be liable for any incidental or consequential damages caused by defects in the Product, whether such damage occurs or is discovered before or after replacement or repair, and whether such damage is caused by IHP's negligence. IHP has not made and does not make any representation or warranty of fitness for a particular use or purpose, and there is no implied condition of fitness for a particular use or purpose.

IHP makes no expressed warranties except as stated in this Limited Lifetime Warranty. The duration of any implied warranty is limited to the duration of this expressed warranty.

No one is authorized to change this Limited Lifetime Warranty or to create for IHP any other obligation or liability in connection with the Product. Some states and provinces do not allow the exclusion or limitation of incidental or consequential damages, so the above limitations or exclusions may not apply to you. The provisions of this Limited Lifetime Warranty are in addition to and not a modification of or subtraction from any statutory warranties and other rights and remedies provided by law.

INVESTIGATION OF CLAIMS AGAINST WARRANTY

IHP reserves the right to investigate any and all claims against this Limited Lifetime Warranty and to decide, in its sole discretion, upon the method of settlement.

To receive the benefits and advantages described in this Limited Lifetime Warranty, the appliance must be installed and repaired by a licensed contractor approved by IHP.

Contact IHP at the address provided herein to obtain a listing of approved dealers/distributors. **IHP shall in no event be responsible for any warranty work done by a contractor that is not approved without first obtaining IHP's prior written consent.**

HOW TO REGISTER A CLAIM AGAINST WARRANTY

In order for any claim under this warranty to be valid, you must contact the IHP dealer/distributor from which you purchased the product. If you cannot locate the dealer/distributor, then you must notify IHP in writing. IHP must be notified of the claimed defect in writing within 90 days of the date of failure. Notices should be directed to the IHP Warranty Department at 1769 East Lawrence Street; Russellville, AL 35654 or visit our website at WWW.IRONSTRIKE.US.COM.

Printed in U.S.A. © 2013 Innovative Hearth Products

P/N 900205-00, Rev. B 02/2018

Innovative Hearth Products
1769 East Lawrence Street • Russellville, AL 35654

WARRANTY

Your wood appliance is covered by a limited warranty (provided with the appliance). Please read the warranty to be familiar with its coverage.

Retain this manual. File it with your other documents for future reference.

REPLACEMENT PARTS

See ***Page 24*** for a complete replacement parts list. Use only parts supplied from the manufacturer.

Normally, all parts should be ordered through your IHP distributor or dealer. Parts will be shipped at prevailing prices at time of order.

When ordering repair parts, always give the following information:

1. The model number of the appliance.
2. The Serial Number of the appliance.
3. The part number.
4. The description of the part.
5. The quantity required.
6. The installation date of the appliance.

If you encounter any problems or have any questions concerning the installation or application of this system, please contact your dealer.

Innovative Hearth Products, LLC (IHP)
1769 East Lawrence Street
Russellville, AL 35654
IronStrike.us.com

PRODUCT REFERENCE INFORMATION

We recommend that you record the following important information about your appliance. If you did not purchase your appliance directly from an IHP dealer, then contact us at IronStrike.us.com to find your nearest IHP dealer who will answer your questions or address your concerns.

Model Number _____

Serial Number _____

Date Installed _____

Your Dealer's Name _____

NATIONAL FIREPLACE INSTITUTE NFI CERTIFIED www.nficertified.org

We recommend that our woodburning hearth products be installed and serviced by professionals who are certified in the U.S. by the National Fireplace Institute® (NFI) as NFI Woodburning Specialists or who are certified in Canada by Wood Energy Technical Training (WETT).

Wood Energy Technical Training www.wettinc.ca

Innovative Hearth Products (IHP) reserves the right to make changes at any time, without notice, in design, materials, specifications, and prices, and also to discontinue colors, styles, and products. Consult your local distributor for fireplace code information.

INNOVATIVE HEARTH PRODUCTS

Printed in U.S.A. © 2018 Innovative Hearth Products

P900901-00

IRONSTRIKE®
HEAT FOR LIFE

INSTALLATION AND OPERATION MANUAL

Free-Standing
EPA Certified
Wood-Burning Stoves

Save These Instructions
For Future Reference

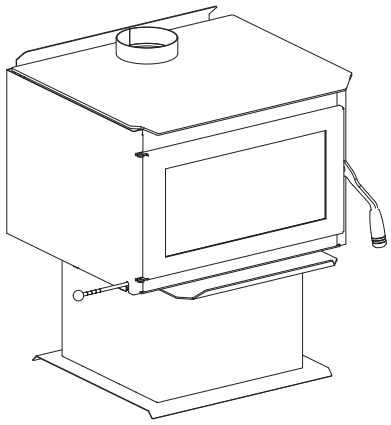

P/N 900916-00, Rev. NC, 08/2018

P900916-00

Wood-Burning Stove
Model Tahoma™ 1600GL

PFS® C US

Report # 14-193

NATIONAL FIREPLACE INSTITUTE NFI CERTIFIED
www.nficertified.org

We recommend that our woodburning hearth products be installed and serviced by professionals who are certified in the U.S. by the National Fireplace Institute® (NFI) as NFI Woodburning Specialists or who are certified in Canada by Wood Energy Technical Training (WETT).

Wood Energy Technical Training www.wettinc.ca

A French manual is available upon request. Order P/N 900916-01.

Ce manuel d'installation est disponible en francais, simplement en faire la demande. Numéro de la pièce 900189-00.

This appliance must be properly installed and operated in order to prevent the possibility of a house fire. Please read this entire installation and operation manual before installing and using your wood stove. Failure to follow these instructions could result in property damage, bodily injury or even death. Contact your local building or fire officials to obtain a permit and information on any installation requirements and inspection requirements in your area.

⚠ WARNING

- **Hot! Do not touch! The glass and surfaces of this appliance will be hot during operation and will retain heat for a while after shutting off the appliance. Severe burns may result.**
- **Carefully supervise children in the same room as appliance.**

Agency Copy

CONGRATULATIONS!

When you purchased your new wood stove, you joined the ranks of thousands of individuals whose answer to their home heating needs reflects their concern for aesthetics, efficiency and our environment. We extend our continued support to help you achieve the maximum benefit and enjoyment available from your new wood stove.

Thank you for selecting an Innovative Hearth Products, LLC (IHP) Stove as the answer to your home supplemental heating needs.

TABLE OF CONTENTS

Using This Manual 2
Important Safety Information 3
Testing Information 4
Draft Requirements 4
Selecting the Proper Venting System 4
Negative Pressure Warning 5
Clearances to Combustibles 6-7
Floor Protection 6
Chimney and Connector 6
Components 6
Installation Clearances 7
Specifications 8
Typical Installation Figures 9
Chimney Installation 10
Manufactured (mobile) Home Installations 10
Chimney - Wall Pass-Through Requirements 11
Outside Combustion Air Kit Installation 12
Brick Installation 13
Post Installation Checks 15
Paint Curing 15
Burn-In Period 15
Operating Hints 15
Door Operation 15
Starting and Maintaining a Fire 16
Fuel 17
Getting the Most Out of Your Stove 18
Maximizing Your Stove's Overall Efficiency 18
Achieving Clean, Long Burns 18
Optional Blower Kit 19
Do's and Don'ts 20
Smoke Detector Recommended 20
Carbon Monoxide Monitor Recommended 20
Maintenance 21
Creosote 22
Troubleshooting 23
Replacement Parts Lists 24
Accessories 25
Safety / Listing Label 26
Warranty 27
Product Reference Information 28

USING THIS MANUAL

Please read and carefully follow all of the instructions found in this manual. Please pay special attention to the safety instructions provided in this manual.

PRODUCT IS SUBJECT TO CHANGE WITHOUT NOTICE

IMPORTANT SAFETY AND WARNING INFORMATION

READ THIS MANUAL IN ITS ENTIRETY AND UNDERSTAND THESE RULES TO FOLLOW FOR SAFETY.

1. When this room heater is not properly installed, a house fire may result. To reduce the risk of fire, follow the installation instructions. Contact local building or fire officials about restrictions and installation inspection requirements in your area.
2. Wear gloves during installation to avoid injury from sharp edges on the stove and/or its parts.
3. This unit is designed and engineered to burn only dry, well-seasoned wood. Burning wet wood will greatly reduce the stove's efficiency, produce excessive amounts of smoke and can cause dangerous chimney fires due to creosote build-up.
4. Before opening the door, the draft control must be fully open to avoid possible combustion flash (ignition of hot volatile gases as the door is opened).
5. Never use gasoline, gasoline-type lantern fuel, kerosene, charcoal lighter fluid, or similar liquids to start or 'freshenup' a fire in this heater. Keep all such liquids well away from the heater while it is in use. DO NOT USE CHEMICALS OR FLUIDS TO START THE FIRE.
6. While burning, fuel utilizes oxygen from the air in the room. Be sure to allow an adequate amount of fresh air into the room where the stove is burning.
7. The outside surface of the stove will be hot while burning properly and can set items like clothing and curtains on fire. Keep furnishings and other combustible materials away from the stove. Using the heat from the stove to dry wet clothing can be hazardous if clothes are placed too near the surface of the stove.
8. HOT WHILE IN OPERATION. KEEP CHILDREN, CLOTHING FURNISHINGS AND COMBUSTIBLE MATERIAL A CONSIDERABLE DISTANCE AWAY. CONTACT MAY CAUSE SKIN BURNS. Do not allow children to play near the stove without close supervision. Do not touch the stove while it is burning. Use extreme caution while the unit is in use. Surface temperatures become dangerously hot and can cause serious burns.
9. Do not allow anyone to operate the stove who is not familiar with the operating instructions.
10. Attempts to achieve heat output rates that exceed stove design specifications can result in permanent damage to the stove. Never leave your stove unattended on high burn rates. This may cause overfiring. Overfiring the stove may cause a house fire. If the stove glows, you are overfiring.
11. Keep a water hose or hand-operated fire extinguisher close for safety.
12. Smoke Detectors - Since there are always several potential sources of fire in any home, we recommend installing smoke detectors. If possible, install the smoke detector in a hallway adjacent to the room (to reduce the possibility of occasional false activation from the heat produced by the stove). If your local code requires a smoke detector be installed within the same room, you must follow the requirements of your local code. Check with your local building department for requirements in your area.
13. Inspect your chimney at least once a month during the burning season to check for soot and creosote accumulations. Any accumulations over 1/8" thick should be removed by a professional chimney sweep. Do not attempt to burn out heavy creosote accumulations with a hot fire. If large accumulations are occurring, review your burning procedures.
14. If a creosote fire should develop, the fire department should be called immediately and then attempts should be made to control the fire until assistance arrives. If a "runaway" fire should develop causing over-heating of the stove, the door and draft regulators should be closed immediately. The fire should die down once deprived of oxygen. After a severe chimney fire, the complete chimney system should be checked before further use.
15. Do Not Use Grate Or Elevate Fire - Build Wood Fire Directly On Hearth (firebrick). Do not use andirons or other methods of supporting the fuel.
16. Please read this entire manual before you install and use your new room heater. Failure to follow instructions may result in property damage, bodily injury, or even death.
17. Check all local building and safety codes before installation. The installation instructions and appropriate code requirements must be followed exactly and without compromise. In the absence of local codes the following standards and codes must be followed.
18. In the U.S.A, install in accordance with the National Fire Protection Association's Code, NFPA 211, Standards for Chimneys, Fireplaces, Vents and Solid-Fuel-Burning Appliances, or similar regulations, may apply to the installation of a Solid-Fuel-Burning appliance in your area. In Canada, the guideline is established by the CSA Standard, CAN/CSA-B365-M93, Installation Code for Solid-Fuel-Burning Appliances and Equipment.
19. DO NOT CONNECT TO OR USE IN CONJUNCTION WITH ANY AIR DISTRIBUTION DUCTWORK UNLESS SPECIFICALLY APPROVED FOR SUCH INSTALLATIONS.
20. WARNING: BURNING IMPROPER FUEL (I.E. CHARCOAL) CAN RESULT IN CARBON MONOXIDE POISONING, WHICH MAY LEAD TO DEATH!
21. Carbon Monoxide Poisoning – Early signs of carbon monoxide poisoning resemble the flu with headaches, dizziness, or nausea. If you have these signs, get fresh air at once! Have the heater inspected by a qualified service technician. Some people are more affected by carbon monoxide than others. These include pregnant women, people with heart or lung disease or anemia, those under the influence of alcohol, and those at high altitudes.
22. Failure to use manufacturer provided parts, variations in techniques and construction materials or practices other than those described in this manual may create a fire hazard and void the limited warranty.
23. Do not make any make-shift compromises during installation. Any modification or alteration may result in damage to the appliance or dwelling and will void the warranty, certification and listings of this unit.
24. These appliances are designed as supplemental heaters. Therefore, it is advisable to have an alternate heat source when installed in a dwelling.

25. **Do Not Overfire – If Heater or Chimney Connector Glows, You Are Overfiring.**
26. **DO NOT CONNECT THIS UNIT TO A CHIMNEY FLUE SERVING ANOTHER APPLIANCE.**
27. **DO NOT BURN GARBAGE OR FLAMMABLE FLUIDS SUCH AS GASOLINE, NAPHTHA OR ENGINE OIL.**
28. **This wood heater has a manufacturer-set minimum low burn rate that must not be altered. It is against federal regulations to alter this setting or otherwise operate this wood heater in a manner inconsistent with operating instructions in this manual.**

⚠ WARNING

This product can expose you to chemicals including Carbon Black, which is known to the State of California to cause cancer, and Carbon Monoxide, which is known to the State of California to cause birth defects or other reproductive harm. For more information go to www.P65Warnings.ca.gov

TESTING INFORMATION

This manual describes the installation and operation of these non-catalytic wood heaters. These heaters meet the U.S. Environmental Protection Agency's emissions limits, and are compliant with 2015 EPA Phase III particulate emission standards. These heaters have been developed, tested and constructed in accordance with the requirements of UL 1482, ULC S627 and HUD standards and are listed by PFS Corporation. These heaters have been approved for residential and mobile home installations.

Model	Emission Rate	EPA Test Range BTU/hr	Max. Output BTU/hr	EPA Default Efficiency
T1600GL	2.1 g/hr	16,000 – 42,600	55,600	70.0%

** Default - Category rating as assigned by the EPA. The estimated efficiency is as follows: 63% (non-catalyst equipped), 72% (catalyst-equipped), and 78% (wood pellets). See § 60.536(i)(3) at www.epa.gov.*

DRAFT REQUIREMENTS

This appliance is dependent upon a properly functioning chimney for optimum performance. It is a high efficiency appliance that loses much less heat up the chimney than older appliances and fireplaces. For this reason it is important to match the stove to the chimney. The chimney has two functions:

1. It draws combustion air into the appliance (without air, no fuel will burn) and
2. It exhausts combustion by-products. Your new appliance is what is known as a "natural draft" appliance.

The appliance depends solely on the natural draft of the chimney system to draw combustion air into the unit. Draft is the force that moves air from the appliance up into the chimney. The amount of draft in your chimney depends on the length of the chimney, local geography, nearby obstructions and other factors. Too much draft may cause excessive temperatures in the appliance (overfiring). Slow or inadequate draft equals poor combustion and possible smoking problems.

The following are some conditions that may contribute to poor chimney draft:

1. A chimney too large for your appliance.
2. A chimney with not enough height to produce adequate draft.
3. A chimney with excessive height (this may allow exhaust to cool too much before exiting, which will stall the rate the exhaust exits).
4. Offsets in the venting system are too restrictive (see *Chimney Guidelines)*.

Inadequate draft will cause the appliance to leak smoke into the room through the stove and the chimney connector joints.

Excessive draft may cause an uncontrollable burn or a glowing red stove or chimney part.

Overfiring Damage - If the heater or chimney connector glows, you are overfiring. Other symptoms may include: Cracking, warping or burning out of components, stove glass may develop a haze, which will not come off with cleaning.

Overfiring of a stove is a condition where excessive temperatures are reached, beyond the design capabilities of the appliance. The damage that occurs from overfiring is not covered under the manufacturer's limited warranty.

Also see *Troubleshooting* on ***Page 23***.

SELECTING THE PROPER VENTING SYSTEM

The appliance is merely one component of a larger system. The other equally important component is the venting system. This is necessary for achieving the required flow of combustion air to the fire chamber and for safely removing unwanted combustion by-products from the appliance. If the venting system's design does not promote these ends, the system may not function properly. Poorly functioning venting systems may create performance problems as well as be a safety hazard. **A draft test should read greater than .04' W.C. (inches water column) and less than .08" W.C**. As per NFPA-211 standard (see paragraph below), the installer must take into account all variables within the installation and install the appliance in such a manner that satisfies the draft requirements of the appliance. See *Chimney Guidelines* below to assist you in selecting the proper venting system for your installation.

American National Standards Institute ANSI/NFPA 211, Standard for Chimneys, Fireplaces, Vents, and Solid Fuel-Burning Appliances - See Draft Section: A chimney or vent shall be so designed and constructed to develop a flow sufficient to completely remove all flue and vent gases to the outside atmosphere. The venting system shall satisfy the draft requirements of the connected appliance in accordance with the manufacturer's instructions.

Chimney Guidelines:

- This appliance requires approximately 12 feet minimum of "effective draw" provided by the venting system. As a rule of thumb, every 90 degree total direction change in the venting will result in a loss of approximately 5 feet of "effective draw." Example: If two 45 degree offsets are used, subtract 5 feet from the actual vertical vent height to determine your "effective draw." In this case if you had 14 feet of vertical vent, the effective draw would only be approximately 9 feet (14 ft. - 5 ft. = 9 ft.), therefore it may be necessary to add additional height to the venting system.
- Do not install an offset within the first two feet above the flue outlet on the appliance.
- In well insulated and weather tight homes, it may be difficult to establish a good draft up your chimney. The poor draft is caused by a shortage of air in the house. In this situation an Outside Air Kit may need to be installed *(See Negative Pressure Warning on* ***Page 5*** *and Outside Combustion Air on* ***Page 12****)*.

Chimney Height Requirements

The chimney must extend 3' (.92m) above the level of roof penetration and a minimum of 2' (.61m) higher than any roof surface within 10' (3m) *(see **Figure 1**)*. Check with your local building officials for additional requirements for your area.

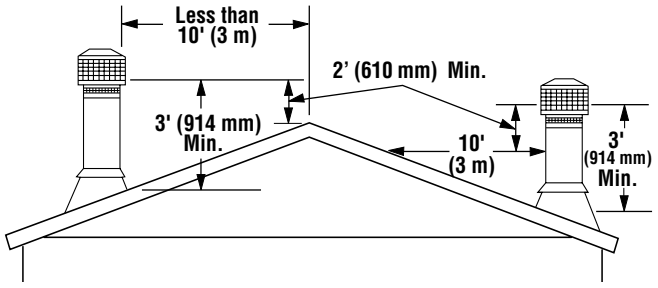

***Figure 1** - Chimney Height Requirements*

To pass inspection in nearly any jurisdiction, the chimney must meet both safety and exhaust flow requirements. The (3' by) 2' by 10' rule applies to both masonry and factory-built chimneys.

**** Ref. USA - National Standard, NFPA 211-latest edition and Canada National Standard CSA B365-01-latest edition. Vents installed with a listed cap shall terminate in accordance with the terms of the cap's listings.***

NEGATIVE PRESSURE WARNING

This appliance is not designed to be operated in a negative pressure. In very airtight homes with large kitchen exhaust fans, furnace cold air returns, fresh air exchange systems and any other air system in close proximity to the heating appliance may create a negative pressure in the same room as the heating appliance. This can create dangerous back drafting of the stove and chimney joints, drawing combustion by-products into the home. Be sure your home has adequate makeup air to eliminate negative pressures caused by the above-mentioned sources. Outside air connected to the appliance probably will not resolve such a problem as the appliance is not the source of negative pressure. IHP accepts no liability for damages resulting from negative pressures described here.

Ventilation Requirements - Provide adequate air for combustion. The fresh air requirements of this appliance must be met within the space where it will be installed. Ventilation is essential when using a Solid-Fuel-Burning heater. In well insulated and weather tight homes, it may be difficult to establish a good draft up the chimney (caused by a shortage of air in the home). The lack of air is caused by many common household appliances which exhaust air from the home (such as a furnace, heat pump, air conditioner, clothes dryer, exhaust fans, fireplaces, and other fuel burning appliances). Also, the combustion process of this heater uses oxygen from inside the dwelling. If the available fresh air delivery in the dwelling is insufficient to support the demands of these appliances, problems can result (i.e. excessive negative pressure can develop in the dwelling which will affect the rate at which this appliance can draft thus resulting in performance problems. To correct this problem it may help to open a window (preferably on the windward side of the house) or install an optional outside air kit.

CLEARANCES TO COMBUSTIBLES

WARNING: BE ABSOLUTELY SURE THE DISTANCE BETWEEN THE HEATER AND THE SURFACE OF ANY COMBUSTIBLE CONSTRUCTION IS NOT LESS THAN SHOWN IN THE FIGURES ON PAGE 7.

Floor Protection

USA - The floor in front and under the heater must be protected with noncombustible material. The covering must extend 16" in front of the door opening of the heater and 8" to either side of the door opening.

Canada - The floor in front and under the heater must be protected with noncombustible material. The covering must extend 450 mm in front of the door opening of the heater and 200 mm to either side of the stove body and 200 mm to the rear or to the wall, whichever is smaller.

USA and Canada - A chimney connector / venting extends horizontally over the floor, protection must also cover the floor under the connector / venting and at least 2" (51 mm) to either side.

CHIMNEY AND CONNECTOR

Minimum 6" diameter, minimum 24 MSG black steel connector pipe with UL103HT listed factory-built chimney suitable for use with solid fuels or masonry chimney. Horizontal connection not tested, refer to local building codes for installation. See installation instructions for details. Restrictions apply! Read instructions before installing.

Residential chimney systems must be from the same brands as listed for mobile homes but connector pipe may be double wall, single wall or single wall with shield as listed above.

This appliance may be vented into a code-approved masonry chimney with flue liner.

WARNING: CHIMNEY CONNECTOR MUST BE IN GOOD CONDITION AND KEPT CLEAN. DO NOT INSTALL DAMAGED PARTS.

All of the stove connector pipe used must be of the same brand. The chimney that the stove pipe transitions into may be a different brand. Other than the transition of the stove pipe into the chimney, do Not mix different brand vent components. Install all vent components per vent manufacturer's instructions.

The chimney connector shall not pass through an attic or roof space, closet or similar concealed space, or a floor, or ceiling. Where passage through a wall, or partition of combustible construction is desired, the installation shall conform to CAN/CSA-B365, Installation Code for Solid-Fuel-Burning Appliances and Equipment.

There must be an effective vapor barrier at the location where the chimney or other component penetrates to the exterior of the structure. Follow the vent manufacturer's detailed instructions.

IMPORTANT NOTE: See *Draft Requirements* and *Selecting a Proper Venting System* on ***Page 4*** to assist you in choosing the proper venting system for your installation.

Clearance dimensions are to flue collar. If a single wall connector pipe with shield is used, a 1 inch air space is needed between pipe and shield. Shield attaches to rear of stove pipe and must run from stove top to ceiling. Pipe shield shall be UL listed.

NOTE: DIAGRAMS & ILLUSTRATIONS ARE NOT TO SCALE.

INSTALLATION CLEARANCES - REFER TO *FIGURES 2, 3 AND 4*

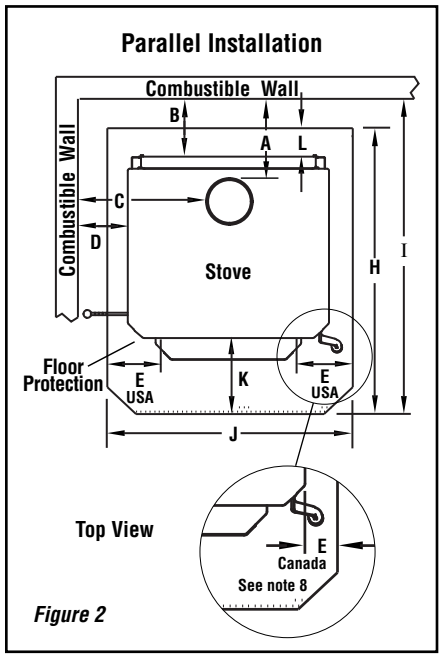

Figure 2

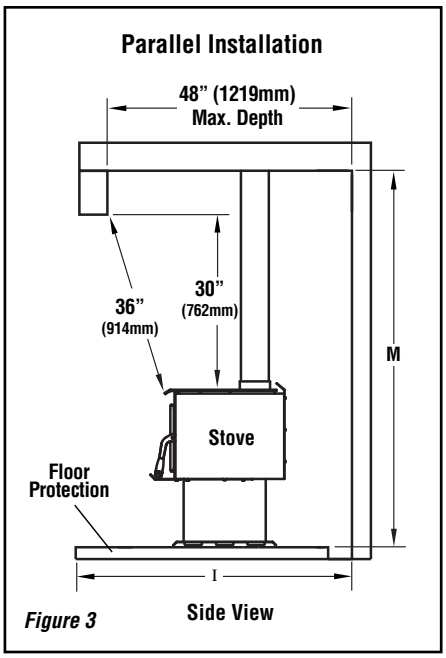

Figure 3

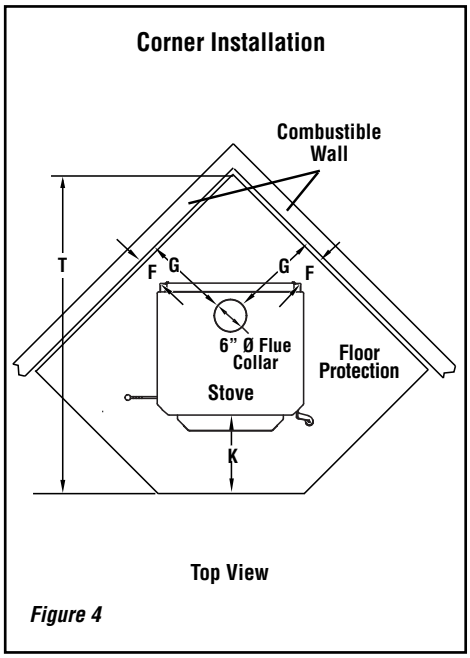

Figure 4

USA - inches (millimeters)

PIPE	INSTALLATION	A (3)	B (1)	C (3)	D (1)	E (8)	F (1)	G (3)	H (2)	I (6)	J (2)	K (7)	L (5)	M	T (6)
Single Wall	Residential	14-1/4 (362)	11-1/2 (292)	23 (584)	13-3/8 (340)	8 (200)	9 (229)	18 (457)	37-5/8 (956)	49 (1245)	34-7/8 (886)	16 (406)	0 (0)	84 (2134)	61-1/2 (1562)
Double Wall	Residential or Mobile Home	12 (305)	9-1/8 (232)	19-1/2 (495)	9-5/8 (245)	8 (200)	6 (152)	15 (381)	37-5/8 (956)	46-3/4 (1188)	34-7/8 (886)	16 (406)	0 (0)	84 (2134)	57-1/2 (1461)

CANADA - inches (millimeters)

PIPE	INSTALLATION	A (3)	B (1)	C (3)	D (1)	E (8)	F (1)	G (3)	H (2)	I (6)	J (2)	K (7)	L (5)	M	T (6)
Single Wall	Residential	14-1/4 (362)	11-1/2 (292)	23 (584)	13-3/8 (340)	8 (200)	9 (229)	18 (457)	47-5/8 (1210)	51 (1295)	40-7/8 (1038)	18 (450)	8 (200)	84 (2134)	63-1/2 (1613)
Double Wall	Residential or Mobile Home	12 (305)	9-1/8 (232)	19-1/2 (495)	9-5/8 (245)	8 (200)	6 (152)	15 (381)	47-5/8 (1210)	48-3/4 (1238)	40-7/8 (1038)	18 (450)	8 (200)	84 (2134)	59-1/2 (1511)

Footnotes:

1- These dimensions to the stove body are for reference only. Actual distances should be measured from the stove's flue collar.

2- Minimum noncombustible hearth pad dimensions.

3- Clearances to connector pipe shall be measured from the flue collar of the stove.

5- In corner applications, when installed at minimum back wall clearances, the required floor protection is dimensioned off the back plane of the stove, therefore the floor protection required off the back corners (at a 45 degree angle) only needs to extend to the wall. This situation will only occur in CANADA installations.

6- Reference dimension only, to assist in planning the installation.

7- Measured from front of floor protection to the front of firebox.

8- USA=8" (200mm) from door opening, Canada=8" (200mm) from sides and back of unit.

NOTE: DIAGRAMS & ILLUSTRATIONS ARE NOT TO SCALE.

SPECIFICATIONS - Tahoma™ 1600GL

Product Reference Information			
Cat. No.	Description	Ship. Weight	Ship. Volume
	Tahoma™ 1600GL Wood-Burning Stove	280 lb.	23 cu. ft.

NOTES:

- *Dimensions shown are approximations only (+/- 1/4")*
- *Diagrams, illustrations and photographs are not to scale – consult installation instructions. Product designs, materials, dimensions, specifications, colors and prices are subject to change or discontinuance without notice.*
- *Approved for residential and manufactured home installations.*
- *Optional Kits Available:*

  Blower
  Outside Air Kit

❶ *Square-foot heating capacities and burn times are approximations only. Actual performance may vary depending upon home design and insulation, ceiling heights, climate, condition and type of wood used, appliance location, burn rate, accessories chosen, chimney installation and how the appliance is operated.*

Specifications

Stove Pipe Diameter Single Wall or Double Wall	**6" (152 mm)**
Log Length	**16" Max. (406 mm Max.)**
Firebox	**Volume = 2.1 cu. ft.**
Cord Wood: ❶	**55,600 BTUs/hr.**
Maximum Burn Times ❶	**7-9 hours**
Heating Capacity ❶	**1,200 to 2,000 sq. ft.**
EPA Grams Per Hour	**2.1 gr/hr**

EPA Phase II and Washington State Approved

Listing

The Tahoma™ 1600GL woodstove is safety
listed with the following agency:

- *PFS Corporation, Tested to UL 1482, ULC S627*

Report # 14-193

Dimensions

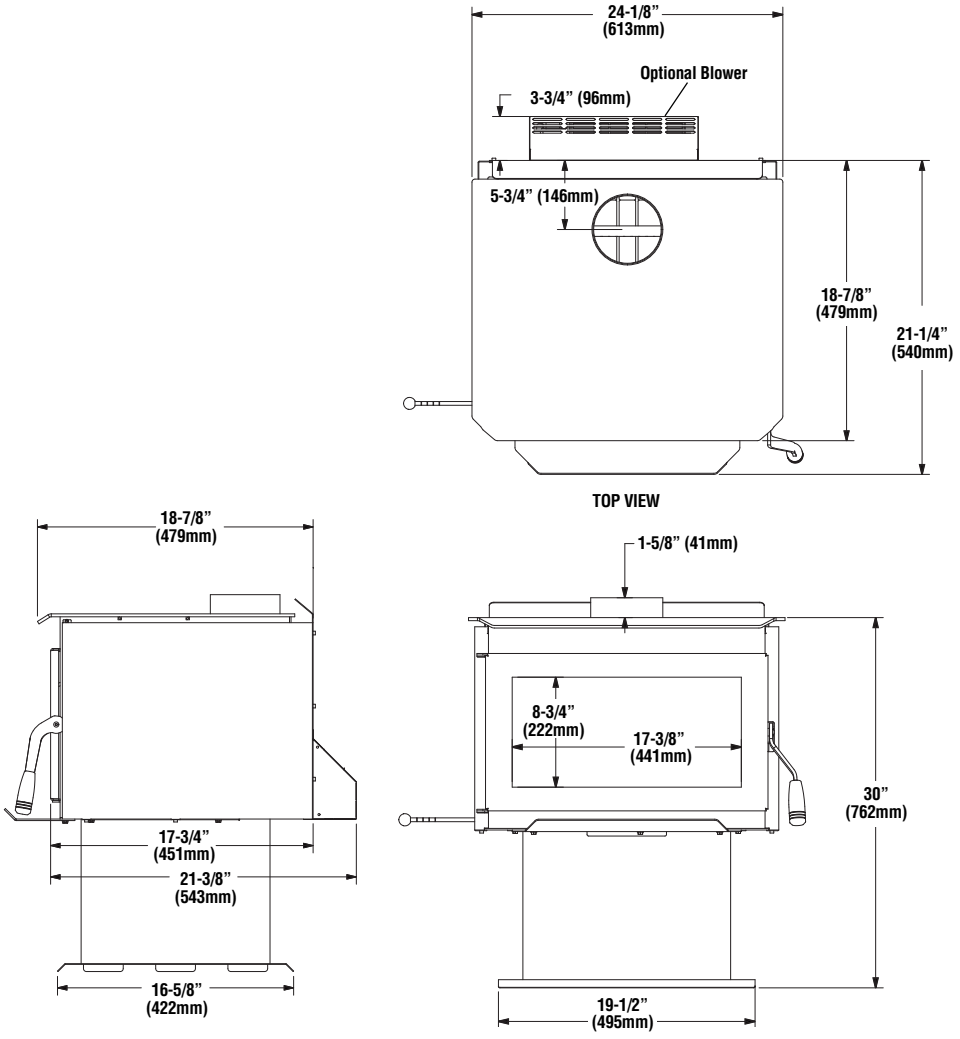

Figure 5

NOTE: DIAGRAMS & ILLUSTRATIONS ARE NOT TO SCALE.

TYPICAL INSTALLATIONS

YOUR CHIMNEY INSTALLATION MUST COMPLY WITH LOCAL BUILDING AND FIRE CODES.

Single Wall Pipe
Using 6” Diameter Single Wall Connector Pipe

INSTALL VENTING SYSTEM PER VENT MANUFACTURERS INSTRUCTIONS!

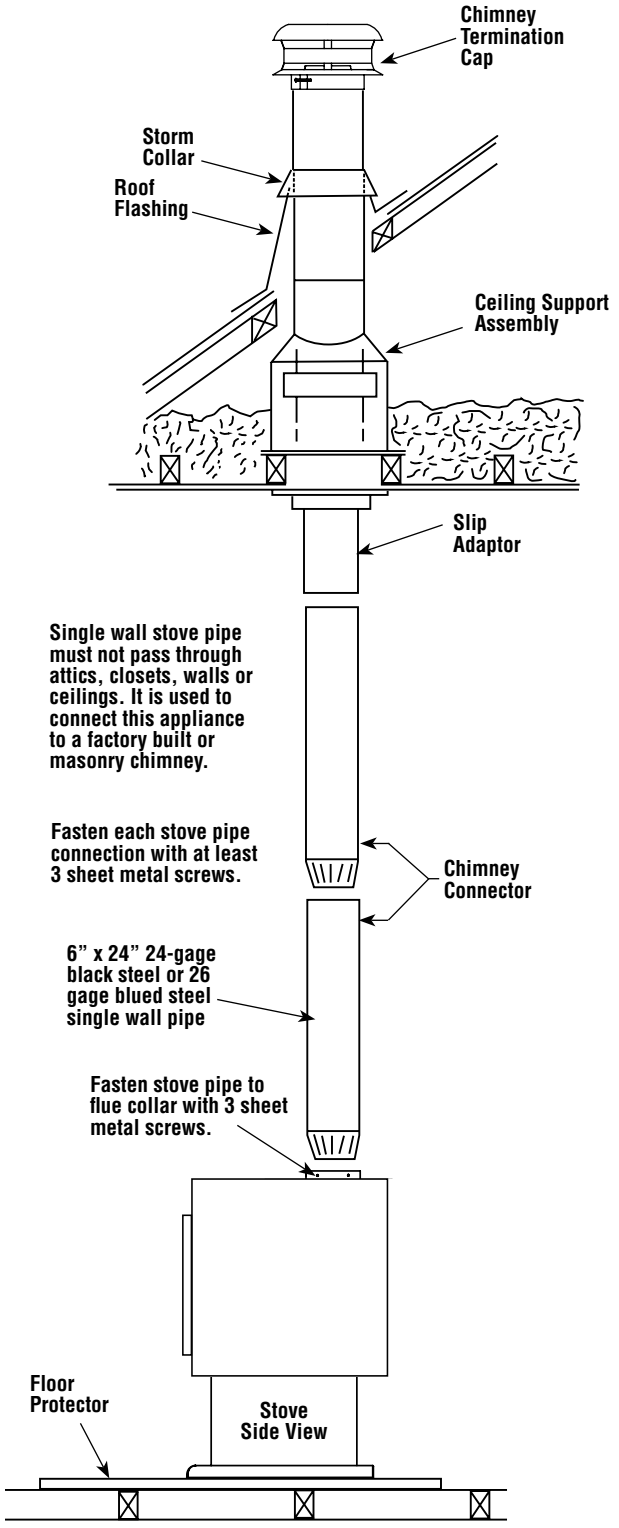

Figure 6 - Typical Installation

NOTE: DIAGRAMS & ILLUSTRATIONS ARE NOT TO SCALE.

CHIMNEY INSTALLATION

- Install chimney as per manufacturer's instructions. Some brands of pipe may require removal of the spacer ring in the flue collar.
- All horizontal runs of pipe should be as short as possible and are required by NFPA No. 211 to have an upward pitch or rise in the same direction the smoke travels of no less than 1/4" to the linear foot. The connector pipe must meet minimum clearances in any direction to walls or other combustible materials. It must attach to a listed double wall metal chimney at least 6" in diameter or to a masonry chimney with a flue passage of at least 48 square inches.
- It is required that a chimney connector pipe not extend further than the inner wall of the flue when it is connected to a masonry chimney and that it either be cemented to the masonry or be installed without cement in a thimble connected to the masonry wall. When the connector is inserted into a thimble, the joint must be tight enough so that it will not be dislodged in normal use.
- Chimney connector pipes should never pass through a floor, ceiling, fire wall, partition, or combustible construction of any type unless certain precautions are taken. The best method is to use a listed thimble and a listed chimney in accordance with the manufacturer's directions. NFPA No. 211 gives approved methods for passing a flue pipe through combustible constructions *(see **Page 11**)*.

Manufactured Home Installations *(ref. **Figure 8**)*

This appliance is approved for installation into a manufactured (mobile) home.

Installation should be in accordance with the Mobile Home Construction and Safety Standard, Title 24 CFR, Part 3280 (in Canada CAN/CSA Z240 MH), or, when such a standard is not applicable, the Standard for Mobile Home Installations, ANSI A225.1.

All mobile home installations require an outside air kit (see ***Page 24*** for ordering information). The stove must be secured to the floor and grounded to the chassis of the mobile home.

WARNING: DO NOT INSTALL IN SLEEPING ROOM OF A MOBILE HOME.

CAUTION: THE STRUCTURAL INTEGRITY OF THE MOBILE HOME FLOOR, WALL AND CEILING/ROOF MUST BE MAINTAINED.

Approved Chimney - Your stove is approved for use with Class A, UL 103 HT (U.S.) / ULC-S629 (Canada) Listed Residential Type and Building Heating Appliance Chimney (HT chimney - 2100° Fahrenheit) and double wall connector pipe**.** Approved chimney brands are Security Chimneys™, Jakes Evans/GSW, Dura-vent, Metal Fab, Ameri-Tec, Metalbestos and Industrial Chimney (ICC).

Clearances to connector shall be measured from 6" flue collar. Restrictions apply! Read instructions before installing.

YOUR CHIMNEY INSTALLATION MUST COMPLY WITH LOCAL BUILDING AND FIRE CODES.

Double Wall Pipe
Using 6" Diameter Type L-Vent Connector Pipe
Manufactured (Mobile) Home Installation Shown

INSTALL VENTING SYSTEM PER VENT MANUFACTURERS INSTRUCTIONS!

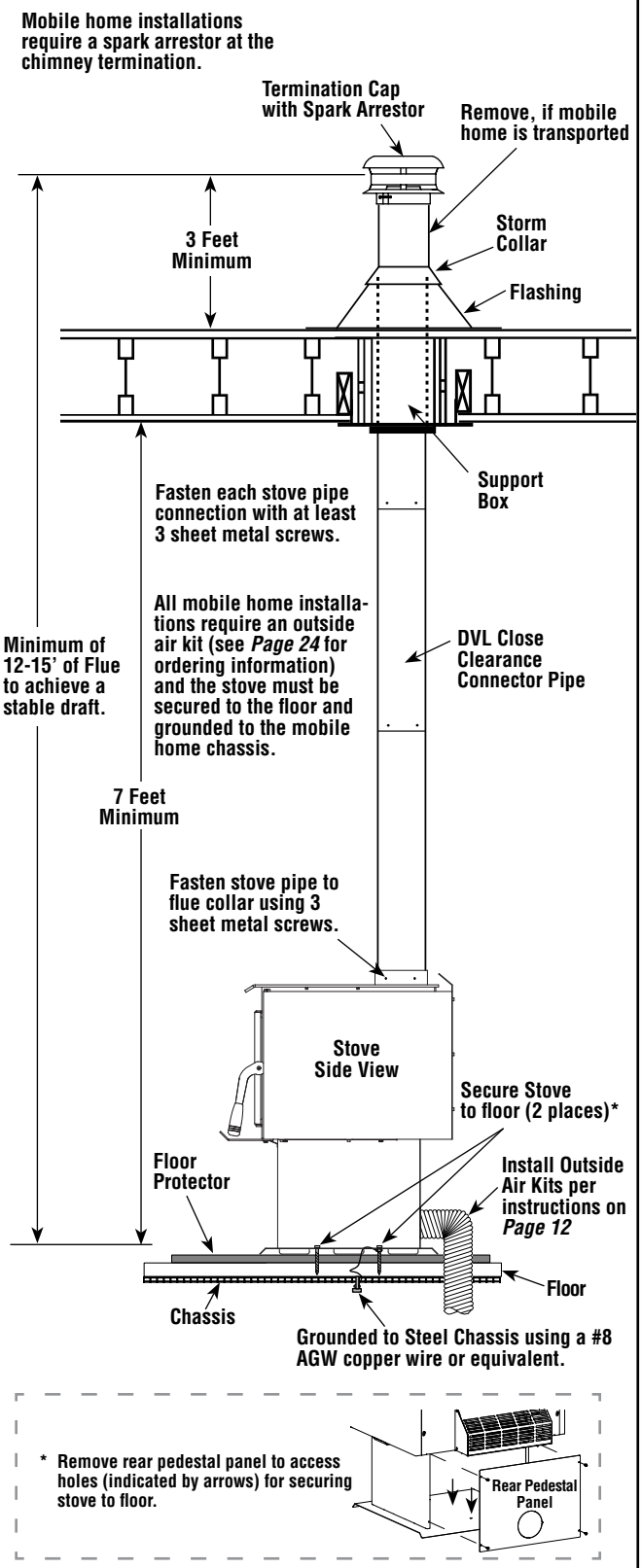

Figure 8 - Typical Installation

NOTE: DIAGRAMS & ILLUSTRATIONS ARE NOT TO SCALE.

Chimney Connector Systems and Clearances from Combustible Walls for Residential Heating Appliances (NFPA 211) - Refer to *Figure 9*

System A. Minimum 3.5 in. (90 mm) thick brick masonry wall framed into combustible wall with a minimum of 12 in. (305 mm) brick separation from clay liner to combustibles. Fireclay liner (ASTM C 315, Standard Specification for Clay Flue Linings, or equivalent), minimum 5/8 in. (16 mm) wall thickness, shall run from outer surface of brick wall to, but not beyond, the inner surface of chimney flue liner and shall be firmly cemented in place.

Clearance: 12 in. (305 mm)

System B. Solid-insulated, listed factory-built chimney length of the same inside diameter as the chimney connector and having 1 in. (25.4 mm) or more of insulation with a minimum 9 in. (229 mm) air space between the outer wall of the chimney length and combustibles.

The inner end of the chimney length shall be flush with the inside of the masonry chimney flue and shall be sealed to the flue and to the brick masonry penetration with non-water-soluble refractory cement. Supports shall be securely fastened to wall surfaces on all sides.

Fasteners between supports and the chimney length shall not penetrate the chimney liner.

Clearance: 9 in. (229 mm)

System C. Sheet steel chimney connector, minimum 24 gage [0.024 in. (0.61 mm)] in thickness, with a ventilated thimble, minimum 24 gage [0.024 in. (0.61 mm)] in thickness, having two 1 in. (25.4 mm) air channels, separated from combustibles by a minimum of 6 in. (152 mm) of glass fiber insulation. Opening shall be covered, and thimble supported with a sheet steel support, minimum 24 gage [0.024 in. (0.61 mm)] in thickness.

Supports shall be securely fastened to wall surfaces on all sides and shall be sized to fit and hold chimney section. Fasteners used to secure chimney section shall not penetrate chimney flue liner.

Clearance: 6 in. (152 mm)

System D. Solid-insulated, listed factory-built chimney length with an inside diameter 2 in. (51 mm) larger than the chimney connector and having 1 in. (25.4 mm) or more of insulation, serving as a pass-through for a single wall sheet steel chimney connector of minimum 24 gage [0.024 in. (0.61 mm)] thickness, with a minimum 2 in. (51 mm) air space between the outer wall of chimney section and combustibles. Minimum length of chimney section shall be 12 in. (305 mm). Chimney section concentric with and spaced 1 in. (25.4 mm) away from connector by means of sheet steel support plates on both ends of chimney section. Opening shall be covered, and chimney section supported on both sides with sheet steel supports of minimum 24 gage [0.024 in. (0.61 mm)] thickness.

Supports shall be securely fastened to wall surfaces on all sides and shall be sized to fit and hold chimney section. Fasteners used to secure chimney section shall not penetrate chimney flue liner.

Clearance: 2 in. (51 mm)

Additional requirements:

1. **Insulation material used as part of wall pass-through system shall be of noncombustible material and shall have a thermal conductivity of 1.0 Btu-in./hr-ft² - ºF (4.88 kg-cal/hr-m² - ºC) or less.**
2. **All clearances and thicknesses are minimums; larger clearances and thicknesses shall be permitted.**
3. **Any material used to close up an opening for the connector shall be of noncombustible material.**
4. **A connector to a masonry chimney, except for System B, shall extend in one continuous piece through the wall pass-through system and the chimney wall to the inner face of the flue liner, but not beyond.**

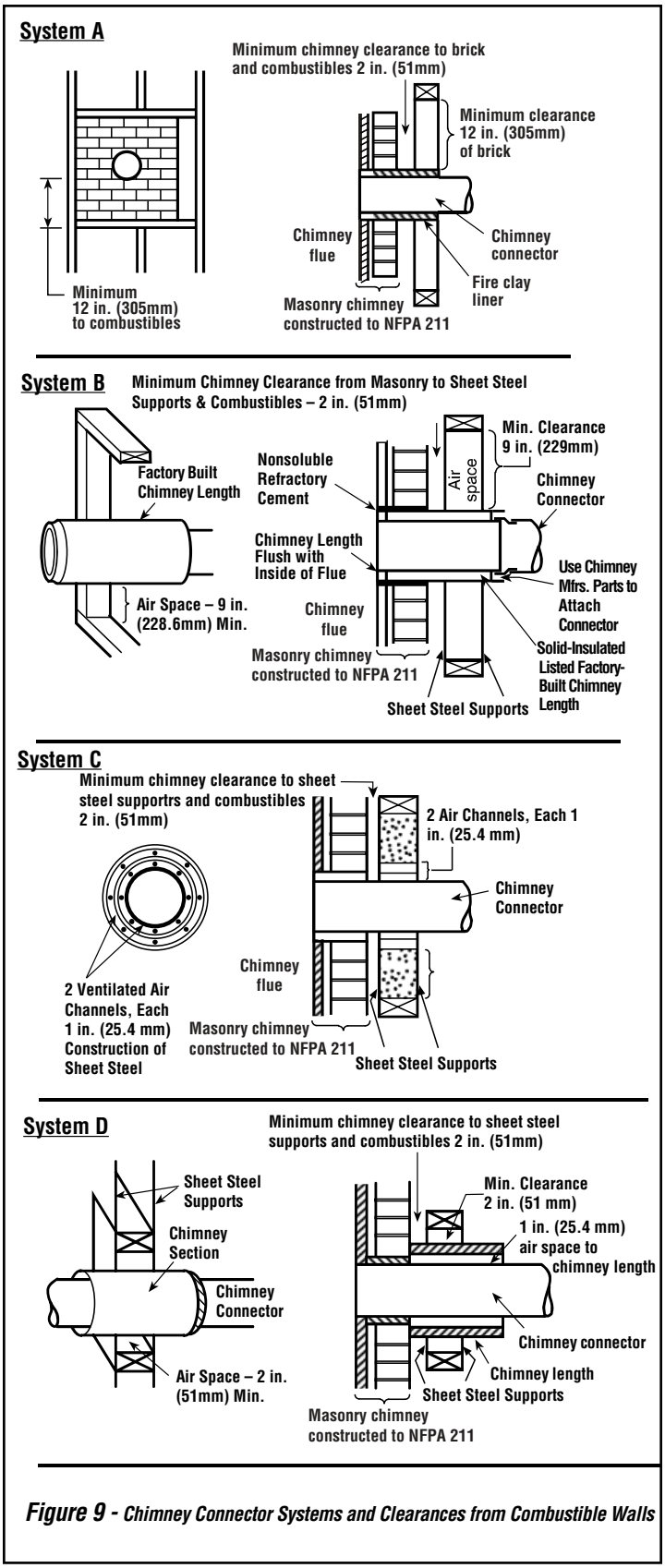

***Figure 9** - Chimney Connector Systems and Clearances from Combustible Walls*

NOTE: DIAGRAMS & ILLUSTRATIONS ARE NOT TO SCALE.

OUTSIDE COMBUSTION AIR KIT INSTALLATION

Outside Air Kits

Order:

1 ea. P/N UZIAD Outside Air Coupler Kit (connects outside air ducting, UZI, to stove)
AND
1 ea. P/N UZI Outside Air Ducting Kit (includes 4" insulated flex x 10' long)
AND
1 ea. P/N H8874 Outside Air Panel and Air Channel Kit (includes rear pedestal panel and side and front air channels)

An outside air kit is required in Manufactured (mobile) Home installations. For residential installations, check with local authorities having jurisdiction in your area, it may be mandatory.

INSTALLATION INSTRUCTIONS

1. **(Manufactured Home Installations Only)** Secure stove to floor per instructions in ***Figure 8*** on ***Page 10***.
2. **Install rear pedestal panel as shown in *Figure 11***.
3. **Install Outside Air Coupler** - Line up the "V" notch in the coupler with the "V" notch in the opening on the back of the pedestal *(see **Figure 11**)*. Push and twist so the rolled edge catches and continue turning a full 360° to lock the coupler in place.
4. **Install Ducting and Air Register *(refer to Figures 11 through 13)*** - The outside air assembly may be installed according to the following requirements:
   a) Duct length should be kept to a minimum.
   b) The air intake register must not be installed more than ten (10) feet (3050 mm) above the base of the stove.
   c) The fresh air must come from outside the house. The air intake must not draw air from the attic, from the basement or garage.
   d) The air intake should be installed where it is not likely to be blocked by snow or exposed to extreme wind and away from automobile exhaust fumes, gas meters and other vents.
   e) The duct and register may be installed above or below floor level.

   - Make a 4-1/4" (110 mm) hole in the outside wall of the house at the chosen location. From outside, place the outside air register in the hole (open side down) and fasten the register to the wall, with screws as shown *(see **Figures 12B and 13**)*.
   - Install the coupler onto the existing collar on stove *(see **Figure 11**)*.
   - Attach the duct to the coupler on stove *(see **Figures 12A and 12B**)*. Using the aluminium tape provided, wrap the tape around the joint between the flexible duct and the air inlet.
5. **Install Front and Side Air Channels** - Install the front and side air channels per the instructions in ***Figure 14*** on ***Page 13***.

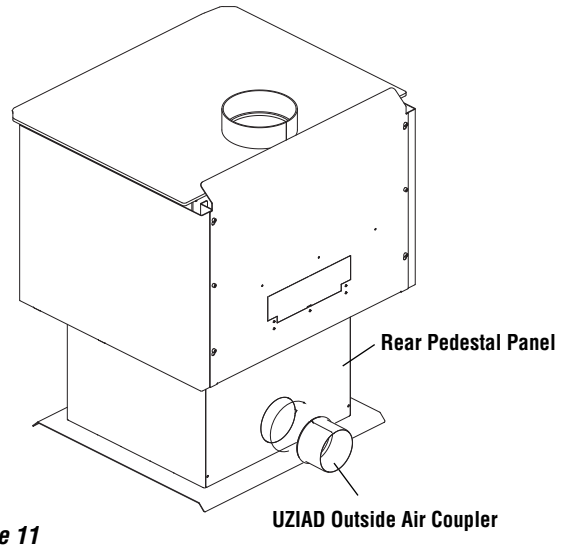

Figure 11

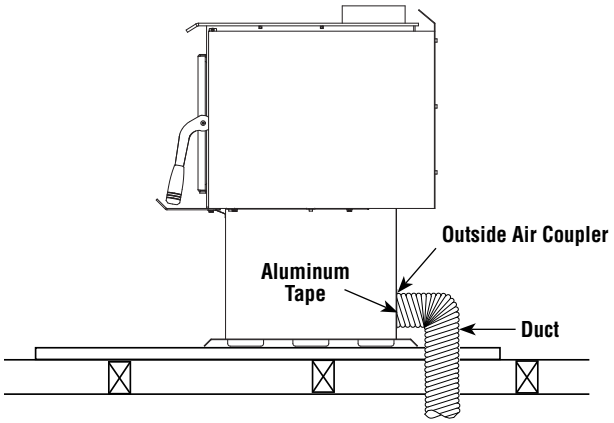

Figure 12A - Outside Air Connection, Through the Floor

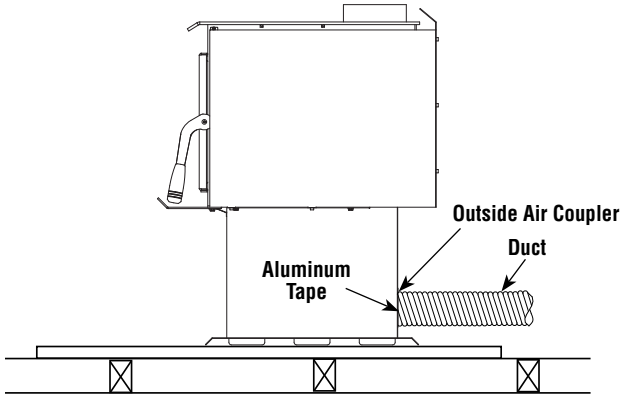

Figure 12B - Outside Air Connection, Through the Wall

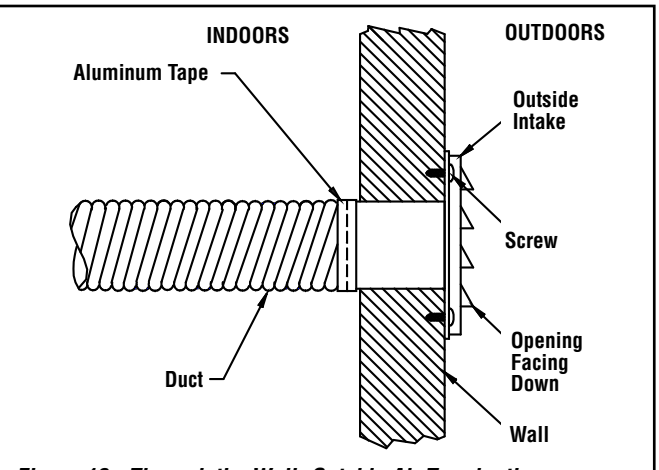

Figure 13 - Through the Wall, Outside Air Termination

See *Figure 8 on Page 10* for additional Manufactured Home requirements.

NOTE: DIAGRAMS & ILLUSTRATIONS ARE NOT TO SCALE.

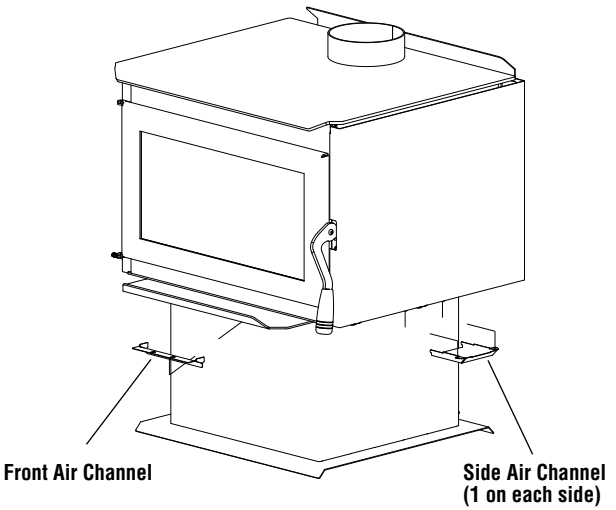

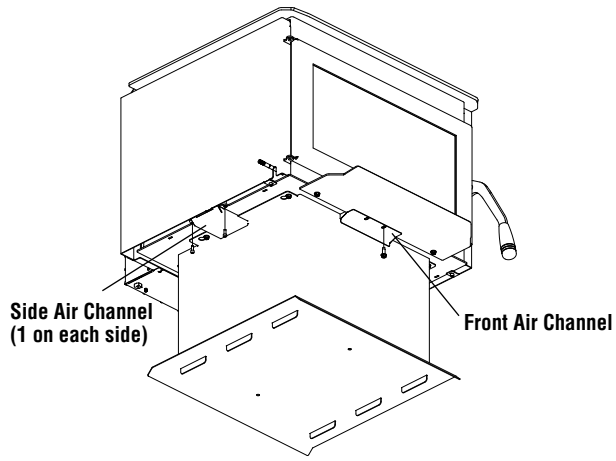

Using the existing screws on the stove, install the front and side air channels as shown here.

Figure 14 - Install Front and Side Air Channels

BRICK INSTALLATION

CAUTION: Wear gloves during brick installation in case of sharp edges inside the stove.

NOTE: *Installation of the baffle boards and baffle blanket is easier when you can still access the flue outlet, (before connecting the flue vent).* ***Be sure the baffle blanket is placed flat on the baffle boards so as not to block exhaust flow to the flue.*** *Use a ruler or a piece of kindling to reach over the baffle blanket to be sure it is completely flat on top of the baffle boards.*

Measure bricks before installing, as per list of dimensions on next page, to be sure the correct bricks are installed in the correct location.

1. Install bricks #1-18 in the numbered sequence shown in ***Figure 15 (Page 14).***
2. Next, you will install the rear baffle boards which are the smaller two of the four baffle boards. The boards will be installed with the 3-9/16" dimension from the front to the rear of the firebox. These boards will be placed on the top side of the rear baffle just to the rear of the middle secondary tube, you will push the baffle boards towards the rear of the firebox until they fall in place at the rear side of the middle secondary tube. You will place one board to the far left side of the firebox and one board to far right side of the firebox. Confirm that both boards are laying flat on the rear baffle and that they are not overlapping each other.
3. Next, you will install the baffle blanket. It will be installed with the 11" dimension from the front to rear of the firebox. Install by lifting it into place between the front and rear baffle. Place the blanket over the rear baffle and rear baffle boards that you have just installed. Next you will place the baffle blanket that is protruding beyond the front side rear baffle on the top side of the front baffle.
4. The final step of the baffle board & baffle blanket installation will be installing the front baffle boards. The front baffle boards will be the two remaining baffle boards which are the larger two baffle boards of the four baffle board kit. They will be installed with the 7-3/8" dimension from the front to rear of the firebox. Start by setting the back side of the board on the rear baffle making sure that it is placed far enough back to lift up and onto the front baffle. Next you will place the front edge of the front baffle boards on the top side of the front baffle and slide them towards the firebox front until it stops against the front baffle edge. You will do this with each front baffle board with one to the right side of the firebox and one to the left side of the firebox. Confirm that the baffle blanket is directly on top of the baffle boards and that it does not protrude beyond the front baffle or front baffle boards as shown in ***Figure 16A*** (also see note above).

Brick Sizes

A = 4-1/4" x 9"
B = 2-1/4" x 8-7/8"
D = 2-1/4" x 9"
E = 1-1/2" x 8-7/8"
F = Full Brick (4-1/2" x 9")
G = 1-1/2" x 9"

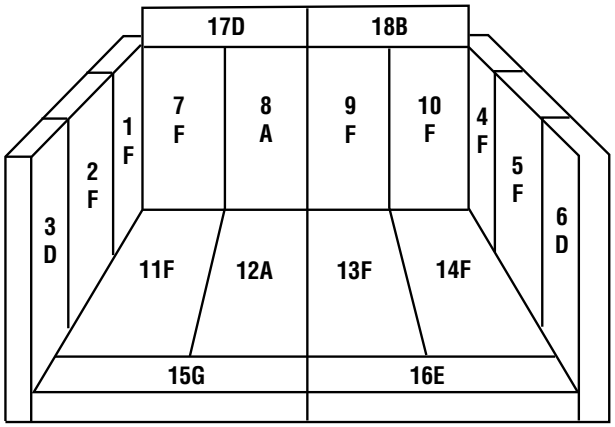

Figure 15

Side Cut-A-Way View of Firebox

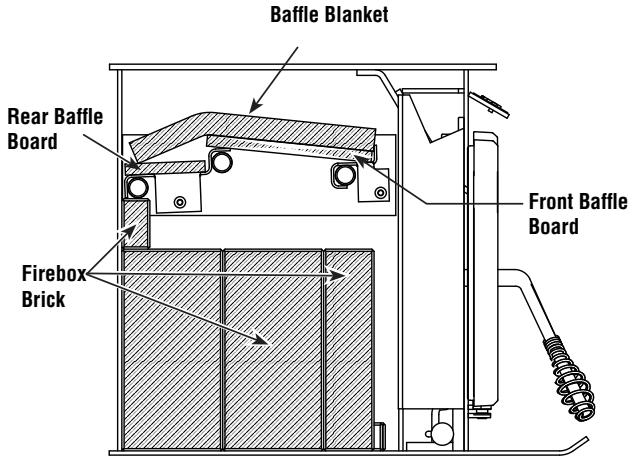

Figure 16A

Baffle Insulation Parts

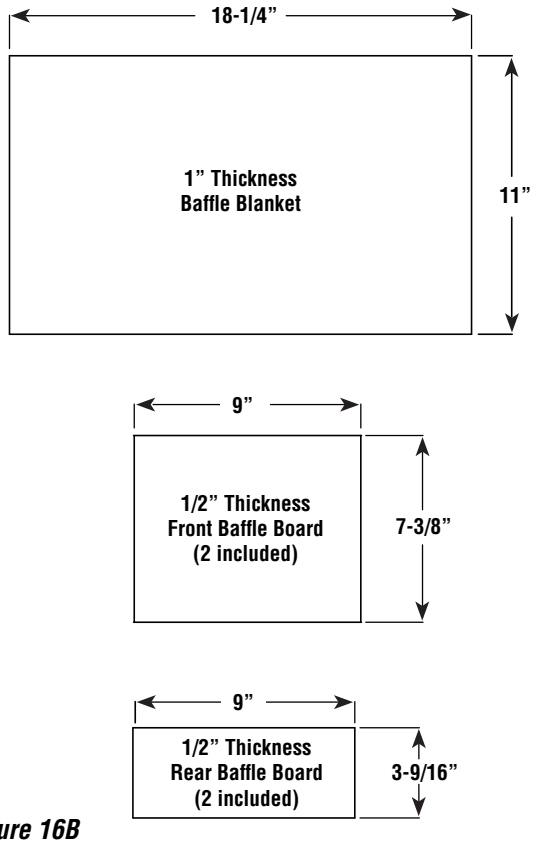

Figure 16B

NOTE: DIAGRAMS & ILLUSTRATIONS ARE NOT TO SCALE.

FOR MOBILE HOME INSTALLS:

- ☐ **Be sure the stove is properly grounded**
- ☐ **Be sure the stove is properly securely fastened to the floor**
- ☐ **Be sure the outside air vent is free of obstructions and has a mesh screen in place**



POST INSTALLATION CHECKS

- ☐ **Check that all chimney pipe joints are secured and installed according to the manufacturers instruction.**
- ☐ **If used, make sure the outside air kit is properly installed and unobstructed.**
- ☐ **Double check all stove clearances.**
- ☐ **Be sure bricks and baffle boards are properly installed.**

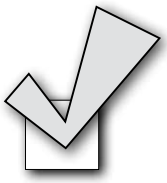

FOR YOUR OWN PROTECTION AND INSURANCE PURPOSES, HAVE YOUR CHIMNEY AND CONNECTOR PIPE INSTALLATION INSPECTED BY YOUR LOCAL BUILDING CODE AUTHORITY OR FIRE MARSHAL BEFORE STARTING A FIRE IN YOUR STOVE. NOTIFY YOUR INSURANCE COMPANY.

PAINT CURING

Do not close the door tightly during the "Burn-In Period." Also, open the door frequently (every 5-10 minutes) to keep the gasket from adhering to the curing paint. Ventilate the house well during these first firings as the paint gives off carbon dioxide and unpleasant odors. It is recommended that persons sensitive to an imbalance in the indoor air quality avoid the appliance during the curing process.

Your new appliance is painted with a high temperature paint that cures during the first few firings. We recommend that you put your stove or fireplace insert through a regimen of three burns. The first two should last for 20 minutes each at 250 degrees (the appliance should be allowed to cool completely between each burn). The third should be a burn of at least 450 degrees F. for 45-60 minutes. The paint will become soft, gummy and emit non-toxic smoke during these burns. After the appliance cools down for the third time, the paint will harden. **DO NOT BUILD A LARGE ROARING FIRE UNTIL THIS CURING EFFECT IS COMPLETE OR YOU MAY DAMAGE THE FINISH OF YOUR STOVE.** Spray can touch-ups should be done only with a high temperature stove paint (cat. no. H8159), available from all IHP dealers.

OPERATING HINTS

1. Burn only dry, well-seasoned cord wood. In some states it is illegal to burn wet wood or anything other than clean, dry wood products.
2. Your stove or fireplace insert is designed to operate with the door closed! Operate only with the door shut tightly at all times except when loading wood and possibly on start up to establish a draft. Never leave the unit unattended while the front door is opened.
3. **DO NOT** contact or move the baffle boards while loading wood. Occasionally check the baffle to assure that the boards are in there correct location.
4. **CAUTION: THE DRAFT CONTROL MUST BE FULLY OPEN BEFORE OPENING THE DOOR TO AVOID POSSIBLE COMBUSTION FLASH!!** (Ignition of hot volatile gases as the door is opened).
5. Feeding excessive amounts of fuel to the appliance should be avoided. It is important to supply it with sufficient draft and fuel to maintain a moderately hot fire. If, during overnight burns, heavy creosote deposits develop inside your stove and on the door, the draft is set too low - review your burning habits!

DOOR OPERATION

Do not operate the appliance with the door open or ajar other than possibly during start up to create a draft (Do not leave the unit unattended while the front door is slightly open during start up). Operating the appliance with the door open other than in initial start up if needed will produce extreme temperatures within the appliance. Damage caused from over-firing is not covered under the manufacturers limited warranty.

⚠ WARNING

Be careful not to abuse door assembly by striking or slamming it. If the door assembly or glass is broken or damaged, they must be replaced with factory original parts before heater can be safely operated. Use only components provided by the manufacturer as replacement parts.

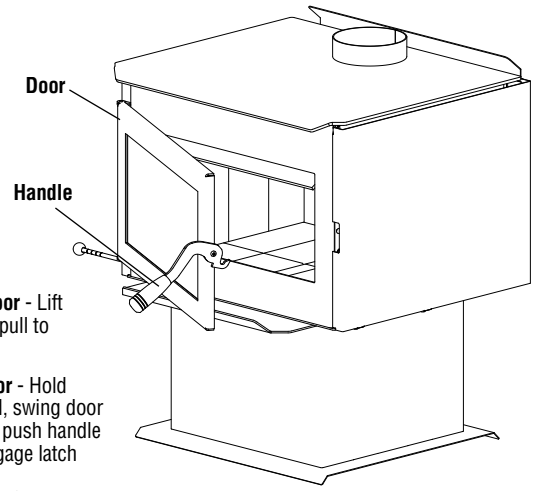

Opening Door - Lift handle and pull to open door

Closing Door - Hold handle lifted, swing door closed then push handle down to engage latch

Figure 18

NOTE: DIAGRAMS & ILLUSTRATIONS ARE NOT TO SCALE.

STARTING AND MAINTAINING A FIRE

1. **NEVER USE FLAMMABLE LIQUIDS TO START OR REKINDLE A SOLID FUEL FIRE!!**
2. Fully open the primary draft control by placing draft control (wood handle located on left side of the stove) in the highest position. This control determines the amount of air entering the stove. Lowering this control reduces the burn rate of the stove.
3. Place a small amount of crumpled paper in the front of the firebox and cover it with a few pieces of kindling.
4. Light the paper and allow sufficient time for the kindling to become fully engulfed in flames. You will now close the wood units front door. Your wood units front door may or may not need to be left slightly open during this start up process, this depends on the stove model and the amount of draft present.
5. **When operating any wood burning appliance, it is important to become familiar with how the damper control affects heat output and the overall temperature of the appliance. A stove thermometer can be a helpful tool to help ensure you are not over-firing your appliance and it will also ensure you are burning fuel at a rate that is most efficient. Place a stove thermometer on the top of the appliance as shown in *Figure 19*. Monitor the temperature every 15 minutes or so until you become more familiar with your appliance. Close the damper all the way down if you begin to reach 600 degrees, as this is a sign that you are operating your appliance at too high a temperature.**

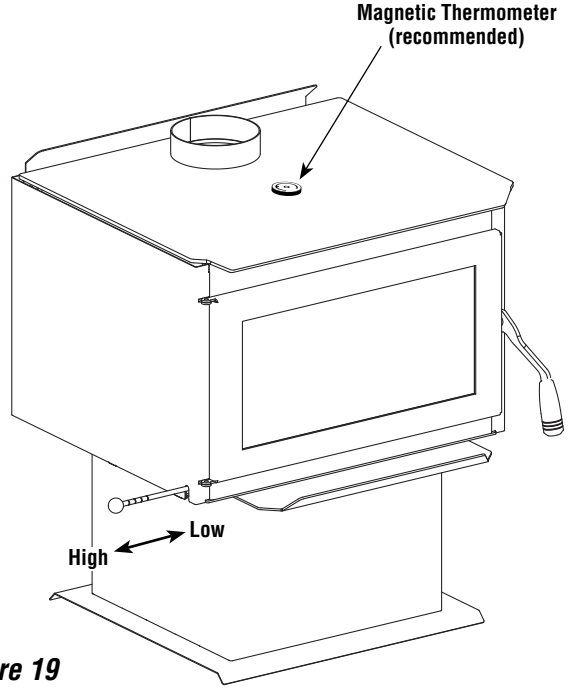

Figure 19

DO NOT LEAVE THE STOVE UNATTENDED WHILE THE FRONT DOOR IS SLIGHTLY OPEN.

CAUTION: Do Not alter the adjustment range of the draft control for increased firing for any reason.

Operate only with fuel door closed. Maintain all seals in good condition. Do not operate with broken glass.

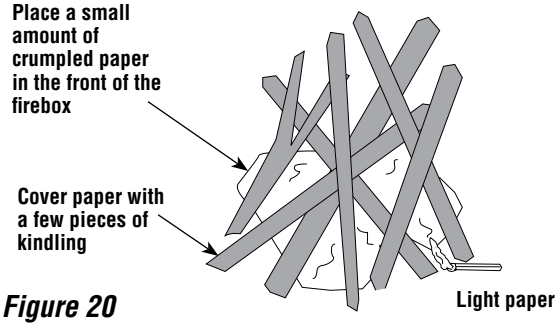

Figure 20

SEE MAINTENANCE SECTION FOR GLASS CLEANING GUIDELINES AND TIPS FOR KEEPING THE GLASS CLEAN *(Page 22)*.

6. Once kindling is burning well, larger pieces of wood may be added, then the door should be fully closed if there was the need to keep it slightly open during start up.
7. For best results, use smaller pieces of wood to get the appliance temperature very high before loading larger wood for sustained burns. If necessary, crack the door to allow ignition of the fuel charge. Now you can add larger pieces of wood and after several minutes of high burn, set the left control for the desired heat output. Check the exhaust in about 15 to 20 minutes *(see **Figure 22**)*. Large amounts of smoke indicate an improper burn setting (either too high or too low). Adjust and recheck in 5 to 10 minutes.

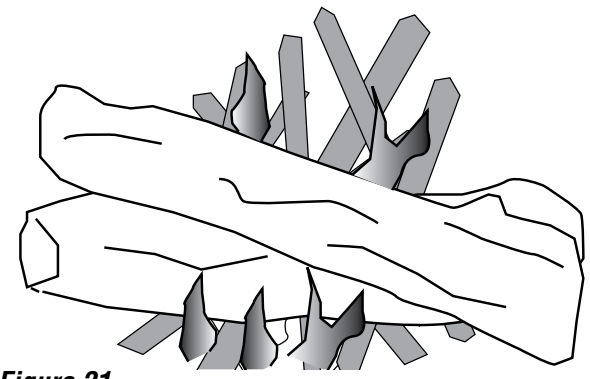

Figure 21

NOTE: DIAGRAMS & ILLUSTRATIONS ARE NOT TO SCALE.

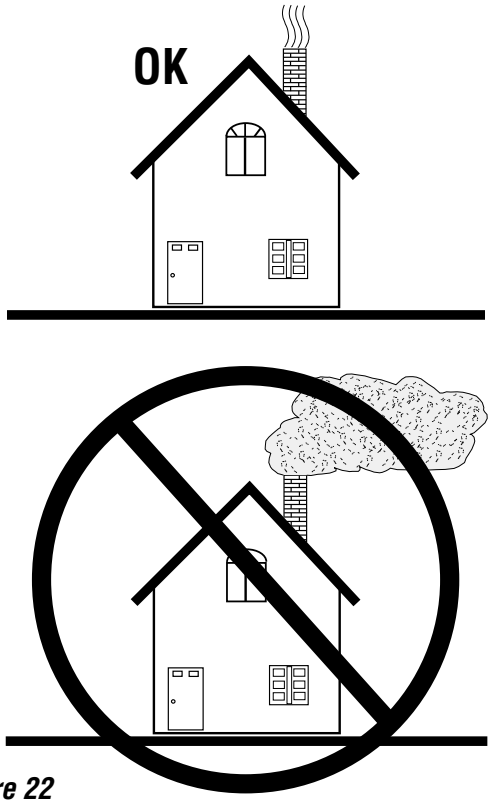

Figure 22

FUEL

This appliance is designed to burn dry seasoned natural wood only (see *Page 20* for a list of prohibited fuels). Failure to burn proper fuels only will void the certification and the warranty of the appliance.

Dry, seasoned wood is that which has been cut, split and allowed to dry under a covered area where air is free to flow and circulate under and around the wood (not under a tarp or plastic). Make sure wood is not stacked directly on the ground, it may absorb moisture from the ground. It should be allowed to dry in these conditions for a minimum of six months, preferably one year or more. **IT MUST BE UNDERSTOOD THAT WOOD CANNOT BE LEFT IN ANY KIND OF WET OR DAMP AREA OR IT WILL NEVER BECOME COMPLETELY SEASONED.**

Do Not store fuel within space heater installation clearances or within the space required for refueling and ash removal.

DO NOT OVERFIRE THIS HEATER

Attempts to achieve heat output rates that exceed heater design specifications can result in permanent damage to the heater.

What does "Well-Seasoned" mean?

When a tree is cut down, the wood is green, full of sap and moisture. This moisture content can exceed 80%, which must be reduced to less than 20%. Wood properly seasoned is then capable of generating the heat the stove was designed to provide.

Green wood does not burn easily. Attempting to burn green wood often results in a lot of smoke and very little fire. Time is the most important factor in seasoning wood. Ideally the moisture content should be reduced to 11-20%. ***NOTE: The use of a firewood moisture meter is recommended to ensure the firewood contains less than 20% moisture.***

Seasoning Guide
Softwoods – 6 months to 18 months
Hardwoods – 12 months to 24 months

Logs that are 5" diameter across or larger should be split in half, three pieces if over 8 inches, and four pieces when over a foot across. If a tree has been dead for 2 – 4 years it still needs to be cut, split, and seasoned for 6 to 24 months depending on the wood.

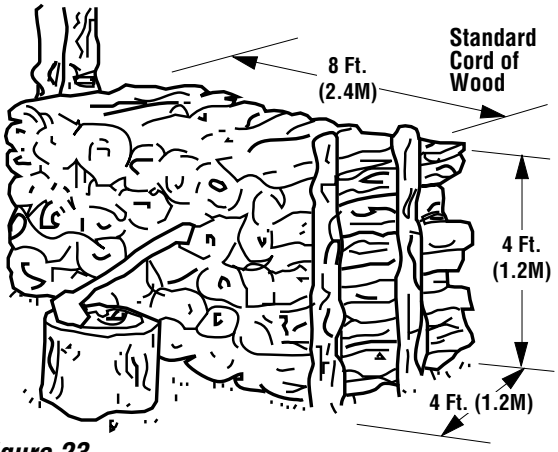

Figure 23

NOTE: DIAGRAMS & ILLUSTRATIONS ARE NOT TO SCALE.

GETTING THE MOST OUT OF YOUR STOVE

Recent developments in wood-burning technology have made wood-burning a cleaner and more convenient way to heat your home. Overall efficiency in a wood-burning appliance is a combination of combustion efficiency and heat transfer efficiency. Whether heating your entire home or just a room or two, your understanding of how to best operate your stove or insert will enhance its overall efficiency and performance. What this can mean to you is longer, cleaner burns, less wood use and more heat.

The following sections will outline techniques you can use to "get the most out of your stove." Please read them carefully.

MAXIMIZING YOUR STOVE'S OVERALL EFFICIENCY

It is important to know that for clean highly efficient burns you will need to have sufficient temperatures inside the firebox for thorough combustion. The best method for determining if you have sufficient temperatures is to watch the brick lining in your firebox. When you first light your stove or fireplace insert, the firebrick will turn a dark brown or black. After 20 to 30 minutes of a hot fire, most of the bricks should return to near their original beige color. This means the firebrick have reached a high enough temperature for your stove to achieve high combustion efficiency and you are ready to adjust the draft control to a lower setting.

Second and just as important, is achieving a high level of heat transfer efficiency. Slowing the rate of flow through the stove or insert enhances heat transfer, thus allowing more time for heat to be transferred into your home. To do this, be sure to thoroughly preheat your stove and then reduce the amount of primary air by closing the draft control down to a lower setting. (More air may produce a slightly greater amount of heat, but will greatly increase wood consumption).

To get the most out of your appliance, you will need to combine good combustion efficiency with good heat transfer practices. The following are some tips on how to operate your stove to achieve the highest overall efficiency.

1. Thoroughly preheat your stove before slowing the burn rate by closing the draft control.
2. When loading wood into a preheated stove or fireplace insert, allow a vigorous fire to build before lowering the draft control.
3. Operate your stove as much as possible in the low to medium burn ranges.
4. Do not lower the draft setting so low as to completely extinguish the flames in the firebox. Check for at least some small flames twenty minutes after setting the draft control.
5. Do not continually operate your stove or fireplace insert in the high (wide open) setting. This wastes wood by carrying a great deal of heat up the chimney and can damage your stove or fireplace insert and chimney.
6. Go outside and check your chimney. More than a very small amount of smoke indicates wasted heat, creosote build up and pollution *(see **Figure 22**)*.

ACHIEVING CLEAN, LONG BURNS

To achieve long burn times, after having thoroughly preheated the stove, load the firebox without blocking the small air opening found in the center front of the firebox. At this point, you may need to burn the stove with the draft open for a few minutes to ignite the wood. All IHP stoves are EPA tested for emissions at low burn with the air control completely closed. Whether or not you should burn your stove with the air control completely closed will depend on the following factors:

- How you load your wood
- Your chimney type, height and draft
- Your wood type and its moisture content
- The temperature of the appliance
- Which model stove or insert you have

In order to maximize the burn time of your stove you may need to experiment to get the right balance of starting temperature, wood type, and draft control setting for your particular venting configuration. Do not reload the stove for long burns when the stainless secondary tubes or baffles are glowing red, or when the stove is uncomfortably hot to load. This indicates the stove is too hot to load for a long burn.

NOTE: DIAGRAMS & ILLUSTRATIONS ARE NOT TO SCALE.

OPTIONAL BLOWER KIT

The optional blower is controlled by a Dial-a-Temp *(see **Figure 24**)*. It contains an On/Off line switch with variable speed control from low to high.

1) Install the optional blower kit per the instructions provided in the blower kit.
2) Plug the blower power cord into the receptacle on the bottom of the Dial-A-Temp.
3) Plug the connected Dial-A-Temp into a properly grounded, 120 VAC wall outlet.
4) To operate, rotate the dial on the Dial-A-Temp clockwise until it clicks on. Rotate the dial further clockwise for a lower speed, then counter-clockwise for a higher speed.

NOTE: Turn blower off before opening the door to load the fuel.

⚠ WARNING

The blower must be plugged directly into a properly grounded three-prong receptacle, 120 VAC, 60 Hz, single phase. Do not cut or remove the grounding prong from this plug. Do not route power cord under or in front of appliance.

Installation must be in accordance with National Electrical Code, ANSI/NFPA 70 - latest edition. In Canada, the current CSA C22.1 Canadian Electrical Code - latest edition.

DANGER: Disconnect power before servicing blower.

OPTIONAL BLOWER KIT

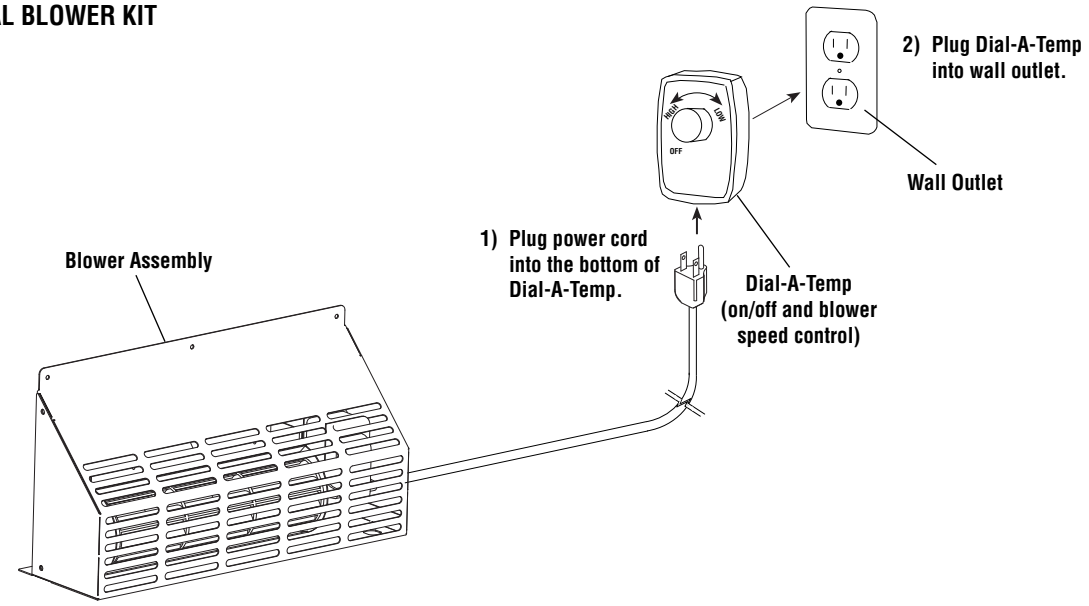

Figure 24

⚠ WARNING

In the event that you remove the blower for any reason, the rear heatshield must be returned to its original condition or replaced before using the heater. Excessive rear wall temperatures will result if the stove is burned with the blower opening unobstructed.

NOTE: DIAGRAMS & ILLUSTRATIONS ARE NOT TO SCALE.

DO'S AND DON'TS

DO NOT: Install or operate the appliance before reading this manual.

DO NOT: Close the draft beyond the point at which the flames are completely extinguished.

DO NOT: Open the appliance door without **fully opening** the draft first.

DO NOT: Burn driftwood or wood that has been in salt water. This includes some mill ends and scrap lumber that has been floated in salt water on the way to the mill. (This will void your warranty).

DO NOT: Force oversized logs into the firebox as this may dislodge the baffle assembly.

DO NOT: Close the door tightly during Burn-In Period.

DO: Consult local building department if other than recommended clearances are desired.

DO: Read instructions for the baffle boards occasionally to ensure you have not bumped or moved them out of place when loading wood.

DO: Check the chimney and baffle monthly to make sure they are clean.

DO: Burn seasoned, dry wood only! (RAIN = WET WOOD)

DO: Open the door frequently during Burn-In Period to keep gasket from adhering to the curing paint.

DO: Enjoy the warm feeling of your new IHP appliance.

Smoke Detector Recommended

Since there are always several potential sources of fire in any home, we recommend installing smoke detectors. If possible, install the smoke detector in a hallway adjacent to the room (to reduce the possibility of occasional false activation from the heat produced by these appliances). If your local code requires a smoke detector be installed within the same room, you must follow the requirements of your local code. Check with your local building department for requirements in your area.

Carbon Monoxide Monitor Recommended

Carbon Monoxide Poisoning: Early signs of carbon monoxide poisoning are similar to the flu with headaches, dizziness and/or nausea. If you have these signs, obtain fresh air immediately. Some people are more affected by carbon monoxide than others, including pregnant women, people with heart or lung disease or anemia, those under the influence of alcohol, and those at high altitudes.

It is against federal regulations to operate wood heaters in a manner inconsistent with operating instructions in the manual.

PROHIBITED FUELS

This heater is designed to burn natural wood only. Higher efficiencies and lower emissions generally result when burning air dried seasoned hardwoods, as compared to softwoods or to green or freshly cut hardwoods. DO NOT BURN:

- **Garbage;**
- **Lawn clippings or yard waste;**
- **Materials containing rubber, including tires;**
- **Materials containing plastic;**
- **Waste petroleum products, paints or paint thinners, or asphalt products;**
- **Materials containing asbestos;**
- **Construction or demolition debris;**
- **Railroad ties or pressure-treated wood;**
- **Manure or animal remains;**
- **Salt water driftwood or other previously salt water saturated materials;**
- **Unseasoned wood;**
- **Christmas tree branches;**
- **Paper products, colored paper, cardboard, plywood, or particleboard;**
- **gasoline;**
- **naphtha;**
- **engine oil;**
- **flammable liquids;**
- **solvents;**
- **grease; or**
- **coal**

The prohibition against burning these materials does not prohibit the use of fire starters made from paper, cardboard, saw dust, wax and similar substances for the purpose of starting a fire in an affected wood heater.

Burning these materials may result in release of toxic fumes or render the heater ineffective and cause smoke. Intense firing with these materials may overheat the fireplace, causing damage to the unit, a fire or even possibly igniting a chimney fire if the chimney is creosoted. Burning unapproved fuel, resulting in excessive pollutants being emitted, may be prohibited and subject to a fine or other penalty by the authority having jurisdiction in your area.

MAINTENANCE

Have your product inspected at least once a year by a qualified service technician to ensure gaskets, air tubes, baffles, and venting are in good repair to ensure proper performance. Have degraded items replaced by a qualified service technician.

THIS WOOD HEATER NEEDS PERIODIC INSPECTION AND REPAIR FOR PROPER OPERATION. IT IS AGAINST FEDERAL REGULATIONS TO OPERATE THIS WOOD HEATER IN A MANNER INCONSISTENT WITH OPERATING INSTRUCTIONS IN THIS MANUAL.

DOOR HINGES: If door hinges need lubricating, use an anti-seize compound (never use oil) available from your IHP dealer.

DOOR LATCH: Adjustment Instructions -

1. Using a 5/32" hex wrench, remove the side heat shield by removing 3 screws on the back, 2 screws on the bottom, and 1 screw at the top-front corner.
2. With the door open, loosen the latch nuts using a 3/8" wrench. Slide the latch assembly forward to loosen the door and backward to tighten the door.
3. Secure the nuts in place and test the door. If more adjustment is required, repeat step 2.
4. Replace the heat shield before burning the stove.

The hinge side of the door can also be adjusted if necessary. Repeat the procedure above on the hinge side of the stove.

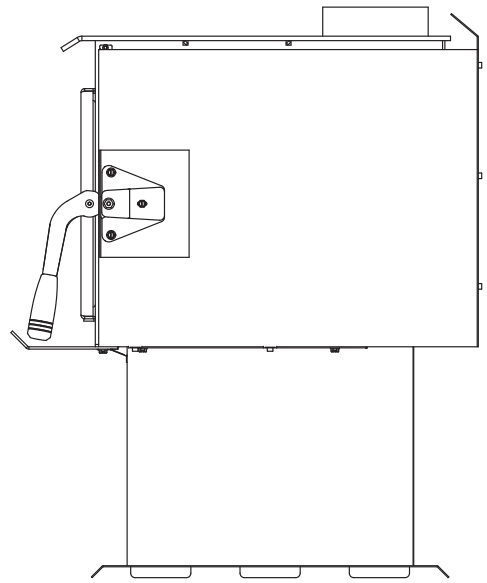

Figure 27

DOOR GASKET: Periodically check gasket to make sure it is not over-compressed. If compressed, replace with a special woven door rope. (Don't try substituting rope, only use IHP door rope).

BAFFLE BOARDS: Your baffle boards should be inspected during every chimney cleaning. If either board is damaged then replace baffle boards.

CREOSOTE FORMATION AND NEED FOR REMOVAL

When wood is burned slowly, it produces tar and other organic vapors, which combine with expelled moisture to form creosote. The creosote vapors condense in the relatively cool chimney flue of a slow-burning fire. As a result, creosote residue accumulates on the flue lining. When ignited, this creosote makes an extremely hot fire.

The chimney and chimney connector should be inspected at least once monthly during the heating season to determine if a creosote buildup has occurred. If creosote has accumulated (1/8" [3 mm] or more), it should be removed to reduce the risk of a chimney fire.

Establish a routine for the fuel, wood burner and firing technique. Check daily for creosote build-up until experience shows how often you need to clean to be safe. Be aware that the hotter the fire the less creosote is deposited, and weekly cleaning may be necessary in mild weather even though monthly cleaning may be enough in the coldest months. Contact your local municipal or provincial fire authority for information on how to handle a chimney fire. Have a clearly understood plan to handle a chimney fire.

DISPOSAL OF ASHES

Whenever ashes get 3 to 4 inches deep in your firebox, and when the fire has burned down and cooled, remove excess ashes. Leave an ash bed approximately 1 inch deep on the firebox bottom to help maintain a hot charcoal bed.

Ashes should be scooped out of a cool stove or fireplace insert with a small metal shovel. Ashes should be placed in a steel container with a tight fitting lid and moved outdoors immediately. Other waste shall not be placed in this container. The closed container of ashes should be placed on a non-combustible floor or on the ground, well away from all combustible materials, pending final disposal. If the ashes are disposed of by burial in soil or otherwise locally dispersed, they should be retained in the closed container until all the cinders have thoroughly cooled. Ashes can ignite up to 72 hours after removal from the appliance.

⚠ WARNING

Inspect and clean chimney and connector frequently. Under certain conditions of use, creosote buildup may occur rapidly.

MAINTENANCE

GLASS REPLACEMENT INSTRUCTIONS

*(Refer to **Figure 26**)*

Step 1. Remove Door Assembly - Remove the upper and lower hinge pins by pressing the bottom of each hinge pin up, then pull out from the top. Lift off door and place face down on a soft surface.

Step 2. Remove Glass Retainer Nuts (10 ea.) - Using an 3/8" nut driver or wrench remove the ten glass retainer nuts. To locate nuts, peel back the door gasket as necessary.

Step 3. Remove Glass - Carefully remove broken glass one piece at a time (protective leather gloves are recommended).

Step 4. Clean Door Frame - Clean the area of the door frame where the new glass with gasket will be installed.

Step 5. Install New Glass Assembly - Install the new glass with gasket (use only factory supplied 5mm ceramic glass with gasket. Do not substitute).

Step 6. Reinstall Retainer and Nuts - Carefully reinstall the glass retainer and nuts. Be very careful not to overtighten the nuts (this could result in glass breakage when the stove is hot).

Step 7. Reinstall Door - Align hinges on door frame with corresponding hinge holes on the face of stove. Reinstall the upper and lower hinge pins from the top.

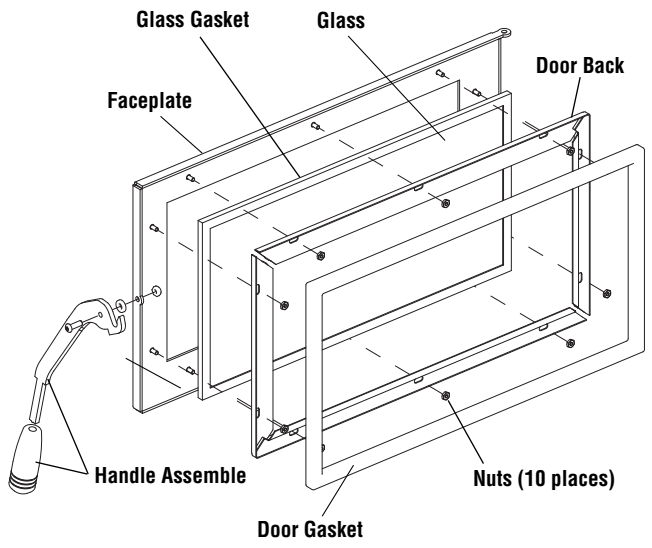

Figure 26 - Glass Replacement

GLASS CLEANING GUIDELINES

WARNING: DO NOT CLEAN GLASS WHEN APPLIANCE IS HOT!

Glass on any wood stove will not stay perfectly clean. Here are some guidelines for cleaning and caring for the glass:

- **Ensure the stove is cold prior to cleaning glass.**
- This appliance is designed to provide a flow of air over the inside of the glass, where along with high heat helps inhibit build-up on the glass. When build-up occurs, a commercial glass cleaner designed for stoves is recommended. Regular household glass cleaners will not clean creosote.
- Do not use abrasives such as steel pads, steel wool or oven cleaner as they will scratch the glass. Never scrape glass with a razor blade as this may pit the glass and make it impossible to clean in the future.
- Do not use chemical glass cleaners as they may damage the gaskets or painted surfaces.

TIPS FOR KEEPING THE GLASS CLEAN

- Burn only dry seasoned cord wood. **Wet wood = Dirty glass.**
- A short, hot fire (15 - 20 minutes) may help to clean off some of the normal buildup. **Lower burns = more build-up. Higher burns = less build-up.**
- Keep freshly loaded wood away from the glass.
- After reloading, allow all the wood to catch flame before dampering down the stove.

⚠ CAUTION

Cleaning Glass: Ensure appliance is cold prior to cleaning glass. A commercial glass cleaner designed for stoves is recommended. Do not use abrasive cleaners. Do not clean with any materials, which may scratch or otherwise damage the glass. Scratches on the glass can develop into cracks or break. Inspect the glass regularly. If you detect a crack, extinguish the fire and contact your dealer for a replacement.

NOTE: DIAGRAMS & ILLUSTRATIONS ARE NOT TO SCALE.

TROUBLESHOOTING

Problem	Solution
POOR DRAFT:	Extend chimney in length or have the chimney realigned to the proper size flue. Oversized chimneys normally have poor drafts. Remember, the appliances' draft depends solely on the natural draft of the chimney (See Draft Requirements on ***Page 4***). If your stove or fireplace insert is not drafting properly, your chimney is the problem. All stoves are thoroughly tested to ensure proper draft with the correct size chimney flue.
EXCESSIVE DRAFT:	With better chimneys being more common, excessive draft can be an issue. Alleviate excessive draft by slowing the burn rate of the appliance once it has reached proper operating temperature (See Maximizing Your Stoves Overall Efficiency on ***Page 18***).
DIRTY GLASS:	1) Burn smaller, hotter fires and check to make sure you are not setting the draft down too far with the draft control. 2) Make sure your wood is well-seasoned and dry (not open to rain - see Creosote and Fuel sections on ***Pages 17 and 22***). 3) See Poor Draft section (above) and Cleaning Glass on ***Pages 4 and 22***.
SMOKES WHEN DOOR IS OPEN:	1) If smoke is entering the room, check to make sure your baffle boards are properly installed. 2) Check the chimney for blockage due to creosote (see Chimney and Creosote sections on ***Page 22***). 3) Check draft (See POOR DRAFT section above).
WOOD BURNS TOO FAST:	1) The draft control must be closed further. 2) Add fuel at lower firebox temperatures. 3) Load wood side to side and reduce the flow of air under wood. 4) The door seal may need replacing, check for leakage. 5) See "Excessive Draft."
POOR HEAT OUTPUT:	1) Check your wood. Wet, moist, unseasoned wood will not produce heat. 2) Your stove or fireplace insert needs to be seasoned (moisture removed from the steel and brick). Continue to burn a fire. It normally takes from one to three weeks of burning to season your stove (See Burn-In Period on ***Page 15***). 3) See Excessive Draft section above.
PAINT GIVES OFF ODOR (smoke):	Paint is tempering-in. Burn only moderately hot for the first few days until paint is fully cured. Then burn a very hot fire to cure any paint that may not easily cure. Open windows or door to ventilate (See Burn-In Period on ***Page 15***).

REPLACEMENT PARTS - MODEL TAHOMA™ 1600GL

Contact an IHP dealer to obtain any of these parts. Never use substitute materials. Use of non-approved parts can result in poor performance and safety hazards.

Cat. No	Description
	Right side heat shield
	Left side heat shield
	Back heat shield
	Door back w/pins
	Door channels w/nuts
	Glass
	Glass gasket kit (8’ 4”)
	Door rope kit, 7/8” dia. (6’ 2”)
	Baffles
	Secondary burn tubes w/clamps
	Draft rod knob
	Ash lip w/hardware
	Pedestal
	Door handle w/hardware
	Door latch w/hardware
	Complete Firebrick kit

ACCESSORIES - MODEL TAHOMA™ 1600GL

OPTIONAL ACCESSORIES		
Cat. No.	Model	Description
BLOWER		
H8873	BLWR-ES-S-150	Blower Kit, Tahoma
OUTSIDE AIR KIT		
UZIAD	UZIAD	Outside Air Coupler Kit (connects outside air ducting, UZI, to stove) AND -
UZI	UZI	Outside Air Ducting Kit (includes 4" insulated flex x 10' long) AND -
H8874	OUTAIRKIT-ES	Outside Air Panel and Air Channel Kit (includes rear pedestal panel and side and front air channels)
MISC.		
H8159	TSPK-B	Touch-Up Paint , Metallic Black, 12 oz. Aerosol

OPTIONAL BLOWER KIT

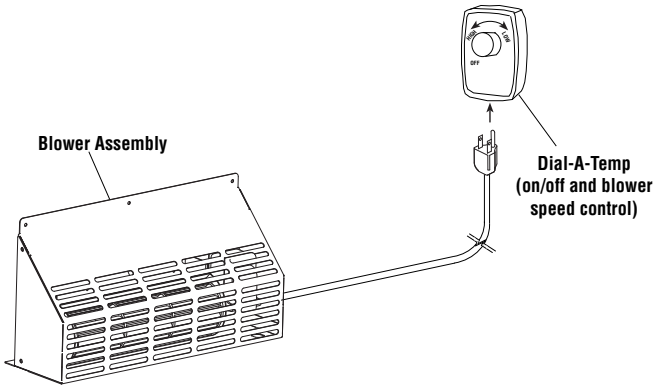

OUTSIDE AIR KITS

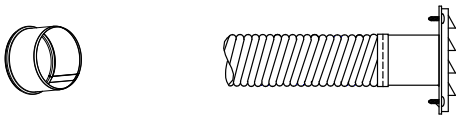

UZIAD UZI

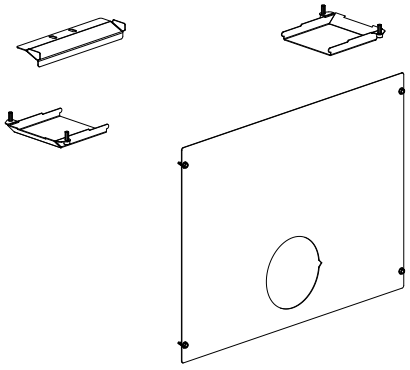

H8874

TOUCH-UP PAINT



NOTE: DIAGRAMS & ILLUSTRATIONS ARE NOT TO SCALE.

SAFETY / LISTING LABEL

CONTACT YOUR LOCAL BUILDING OR FIRE OFFICIALS ABOUT RESTRICTIONS AND INSTALLATION INSPECTION IN YOUR AREA.
LISTED ROOM HEATERS, SOLID FUEL TYPE ALSO FOR USE IN MOBILE HOME INSTALLATION (USA ONLY) PURSUANT TO (UM) 84-HUD

Model: T160GL Report Number 14-186	Serial No.	T160GL-

IRONSTRIKE® HEAT FOR LIFE

Manufactured By:
INNOVATIVE HEARTH PRODUCTS
1502 14th St NW
Auburn, WA 98001 USA

PFS® C US

"PREVENT HOUSE FIRES"

Install and use only in accordance with manufacturer's installation and operating instructions and your local building codes.

CAUTION: Special methods are required when passing chimney through a wall or ceiling, refer to local building codes. Do not connect this unit to a chimney flue serving another appliance.

WARNING: (MOBILE HOME USA Only) An outside air inlet must be provided for combustion, and be unrestricted while unit is in use. Do not install appliance in a sleeping room. The structural integrity of the mobile home floor, walls and ceiling/roof must be maintained. Approval void when label is missing.

Replace glass only with 5mm ceramic.

Model / Modèle: T160GL

Tested to/Testé selon: UL 1482, ULC S627

Type Of Fuel: Solid Wood Only

Optional Blower, Part No. H7917

Blower Electrical Rating: 120V, 60 Hz, 1 Amp

Do not route power cord under or in front of appliance.

Burning improper fuel (i.e. Charcoal) can result in carbon monoxide poisoning, which may lead to death!

WARNING: Do Not obstruct the space beneath the heater.

OPERATE ONLY WITH DOOR CLOSED

This wood heater needs periodic inspection and repair for proper operation. Consult the owner's manual for further information. It is against federal regulations to operate this wood heater in a manner inconsistent with the operating instructions in the owner's manual.
Certification test emission value 2.1 grams/hr per 2020 cordwood standard.

Minimum Clearance to Combustible Materials - Inches (millimeters)

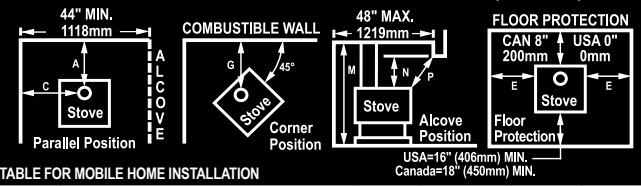

USA=16" (406mm) MIN.
Canada=18" (450mm) MIN.

SUITABLE FOR MOBILE HOME INSTALLATION

PIPE	INSTALLATION	A	C	E†	G	M	N❶	P❶
Single Wall	Residential or Alcove	USA-16" CAN-483mm	USA-21" CAN-610mm	8" 200mm	USA-18" CAN-533mm	84" 2134mm	30" 762mm	36" 914mm
Single w/ Pipe Shield	Residential or Alcove	USA-10" CAN-330mm	USA-18" CAN-533mm	8" 200mm	USA-13.5" CAN-419mm	84" 2134mm	30" 762mm	36" 914mm
Double Wall	Residential or Alcove or Mobile Home*	USA-10" CAN-330mm	USA-18" CAN-533mm	8" 200mm	USA-13.5" CAN-419mm	72" 1829mm	30" 762mm	36" 914mm

† USA=8" (200mm) from door opening, Canada=8" (200mm) from sides and back of unit
❶ Dimensions to Stove Body * Mobile Home - USA only

ALCOVE DIMENSIONS (single wall pipe): Minimum 48"(1219mm) width, maximum 48" (1219mm) depth.
ALCOVE DIMENSIONS (double wall pipe): Minimum 44"(1117mm) width, maximum 48" (1219mm) depth.

FLOOR PROTECTOR: The hearth and/or floor protection must be a non-combustible hearth/floor protector with a minimum thickness of 3/8" (9.5mm), extending beneath the heater and to the front, sides, and rear as indicated.

NOTICE: A header constructed of COMBUSTIBLE material must meet both N & P clearances. All mobile home installations require outside air kits (OAK).

Clearance dimensions are to 6" (152mm) flue collar. If a single wall connector pipe with shield is used, a 1 inch air space is needed between pipe and shield. Shield attaches to rear of stove pipe and must run from stove top to ceiling. Pipe shield shall be UL listed.

CHIMNEY & CONNECTOR: Minimum 6" diameter, minimum 24 MSG black steel connector pipe with listed factory-built chimney suitable for use with solid fuels or masonry chimney. Horizontal connection not tested, refer to local building codes for installation. Restrictions apply! Read instructions before installing.

Minimum alcove width between combustibles: 44" with double wall pipe and 48" all other installations.

MOBILE HOME approved Class A - UL 103HT chimneys and double wall connectors:

- Security
- Metal Fab
- Projet
- Ameri-Tec
- Jakes Evans
- Metalbestos
- Dura-Vent
- Industrial Chimney

RESIDENTIAL chimney systems must be from the same brands as listed for mobile homes but connector pipe may be double wall, single wall or single wall with shield as listed above.

Connector pipe and chimney must be of the same brand.

COMPONENTS REQUIRED FOR INSTALLATIONS: Legs AND Bottom Heat Shield or Pedestal Base attached as shown in the installation instructions. If optional blower is NOT used, Rear Heat Shield Block Off Plate shall be installed.



CAUTION: HOT WHILE IN OPERATION. DO NOT TOUCH, KEEP CHILDREN, CLOTHING AND FURNITURE AWAY. CONTACT MAY CAUSE SKIN BURNS. SEE NAME-PLATE AND INSTRUCTIONS. DO NOT OVERFIRE - IF HEATER OR CHIMNEY CONNECTOR GLOWS, YOU ARE OVERFIRING. INSPECT AND CLEAN CHIMNEY FREQUENTLY - UNDER CERTAIN CONDITIONS OF USE, CREOSOTE BUILDUP MAY OCCUR RAPIDLY. DO NOT USE GRATE OR ELEVATE FIRE - BUILD WOOD FIRE DIRECTLY ON HEARTH. FEED DOOR MUST BE CLOSED DURING FIRING EXCEPT WHEN ADDING FUEL. KEEP ASH DOOR CLOSED TO AVOID EXCESS HEAT. DANGER: RISK OF ELECTRICAL SHOCK. DISCONNECT POWER BEFORE SERVICING UNIT. FOR USE WITH SOLID WOOD FUEL ONLY.

Date of Manufacture / Date De Fabrication

2018	2019	2020	JAN. JANV	FEB. FEVR	MAR. MARS	APR AVR	MAY MAI	JUN JUIN	JUL JUIL	AUG AOÛT	SEP SEPT	OCT OCT	NOV NOV	DEC DEC

U.S. ENVIRONMENTAL PROTECTION AGENCY
Certified to comply with 2020 cordwood standard

Part No. 900902-03 Rev. 0, 08/2018 DO NOT REMOVE THIS LABEL Made in U.S.A.

Innovative Hearth Products
IronStrike® Brand Wood Burning Stove and Insert
Limited Lifetime Warranty

THE WARRANTY
Innovative Hearth Products ("IHP") Limited Lifetime Warranty warrants your IronStrike® Brand Wood Burning Stove or Insert ("Product") to be free from defects in materials and workmanship at the time of manufacture. The Product body, firebox and ceramic glass carry the Limited Lifetime Warranty. Ceramic glass carries the Limited Lifetime Warranty against thermal breakage only. After installation, if covered components manufactured by IHP are found to be defective in materials or workmanship during the Limited Lifetime Warranty period and while the Product remains at the site of the original installation, IHP will, at its option, repair or replace the covered components. If repair or replacement is not commercially practical, IHP will, at its option, refund the purchase price or wholesale price of the IHP product, whichever is applicable. IHP will also pay IHP prevailing labor rates, as determined in its sole discretion, incurred in repairing or replacing such components for up to five years. THERE ARE EXCLUSIONS AND LIMITATIONS to this Limited Lifetime Warranty as described herein.

COVERAGE COMMENCEMENT DATE
Warranty coverage begins on the date of purchase. In the case of new home construction, warranty coverage begins on the date of first occupancy of the dwelling or six months after the sale of the Product by an independent IHP dealer/distributor, whichever occurs earlier. The warranty shall commence no later than 24 months following the date of product shipment from IHP, regardless of the installation or occupancy date.

EXCLUSIONS AND LIMITATIONS
This Limited Lifetime Warranty applies only if the Product is installed in the United States or Canada and only if operated and maintained in accordance with the printed instructions accompanying the Product and in compliance with all applicable installation and building codes and good trade practices.

This warranty is non-transferable and extends to the original owner only. The Product must be purchased through a listed supplier of IHP and proof of purchase must be provided. The Product body and firebox carry the Limited Lifetime Warranty from the date of installation. Vent components, trim components and paint are excluded from this Limited Lifetime Warranty. The following do not carry a Limited Lifetime Warranty but are warranted as follows:

Cast Iron Heat Exchanger – Replacement for five years from the date of installation
Cast iron parts – Replacement for one year from the date of installation
Catalyst – Carries a separate warranty. Refer to the warranty certificate provided for that part
Electrical components – Repair or replacement for one year from date of installation
Gaskets – Replacement for one year from the date of installation.
Gold & nickel plating – Replacement for two years from date of installation. Excludes tarnishing
Refractory & screens – Replacement for two years from date of installation. Excludes hairline cracks
Removable air tubes – Repair or replacement for seven years from date of installation. IHP prevailing labor rates for years one through five.
Labor coverage – Prevailing IHP labor rates apply for the warranty period of the component, unless otherwise noted

Parts not otherwise listed carry a 90 day warranty from the date of installation.

Whenever practicable, IHP will provide replacement parts, if available, for a period of 10 years from the last date of manufacture of the Product.

IHP will not be responsible for: (a) damages caused by normal wear and tear, accident, riot, fire, flood or acts of God; (b) damages caused by abuse, negligence, misuse, or unauthorized alteration or repair of the Product affecting its stability or performance. (The Product must be subject to normal use with approved fuels listed in the Operation Manual provided with the product. Fuel products with abnormal burning characteristics, including but not limited to fuel such as driftwood, coal or plywood and wood products using a binder may burn at excessive temperatures and may cause damage to the Product or may cause it to function improperly; IHP stoves, inserts and high efficiency EPA fireplaces are approved for burning dry seasoned wood only.); (c) damages caused by failing to provide proper maintenance and service in accordance with the instructions provided with the Product; (d) damages, repairs or inefficiency resulting from faulty installation or application of the Product.

Coverage of this Limited Lifetime Warranty is conditional upon the appliance being operated without the use of grates, irons or any other method to elevate the fire.

IHP is not responsible for inadequate system draft caused by air conditioning and heating systems, mechanical ventilation systems, or general construction conditions which may generate negative air pressure in the room in which the appliance is installed. Additionally IHP assumes no responsibility for smoking conditions caused by inadequate chimney height, adjoining trees or buildings, adverse wind conditions or unusual environmental factors and conditions. Certain IHP Products are listed for use with Security Chimneys International, Ltd. chimney systems only. Use of chimney components other than that specified in the Product manual will void the Product warranty.

This Limited Lifetime Warranty covers only parts and labor as provided herein. In no case shall IHP be responsible for materials, components or construction which are not manufactured or supplied by IHP or for the labor necessary to install, repair or remove such materials, components or construction. Additional utility bills incurred due to any malfunction or defect in equipment are not covered by this Limited Lifetime Warranty. All replacement or repair components will be shipped F.O.B. from the nearest stocking IHP factory.

LIMITATION ON LIABILITY
It is expressly agreed and understood that IHP's sole obligation and the purchaser's exclusive remedy under this warranty, under any other warranty, expressed or implied, or in contract, tort or otherwise, shall be limited to replacement, repair, or refund, as specified herein.

In no event shall IHP be liable for any incidental or consequential damages caused by defects in the Product, whether such damage occurs or is discovered before or after replacement or repair, and whether such damage is caused by IHP's negligence. IHP has not made and does not make any representation or warranty of fitness for a particular use or purpose, and there is no implied condition of fitness for a particular use or purpose.

IHP makes no expressed warranties except as stated in this Limited Lifetime Warranty. The duration of any implied warranty is limited to the duration of this expressed warranty.

No one is authorized to change this Limited Lifetime Warranty or to create for IHP any other obligation or liability in connection with the Product. Some states and provinces do not allow the exclusion or limitation of incidental or consequential damages, so the above limitations or exclusions may not apply to you. The provisions of this Limited Lifetime Warranty are in addition to and not a modification of or subtraction from any statutory warranties and other rights and remedies provided by law.

INVESTIGATION OF CLAIMS AGAINST WARRANTY
IHP reserves the right to investigate any and all claims against this Limited Lifetime Warranty and to decide, in its sole discretion, upon the method of settlement.

To receive the benefits and advantages described in this Limited Lifetime Warranty, the appliance must be installed and repaired by a licensed contractor approved by IHP.

Contact IHP at the address provided herein to obtain a listing of approved dealers/distributors. **IHP shall in no event be responsible for any warranty work done by a contractor that is not approved without first obtaining IHP's prior written consent.**

HOW TO REGISTER A CLAIM AGAINST WARRANTY
In order for any claim under this warranty to be valid, you must contact the IHP dealer/distributor from which you purchased the product. If you cannot locate the dealer/distributor, then you must notify IHP in writing. IHP must be notified of the claimed defect in writing within 90 days of the date of failure. Notices should be directed to the IHP Warranty Department at 1769 East Lawrence Street; Russellville, AL 35654 or visit our website at WWW.IRONSTRIKE.US.COM.

Printed in U.S.A. © 2013 Innovative Hearth Products
P/N 900205-00, Rev. B 02/2018

Innovative Hearth Products
1769 East Lawrence Street • Russellville, AL 35654

WARRANTY

Your wood appliance is covered by a limited warranty (provided with the appliance). Please read the warranty to be familiar with its coverage.

Retain this manual. File it with your other documents for future reference.

REPLACEMENT PARTS

See ***Page 24*** for a complete replacement parts list. Use only parts supplied from the manufacturer.

Normally, all parts should be ordered through your IHP distributor or dealer. Parts will be shipped at prevailing prices at time of order.

When ordering repair parts, always give the following information:

1. The model number of the appliance.
2. The Serial Number of the appliance.
3. The part number.
4. The description of the part.
5. The quantity required.
6. The installation date of the appliance.

If you encounter any problems or have any questions concerning the installation or application of this system, please contact your dealer.

Innovative Hearth Products
1769 East Lawrence Street
Russellville, AL 35654
IronStrike.us.com

PRODUCT REFERENCE INFORMATION

We recommend that you record the following important information about your appliance. If you did not purchase your appliance directly from an IHP dealer, then contact us at IronStrike.us.com to find your nearest IHP dealer who will answer your questions or address your concerns.

Model Number _____

Serial Number _____

Date Installed _____

Your Dealer's Name _____

NATIONAL FIREPLACE INSTITUTE NFI CERTIFIED www.nficertified.org

We recommend that our woodburning hearth products be installed and serviced by professionals who are certified in the U.S. by the National Fireplace Institute® (NFI) as NFI Woodburning Specialists or who are certified in Canada by Wood Energy Technical Training (WETT).

Wood Energy Technical Training www.wettinc.ca

Innovative Hearth Products (IHP) reserves the right to make changes at any time, without notice, in design, materials, specifications, and prices, and also to discontinue colors, styles, and products. Consult your local distributor for fireplace code information.

INNOVATIVE HEARTH PRODUCTS

Printed in U.S.A. © 2018 Innovative Hearth Products

P900916-00

APPENDIX 8: Photographs of test set up

Dilution picture Dia 8

Picture 1: Sampling system

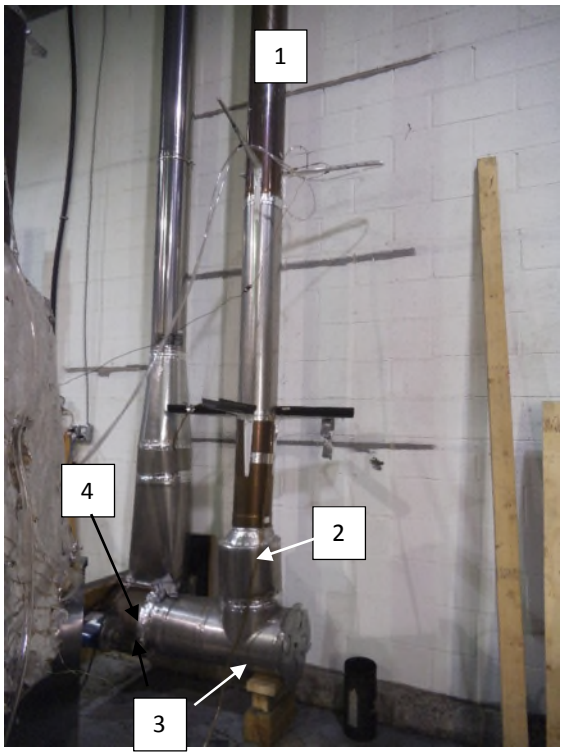

1 : 8 in dia Stainless steel pipe

2 : 16 in. Between sampling probe and lower elbow

3 : Air intake with damper to adjust flow rate

4 : Exhaust blower

Picture 2: Hood and mixing baffle

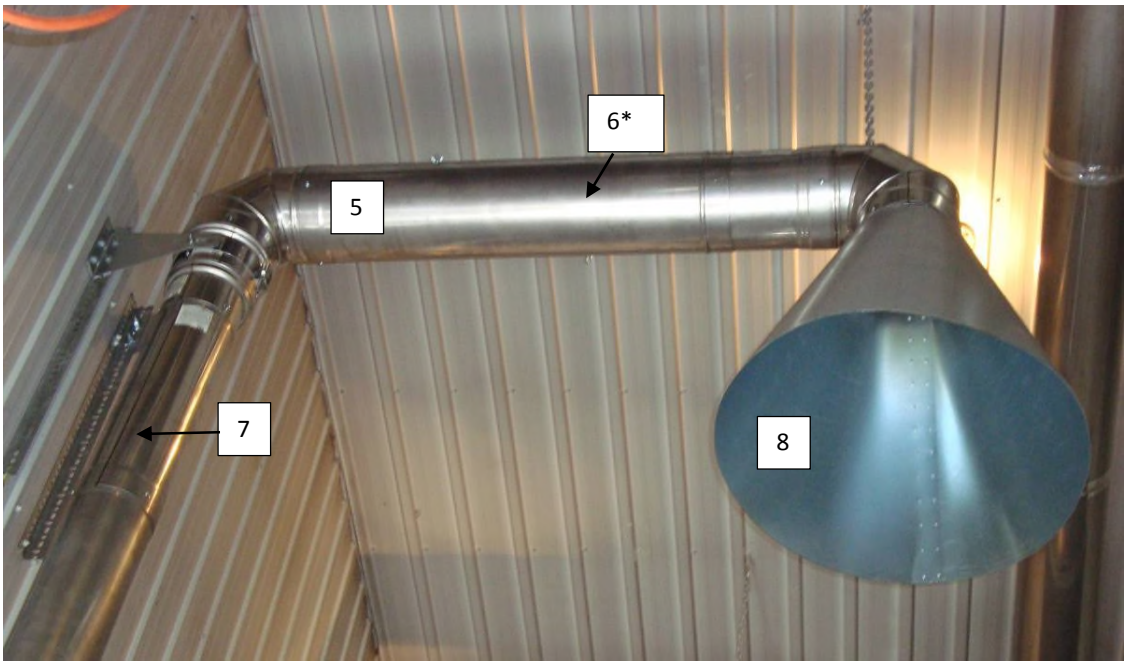

*The arrow point the deflectors inside of the pipe

5 : 8 in. dia. Stainless steel pipe

6 : Mixing baffle (2) location 1 foot between baffles

7 : 10 feet long between velocity port and upper elbow

8 : 48 in. dia. Galvanized steel smoke captures hood

Picture 3: Stack sampling

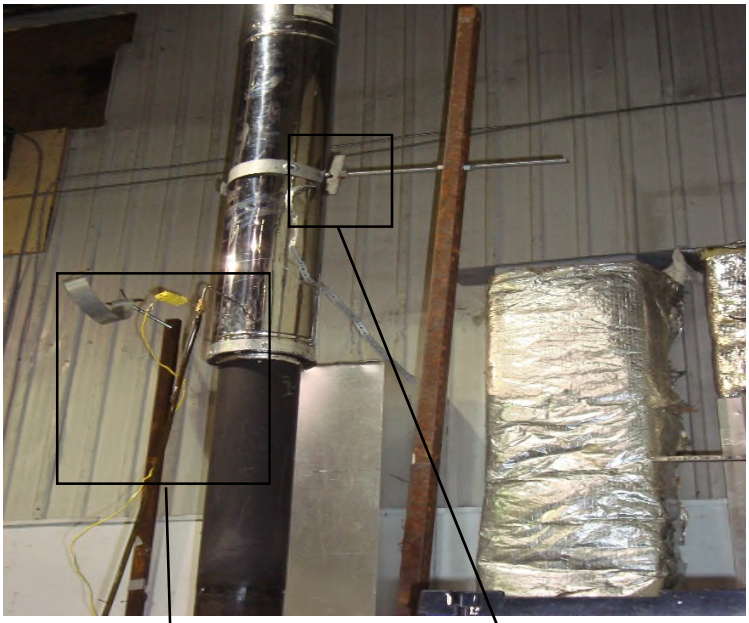

Picture 3.1: Gas analysis and temperature probe

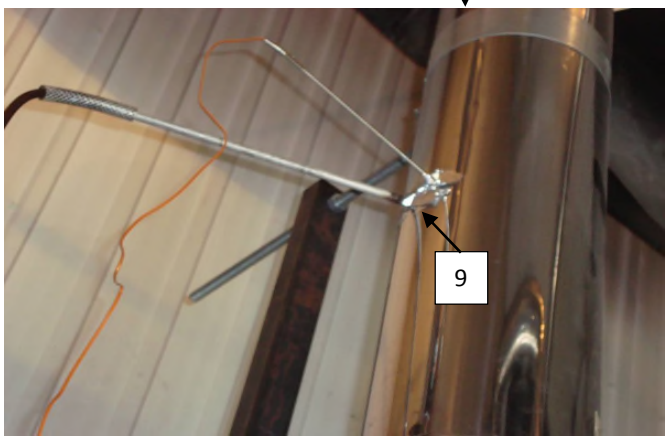

Picture 3.2: chimney support

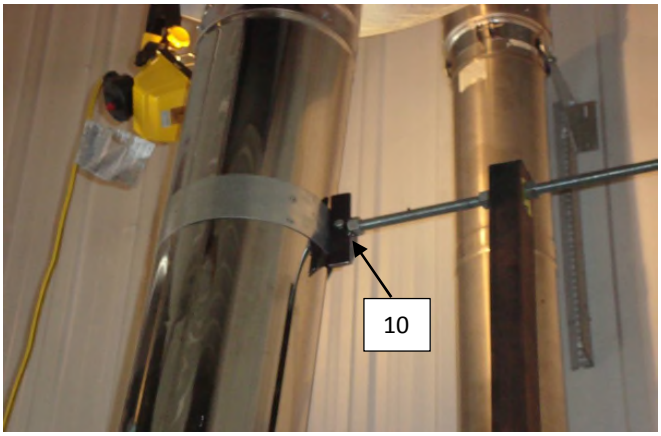

9 : Temperature and gas analyser sampling ports located 9 feet above platform

10 : Exhaust system support bracket

Picture 4: Tunnel flow measurement and sampling probe

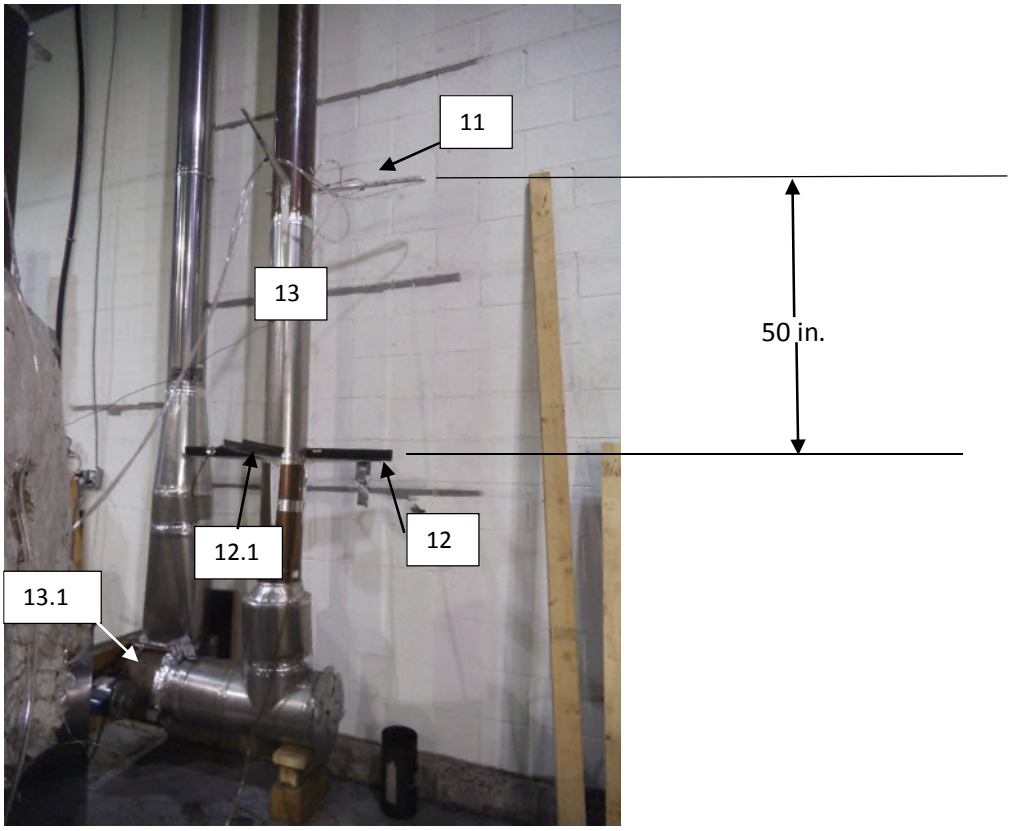

11 : Velocity port

12 :Sampling port, 2 sampling probes with 2x48 mm. dia.filter each. Filter used: Millipore AP4004700

12.1 :Sampling port, sampling probes with 2x48 mm. dia.filter each. Filter used: Millipore AP4004700, for first hour sampling

13 :18 feet long dilution tunnel

13.1 :Extraction blower

Picture 5: Draft sampling



14 : Draft sampling port located 6 in.from the flue outlet

Picture 6: Equipments

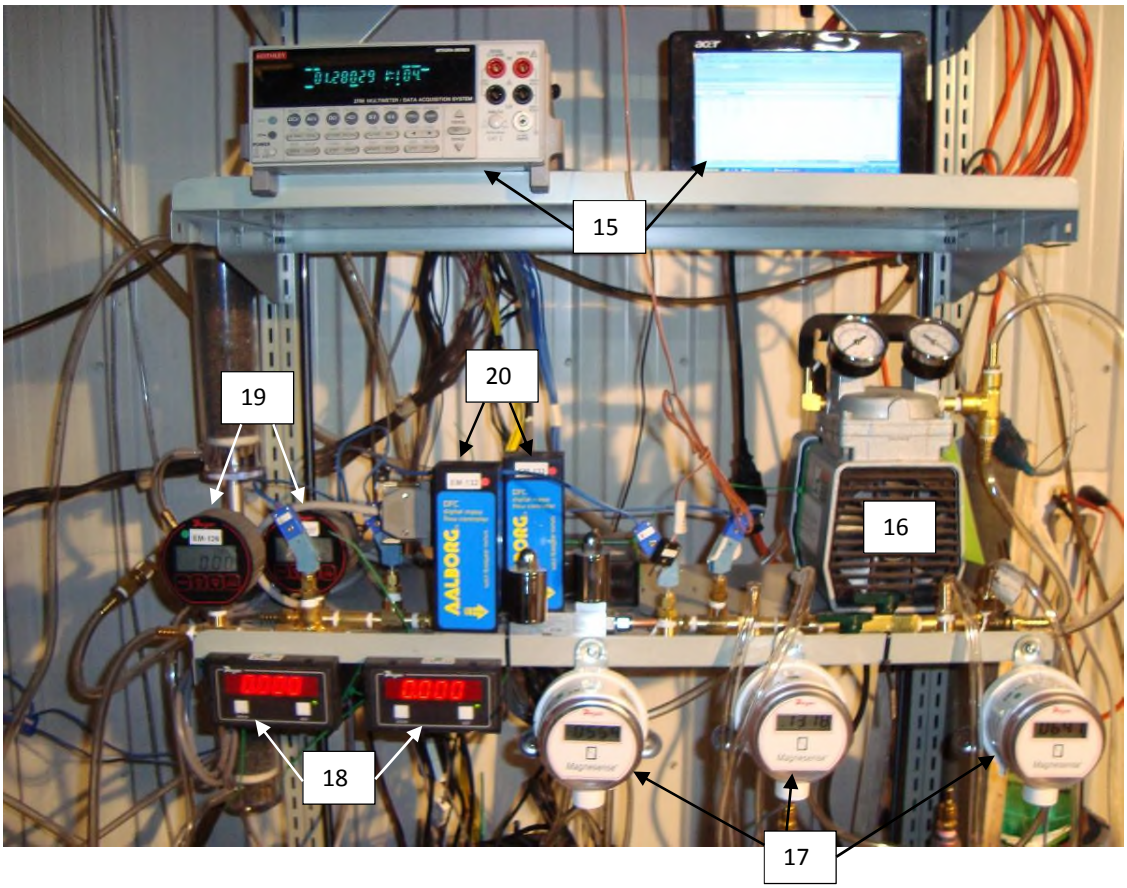

15 : Acquisition system

16 : Vacuum pump

17 : Digital manometer

18 : Digital read out for mass flow meter

19 : Digital vacuum gage

20 : Mass flow meter

Picture 7: Gaz analyser



Picture 8: Reference dry gas meter

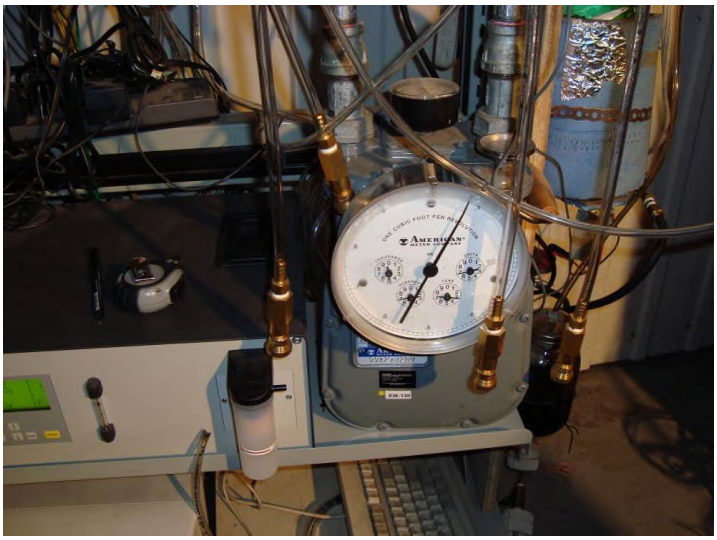

Picture 10: Water flow meter

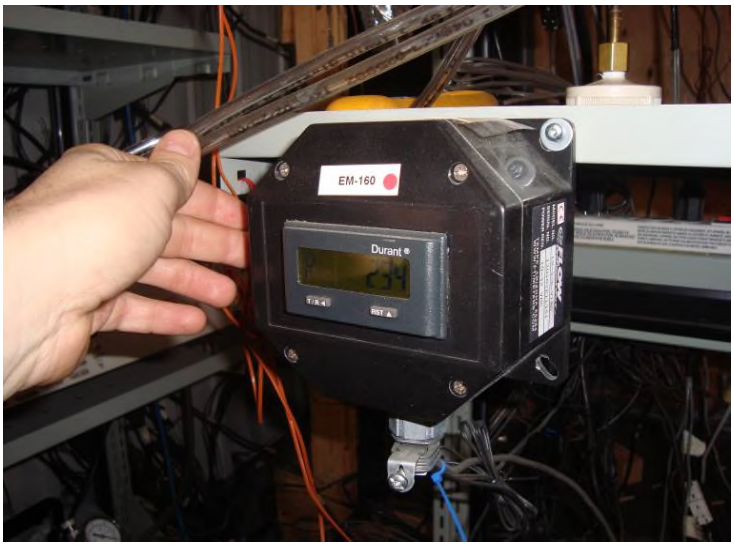

Picture 11: Dry gas meter



Picture 12 : Dilution tunnel sample system

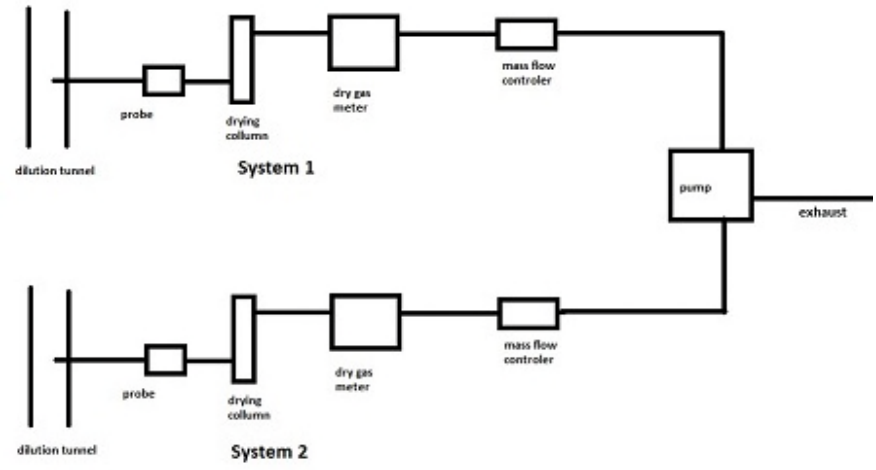

Picture 13: Dilution tunnel

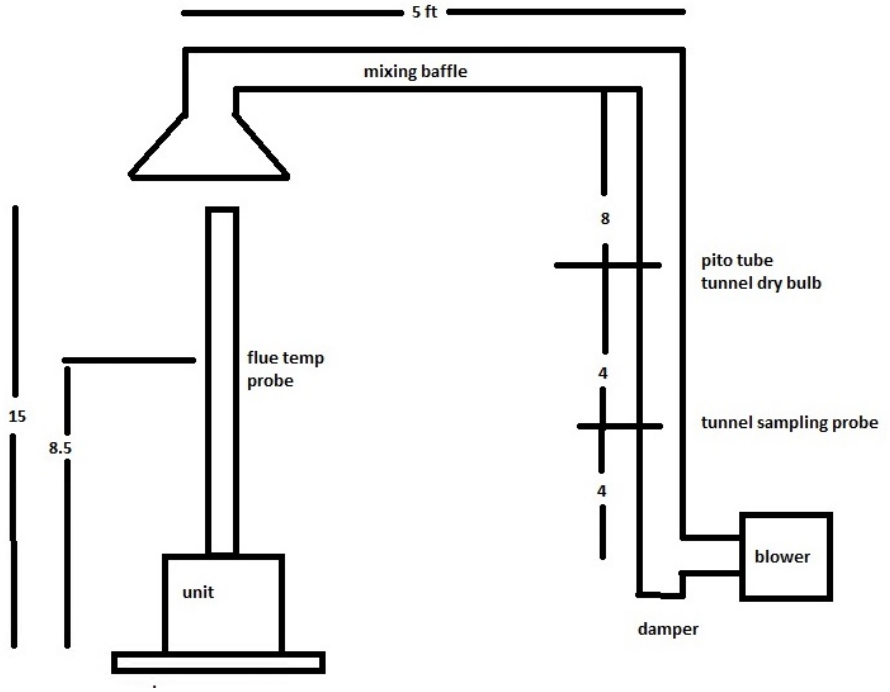

APPENDIX 9: Test load photographs

POLYTESTS
TESTING THROUGH YOUR REALITY

Run 1.1 High









Run 1.2 Low









POLYTESTS
TESTING THROUGH YOUR REALITY

Run 2 Medium









POLYTESTS
TESTING THROUGH YOUR REALITY

Run 3 Low









POLYTESTS
TESTING THROUGH YOUR REALITY

Run 4 Medium









POLYTESTS
TESTING THROUGH YOUR REALITY

Run 5 Medium









APPENDIX 10: Laboratory Operating Procedures

POLYTESTS Services inc.

SFBA EMISSIONS AND EFFICIENCY TESTING LABORATORY OPERATING PROCEDURE

INTRODUCTION

This document provides a step by step guide for the technician conducting tests to EPA standard requirements. Procedures outlined here, when followed, will result in tests in conformance with EPA Methods 28R, ASTME2780, ASTME2515, ASTM E2618, Method 28WHH, Method 28 PTS, Method ALT-125, ASMTE 3053.

The primary measurements to be made are particulate emissions rates. The technician's duties include the following steps.

1. Incoming inspection of test units.
2. Set-up of test units.
3. Preliminary testing to establish unit operating procedures and familiarity with operating controls.
4. Calibration of test equipment.
5. Set-up, checking and operation of sampling apparatus.
6. Conduct of tests including complete record keeping and data recording for non-automated functions.
7. Operation of hardware and software included in automatic data acquisition system.
8. Review and analysis of data at test completion to ensure test validity.

The technician running this test must be familiar with the following documents, which are to be kept in the laboratory at all, times.

EPA METHODS

1. EPA METHODS 28R
2. ASTME2780
3. ASTME2515
4. ASTM E2618
5. METHOD 28WHH
6. METHOD 28 PTS
7. ALT-125
8. ASMTE 3053

I. APPLIANCE INSPECTION AND SET-UP

A. INCOMING INSPECTION

1. Check for completeness of unit including parts, accessories, installation and operating instructions, drawings and specifications etc. Note any discrepancies or missing parts or information.
2. Check for shipping damage. If damage has occurred, notify the laboratory manager. In some cases, repairs may be made, provided the manufacturer and laboratory manager concur that repairs will not affect the unit's performance. If damage is irrepairable, a new unit will need to be obtained.
3. Note whether unit is catalytic of non-catalytic.
4. Mark unit with manufacturer's name, model number, work order number and date received.
5. If unit is safety listed, note label data including listing agency and serial number. If unit is not listed, mark all data sheets "UNLISTED". Test results will not be released until unit passes safety tests without modification unless authorized by laboratory manager.

B. UNIT SET-UP

1. All new units must be operated for a breaking in period as follows.

    a) Non-catalytic units: Ten (48) hours at medium burn rate with Douglas Fir scrap or cordwood.
    b) Catalytic units: Fifty (50) hours at medium burn rate with Douglas Fir scrap or cordwood.

    During these break-in runs the unit may be connected to a lab chimney and fuel additions noted into the corresponding data acquisition file. For catalytic units, a thermocouple must be installed in the catalyst.

    Record catalyst temperature at 1-hour intervals or on chart recorder. Operating should continue until data shows at least fifty (50) hours of operation with catalyst temperature in excess of 500 degrees Fahrenheit (active range).

    For non-catalytic units a stack thermocouple should be installed and stack temperature recorded at 1-hour intervals. Fourthy-height (48) hours minimum burn time with a stack temperature of at least 250 degrees Fahrenheit is required.

    Once break-in is completed, allow unit to cool. Clean unit thoroughly.

2. Unit is to be placed on scale for testing. Prior to proceeding with verification process, scale should be turned on and allowed to warm up for one (1) hour minimum. Zero scale and check calibration with standard weights. One (1) 1 kg weight and one (1) 2 kg weight are provided for this purpose. Use scale verification test form no. EPA-7-TP to record results. If scale fails to reproduce weights within tolerance, check with laboratory manager before proceeding.
3. If scale checks out, place unit on scale and align so chimney will be centered in hood.
4. Attach chimney connector and chimney. Be sure all joints are sealed below sampling points. Chimney and connector should be cleaned with a wire brush. Be sure chimney connector terminates and chimney starts at proper level above scale platform. Chimney must be supported from scale so that it does not touch test enclosure or hood walls.
5. Thermocouples should be attached to surfaces of unit prior to testing. EPA requires a thermocouple on the bottom of the firebox. This must be installed prior to putting the unit on the scale. In some cases, the required thermocouple locations will be inaccessible on finished units. These units should have thermocouples installed by the manufacturer during construction. Check with the laboratory manager if problems are encountered in proper thermocouple attachment.
6. Measure firebox dimensions and record on data forms nos. EPA-2-TP. Make a three-dimensional sketch of the firebox including firebrick, baffles and obstructions. Calculate firebox volume in cubic feet with both addition and subtraction methods using forms nos. EPA-3-TP and EPA-4-TP. See Section 6.2.4 of EPA Method 28 for details of firebox volume determination.
7. If unit is catalytically equipped, additional thermocouples must be installed upstream and downstream of catalyst. Thermocouples should also be placed in the primary and secondary combustion chambers of all units.
8. Plug thermocouples into data acquisition system jacks making a check of locations and jack numbers for each test on data form no. EPA-5-TP.
9. Note that inserts are tested as if they are freestanding stoves.
10. Dilution tunnel should be cleaned prior to each certification test series and at anytime a higher burn rate follows a lower test burn rate.

II. SAMPLING SYSTEM – SET-UP

A. GAS ANALYSIS

1. Instruments should be turned on and allowed to warm up for one (1) hour minimum.

2. Calibrate analyzers as follows:

   NOTE : Prior to proceeding with calibration, make sure to use NIST tracable calibration gas bottles. Adjust flow meter if necessary at each instrument to required flow value.

   a) Using span gas, adjust span control to values specified on calibration gas label.
   b) Using nitrogene, adjust zero controls to provide a 0.00 analyzer readout.

   c) Repeat a) and b) until no further adjustment is required.
   d) Check readout vs. calibration gases (2) labels.

   The CO_2 and CO analyzers are "ZEROED" on nitrogen. The O_2 analyzer is spanned on air and set for 20.9%. It is zeroed on nitrogen as well.

3. Check for response time synchronization.

   a) With no fire in unit, allow reading to stabilize (O_2 should be 20.93, CO and CO_2 should equal O).
   b) Flow the calibration gas in the unit and start stop watch. Note the time required for each unit to reach .90 of the calibration gas bottle value. If all three analyzers reach this value within 15 seconds of each other, synchronization is adequate. If not, contact the laboratory manager. Synchronization is adjusted by internal instrument setting.

4. Set-up sample clean-up and water collection train as follows.

   a) Load impingers as follows:
   Impinger #1: 100 ml distilled water and 5 ml H_2SO_4
   Impinger #2: 100 ml distilled water and 5 ml H_2SO_4
   Impinger #3: Empty
   Impinger #4: 200 – 300 grams silica gel (dry)

b) Place impingers in container and connect with "U TUBES". Grease carefully on bottom half of ball joint so that grease will not get into tubes.

c) Connect filter to first impinger and sample line to last impinger.

e. Leak check system as follows.

1) Plug probe.
2) Turn on sample system.
3) Observe sample flow rotometer and vacuum gauge. If necessary, use vacuum; adjust valve to set vacuum to the maximum inches Hg.
4) If the float in rotometer does not stabilize below 10 on scale, system must be resealed.
5) Repeat leak check procedure until satisfactory results are obtained.

f) Just prior to starting test, fill impinger container with water and ice and record ambiant conditions on data form no. EPA-8-TP.

B. DILUTION TUNNEL SAMPLE TRAIN SET-UP

1. Filters and holders.

a) Clean probes and filter holder front housings carefully and desiccate for at least 24 hours prior to use.
b) Filters should be numbered and filter and probe combinations labeled prior to use.
c) Weigh desiccated filters and probe-filter units on analytical balance. Record weights data form no. EPA-10-TP. Note that probe and front half of front filter are to be weighed as a unit.
d) Carefully assemble filter holder units and connect to sampling systems. Check "DRIERITE" columns for adequate dry absorbent (blue).

2. Leak checking.

a) Each sample system is to be checked for leakage prior to inserting probes in tunnel.
b) Plug probes and start samplers, adjust pump bypass valve to produce a vacuum reading of 5 inches Hg. (NOTE: During test, vacuum must not exceed 5 inches unless posttest leak check shows acceptable results.)

c) Allow vacuum indication to stabilize for two (2) minutes, then record time and dry gas (DGM_1) and (DGM_2) meter readings. Wait ten (10) minutes and record dry gas meter readings again (DGM_3, DGM_4). NOTE: If mark, system is leaking too much and all seals should be checked.

d) Calculate leakage rate as follows.

1) System 1: $\frac{(DGM_3 - DGM_1)}{10} = CFM_1$

2) System 2: $\frac{(DGM_4 - DGM_2)}{10} = CFM_2$

If CFM_1 or CFM_2 is greater than .02 CFM, leakage is unacceptable and system must be resealed.

If CFM_1 or CFM_2 is greater than 0.04 X sample rate, leakage is unacceptable. For most tests, the sample rate will be about 0.15 CFM, thus leakage rates in excess of 0.04 X 0.15 = 0.006 CFM are not acceptable. Record leakage rates on form no. EPA-5-TP

e) Once leakage check is satisfactory, unplug probe and set flow to appropriate rate for test. This should be done in the minimum amount of time necessary and with the probes in ambient air. Do not insert probes in tunnel until the start of the test run. When flow is established, replug probes to prevent contamination.

III. TEST CONDUCT

A. FUEL LOAD

1. Determine optimum load weight by multiplying firebox volume in cubic feet by 7 or (10 and 12 for cordwood method). This is the load weight on an as-fired basis.
2. Determine piece size to obtain the requested load configuration and meet the test load weight criteria. The load should consist of the following: **TO BE DETERMINED**
3. Weigh out test load and adjust weight by shortening all pieces equally if necessary. Record individual piece load on form no. EPA-11-TP.

4. Measure and record moisture content of each fuel piece using Delmhorst moisture meter. Determine if fuel load moisture content is in required range. If not, construct new load using wood with required moisture content. All wood in the humidity chamber should be within range. Contact project manager if you cannot find suitable pieces. Record moisture of each individual piece load on form no. EPA-11-TP.

B. UNIT START-UP

1. Before lighting a fire, turn on dilution tunnel and set tunnel velocity to 500ft/min Record readings on data form no. EPA-9-TP.
2. Check draft imposed on cold stove with all inlets closed and a draft gauge in the chimney. If draft is greater than 0.005 inches water column, adjust tunnel to stack gap until draft is less than 0.005.
3. Check for ambient airflow around unit with hot wire anomometer. Must be less than 50 ft/min.
4. Check all equipment for proper operation. Analyzers should be on and in sample mode. Computer should be loaded with test program and awaiting test start command.
5. Zero scale and start fire with uncolored newspaper and kindling representing 10 % of test load with the same type of fuel.
6. Once kindling is burning well after 5 minutes, add splitted pieces having a bottom surface around 4 sq. inches and representing 25% of test load weight. Operate at high fire for 15 minutes. Then adjust settings to intended test run levels as per the manufacturer's.
7. Following addition of pretest fuel load (splitted pieces), start computer for data logging.
8. All fuel additions, air intake settings and operational characteristics shall be noted with associated time stamp on form no. EPA-1-TP.

C. TEST RUN

1. Once the targeted test fuel bed weight is obtained, the test is to be started as follows:

   a) Insert the sample probes into the tunnel being careful not to hit sides of tunnel with probe tip.
   b) Check tunnel pitot tube for proper position. (Pitot should be carefully cleaned prior to each test.)
   c) Turn on probe sample systems and stack sampler.
   d) Open stove door, rake coals and load stove as follows: **TO BE DETERMINED**
   e) Close door or follow manufacturer's start-up procedures. (Five (5) minutes maximum time before all doors and controls must be set to final positions for duration of test. 15 minutes allowed for ALT-125 method))
   f) An alarm will sound an audible signal at the (10) minutes intervals. This signal a reading interval. You must verify at each interval that the following readings are correctly logged by the data acquisition system and make observations of any unusual or non-routine events that could occur.

      1) Rotometer readings.
      2) Tunnel pitot tube reading.
      (Zero regularly between readings)
      3) Gas meter readings.
      4) Temperature readings.
      5) Draft reading
      6) Test laod weight
      7) CO, CO_2 and O_2 readings
      8) Observations of any unusual or non-routine events.

   g) During the test, any condition approaching unacceptable limits will be noted. The filter probes and housings are installed in small holders just outside the tunnel. If the filter temperature gets too high, you will have to increase the water flow through the cooling unit until acceptable temperatures are obtained. In between readings, check on other equipment. Be sure dryers and filters are working and monitor impinger train for proper water and ice levels etc.

   h) When the fuel charge is consumed, it will signal end of test and shut down the sampling systems. When this occurs,

remove filter holder and probes from tunnel and impingers from sample line.

IV. POST TEST PROCEDURES

A. SAMPLE RECOVERY – FILTER TRAINS

1. Carefully clean outside of probes and filter housings with alcohol.
2. Disassemble filter holder and transfer filters to clean petri dish. Scrape gasket with scalpel and collect any loose material on filters.
3. Place probe and front half of first filter holders (still assembled) and filters in desiccator. Allow 24-hour desiccation before weighing.
4. Weigh probe filter holder units and filters at six (6) hour intervals until weight change between weighings is less than 0.2 mg. Record all weights taken on data form no. EPA-10-TP.

B. CALCULATION OF RESULTS

The computer program carries out all final calculations. When run, it will ask for data from forms used during the test. Enter data as called for.

GENERAL

This guide cannot cover every possible contingency, which may develop during a particular test program. Many questions, which may arise, can be answered by a complete understanding of the test standards and their intent. When in doubt on any detail, check with the laboratory manager and be sure you understand the procedures involved.

It is critical that all spaces on the data forms be properly filled in. Each test must be represented by a complete record of what was done and when.

APPENDIX 13: Operating instruction

Operating instruction for High burn rate Cord wood method ALT-125, ASTME3053

- Start the fire with approximately 4.3 lbs. of startup fuel, 3 lbs. of kindling and crumple paper.
- close the door.
- When left approximately 2.5 lbs. from the startup load, the high burn rate load can be inserted.
- Close the door.
- After 10 minutes the convection fan can be started at the maximum speed.

Operating instruction for Medium burn rate Cord wood method ALT-125, ASTME3053

- From the high burn rate coal bed, when 2.0 lbs. left, the medium load can be insert in the firebox.
- Open the door
- Insert the 18.5 lbs. load in the wood heater
- Close the door immediately after load insertion
- Keep the combustion air damper fully open for 15 minutes
- After 15 minutes close the damper to medium position (refer to drawings Appendix 6)
- Start the convection fan to the maximum speed after 25 minutes.

Operating instruction for Low burn rate Cord wood method ALT-125, ASTME3053

- From the high burn rate coal bed, when 2.0 lbs. left, the medium load can be insert in the firebox.
- Open the door
- Insert the 18.5 lbs. load in the wood heater
- Close the door immediately after load insertion
- Keep the combustion air damper fully open for 15 minutes
- After 15 minutes close the damper to minimum position (refer to drawings Appendix 6)
- Start the convection fan to the maximum speed after 25 minutes

UNITED STATES ENVIRONMENTAL PROTECTION AGENCY
RESEARCH TRIANGLE PARK, NC 27711

FEB 2 8 2018

OFFICE OF
AIR QUALITY PLANNING
AND STANDARDS

Mr. Justin White
Hearthstone QHPP, Inc.
#17 Stafford Ave.
Morrisville, VT 05661

Dear Mr. White,

I am writing in response to your letter dated January 12, 2018, regarding wood heaters manufactured by Hearthstone QHPP, Inc. (Hearthstone). This response, dated February 28, 2018, supercedes our previous response (dated February 26, 2018) to correct an inaccuracy regarding required changes to ASTM E3053-17.

You are requesting to use an alternative test method, using cord wood, as referenced in section 60.532(c) of 40 CFR part 60, Subpart AAA, Standards of Performance for New Residential Wood Heaters (Subpart AAA) to meet the 2020 cord wood alternative compliance option. The 2020 cord wood alternative compliance option states that each affected wood heater manufactured or sold at retail for use in the United States on or after May 15, 2020, must not discharge into the atmosphere any gases that contain particulate matter in excess of 2.5 g/hr. Compliance must be determined by a cord wood test method approved by the Administrator along with the procedures in 40 CFR 60.534. You have requested approval to use the procedures and specifications found in ASTM Method E3053-17, a cord wood test method titled, "Standard Test Method for Determining Particulate Matter Emissions from Wood Heaters using Cordwood Test Fuel," in conjunction with ASTM E2515-11 and Canadian Standards Administration (CSA) Method CSA-B415.1-10, which are specified in 40 CFR 60.534.

We understand that Hearthstone is also requesting that the alternative method proposed above be approved to apply broadly to all wood heaters manufactured by Hearthstone meeting the requirements of Subpart AAA, from the approval date of this request until such time that Subpart AAA is revised or replaced to require a different cord wood certification method, providing all requirements of section 60.533 of Subpart AAA are met.

With the caveats set forth below, we approve your alternative test method request for certifying wood heaters using ASTM E3053-17 in conjunction with section 60.534 of Subpart AAA to meet the 2020 cord wood compliance option until such time that Subpart AAA is revised or replaced to require a different cord wood certification method. We also approve application of this alternative method to all wood heaters manufactured by Hearthstone meeting the requirements of Subpart AAA.

As required in Subpart AAA, section 60.354(d), you or your approved test laboratory must also measure the first hour of particulate matter emissions for each test run using a separate filter in one of the two parallel sampling trains. These results must be reported separately and also included in the total particulate matter emissions per run. Also, as required by Subpart AAA, section 60.534(e), you must have your approved laboratory measure the efficiency, heat output, and carbon monoxide emissions of the tested wood heater using CSA-B415.1-10. For measurement of particulate matter emission concentrations, ASTM 2515-11 must be used.

The following change to ASTM E3053-17 must be followed:

1. Coal bed conditions prior to loading test fuel. The coal bed shall be a level plane without valleys or ridges for all test runs in the high, low, and medium burn rate categories.

The following changes to ASTM E2515-11 must be followed:

1. The filter temperature must be maintained between 80 and 90 degrees F during testing.

2. Filters must be weighed in pairs to reduce weighing error propagation; see ASTM 2515-11, Section 10.2.1 Analytical Procedure.

3. Sample filters must be Pall TX-40 or equivalent Teflon-coated glass fiber, and of 47 mm, 90 mm, 100 mm, or 110 mm in diameter.

4. Only one point is allowed outside the +/- 10 percent proportionality range per test run.

A copy of this letter must be included in each certification test report where this alternative test method is utilized.

It is reasonable that this alternative test method approval be broadly applicable to all wood heaters subject to the requirements of 40 CFR part 60, Subpart AAA. For this reason, we will post this letter as ALT-125 on our website at *http://www3.epa.gov/ttn/emc/approalt.html* for use by other interested parties. As noted earlier in this letter, this alternative method approval is valid until such time that Subpart AAA is revised or replaced to require a different cord wood certification method, and at such time, this alternative will be reconsidered and possibly withdrawn.

If you have additional questions regarding this approval, please contact Michael Toney of my staff at 919-541-5247 or toney.mike@epa.gov.

Sincerely,

Steffan M. Johnson, Group Leader
Measurement Technology Group

cc: Amanda Aldridge, EPA/OAQPS/OID
Adam Baumgart-Getz, EPA/OAQPS/OID
Rafael Sanchez, EPA/OECA
Michael Toney, EPA/OAQPS/AQAD