COUNTRY STOVES
A LIFETIME OF WARMTH

INSTALLATION AND OPERATION MANUAL

EPA Certified Wood-Burning Fireplace Inserts

Save These Instructions For Future Reference

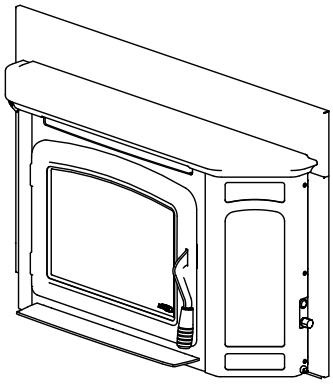

P/N 901251-00, Rev. C, 09/2026

Wood-Burning Fireplace Inserts
Model Carrollton™ 300

With Innovative Thermal Fin Technology (TFT™)

PFS C US

Carrollton 300
Report # 25-476

This appliance must be properly installed and operated in order to prevent the possibility of a house fire. Please read this entire installation and operation manual before installing and using your wood fireplace insert. Failure to follow these instructions could result in property damage, bodily injury or even death. Contact your local building or fire officials to obtain a permit and information on any installation requirements and inspection requirements in your area.

NATIONAL FIREPLACE INSTITUTE
NFI
CERTIFIED
www.nficertified.org

We recommend that our woodburning hearth products be installed and serviced by professionals who are certified in the U.S. by the National Fireplace Institute® (NFI) as NFI Woodburning Specialists or who are certified in Canada by Wood Energy Technical Training (WETT).

Wood Energy Technical Training
www.wettinc.ca

⚠ WARNING

- **Hot! Do not touch! The glass and surfaces of this appliance will be hot during operation and will retain heat for a while after shutting off the appliance. Severe burns may result.**
- **Carefully supervise children in the same room as appliance.**

CONGRATULATIONS!

When you purchased your new wood-burning fireplace insert, you joined the ranks of thousands of individuals whose answer to their home heating needs reflects their concern for aesthetics, efficiency and our environment. We extend our continued support to help you achieve the maximum benefit and enjoyment available from your new wood-burning fireplace insert.

Thank you for selecting a Country Stoves wood-burning fireplace insert as the answer to your home heating needs.

TABLE OF CONTENTS

Using This Manual 2
Important Safety Information 3
Testing Information 4
Draft Requirements 4
Selecting the Proper Venting System 4
Chimney Height Requirements 5
Negative Pressure Warning 5
Required Clearances 6
Specifications 7
Hearth Protection 8
Insert Installation 9
Masonry Fireplace Pre-Installation Preparation 9
Chimney Liner Installation 10
Positive Flue Connection 10
Offset Boxes 11
Installation Procedure For Masonry Fireplaces 11
Typical Installation Figures 12
Outside Combustion Air Kit Installation 13
Brick and Baffle Installation 14
Secondary Tube and Baffle Board Replacement 15
Timer Replacement 16
Post Installation Checks 17
Attaching Control Labels 18
Paint Curing 18
Burn-In Period 18
Operating Hints 18
Door Operation 18
Starting and Maintaining a Fire 19-20
Fuel 20
Getting the Most Out of Your appliance 21
Maximizing Your appliance's Overall Efficiency 21
Achieving Clean, Long Burns 21
Blower Operation 22
Do's and Don'ts 23
Smoke Detector Recommended 23
Carbon Monoxide Monitor Recommended 23
Maintenance 24-25
Door Hinges 24
Door Latch 24
Door Gasket 24
Plated Accessories 24
Baffle Boards 24
Creosote Formation and Need for Removal 24
Glass Replacement 25
Glass Cleaning Guidelines 25
Troubleshooting 26
Replacement Parts List 27-28
Accessories 29
Safety / Listing Labels 30
Warranty 31
Product Reference Information 32

USING THIS MANUAL

Please read and carefully follow all of the instructions found in this manual. Please pay special attention to the safety instructions provided in this manual.

PRODUCT IS SUBJECT TO CHANGE WITHOUT NOTICE

IMPORTANT SAFETY AND WARNING INFORMATION

READ THIS MANUAL IN ITS ENTIRETY AND UNDERSTAND THESE RULES TO FOLLOW FOR SAFETY.

1. When this room heater is not properly installed, a house fire may result. To reduce the risk of fire, follow the installation instructions. Contact local building or fire officials about restrictions and installation inspection requirements in your area.
2. Wear gloves during installation to avoid injury from sharp edges on the insert and/or its parts.
3. This unit is designed and engineered to burn only dry, well-seasoned wood. Burning wet wood will greatly reduce your inserts efficiency, produce excessive amounts of smoke and can cause dangerous chimney fires due to creosote build-up.
4. Before opening the door, the draft control must be fully open to avoid possible combustion flash (ignition of hot volatile gases as the door is opened).
5. Never use gasoline, gasoline-type lantern fuel, kerosene, charcoal lighter fluid, or similar liquids to start or 'freshenup' a fire in this heater. Keep all such liquids well away from the heater while it is in use. DO NOT USE CHEMICALS OR FLUIDS TO START THE FIRE.
6. While burning, fuel utilizes oxygen from the air in the room. Be sure to allow an adequate amount of fresh air into the room where the insert is burning.
7. The outside surface of the insert will be hot while burning properly and can set items like clothing and curtains on fire. Keep furnishings and other combustible materials away from the insert. Using the heat from the insert to dry wet clothing can be hazardous if clothes are placed too near the surface of the insert.
8. HOT WHILE IN OPERATION. KEEP CHILDREN, CLOTHING FURNISHINGS AND COMBUSTIBLE MATERIAL A CONSIDERABLE DISTANCE AWAY. CONTACT MAY CAUSE SKIN BURNS. Do not allow children to play near the appliance without close supervision. Do not touch the appliance while it is burning. Use extreme caution while the unit is in use. Surface temperatures become dangerously hot and can cause serious burns.
9. Do not allow anyone to operate the insert who is not familiar with the operating instructions.
10. Attempts to achieve heat output rates that exceed insert design specifications can result in permanent damage to the insert. Never leave your insert unattended on high burn rates. This may cause overfiring. Overfiring the insert may cause a house fire. If the insert glows, you are overfiring.
11. Keep a water hose or hand-operated fire extinguisher close for safety.
12. Smoke Detectors - Since there are always several potential sources of fire in any home, we recommend installing smoke detectors. If possible, install the smoke detector in a hallway adjacent to the room (to reduce the possibility of occasional false activation from the heat produced by the insert). If your local code requires a smoke detector be installed within the same room, you must follow the requirements of your local code. Check with your local building department for requirements in your area.
13. Inspect your chimney at least once a month during the burning season to check for soot and creosote accumulations. Any accumulations over 1/8" thick should be removed by a professional chimney sweep. Do not attempt to burn out heavy creosote accumulations with a hot fire. If large accumulations are occurring, review your burning procedures.
14. If a creosote fire should develop, the fire department should be called immediately and then attempts should be made to control the fire until assistance arrives. If a "runaway" fire should develop causing over-heating of the insert, the door and draft regulators should be closed immediately. The fire should die down once deprived of oxygen. After a severe chimney fire, the complete chimney system should be checked before further use.
15. Do Not Use Grate Or Elevate Fire - Build Wood Fire Directly On Hearth (firebrick). Do not use andirons or other methods of supporting the fuel.
16. Please read this entire manual before you install and use your new room heater. Failure to follow instructions may result in property damage, bodily injury, or even death.
17. Check all local building and safety codes before installation. The installation instructions and appropriate code requirements must be followed exactly and without compromise. In the absence of local codes the following standards and codes must be followed.
18. In the U.S.A, install in accordance with the National Fire Protection Association's Code, NFPA 211, Standards for Chimneys, Fireplaces, Vents and Solid-Fuel-Burning Appliances, or similar regulations, may apply to the installation of a Solid-Fuel-Burning appliance in your area.
19. DO NOT CONNECT TO OR USE IN CONJUNCTION WITH ANY AIR DISTRIBUTION DUCTWORK UNLESS SPECIFICALLY APPROVED FOR SUCH INSTALLATIONS.
20. WARNING: BURNING IMPROPER FUEL (I.E. CHARCOAL) CAN RESULT IN CARBON MONOXIDE POISONING, WHICH MAY LEAD TO DEATH!
21. Carbon Monoxide Poisoning – early signs of carbon monoxide poisoning resemble the flu with headaches, dizziness, or nausea. If you have these signs, get fresh air at once! Have the heater inspected by a qualified service technician. Some people are more affected by carbon monoxide than others. These include pregnant women, people with heart or lung disease or anemia, those under the influence of alcohol, and those at high altitudes.
22. Failure to use manufacturer provided parts, variations in techniques and construction materials or practices other than those described in this manual may create a fire hazard and void the limited warranty.
23. Do not make any make-shift compromises during installation. Any modification or alteration may result in damage to the appliance or dwelling and will void the warranty, certification and listings of this unit.
24. These appliances are designed as supplemental heaters. Therefore, it is advisable to have an alternate heat source when installed in a dwelling.
25. Do Not Overfire – If Heater or Chimney Connector Glows, You Are Overfiring.
26. DO NOT CONNECT THIS UNIT TO A CHIMNEY FLUE SERVING ANOTHER APPLIANCE.
27. DO NOT BURN GARBAGE OR FLAMMABLE FLUIDS SUCH AS GASOLINE, NAPHTHA OR ENGINE OIL.
28. These appliances shall not be Installed In a factory-built fireplace.
29. DO NOT INSTALL IN A TRANSPORTABLE BUILDING.

30. **This wood heater has a manufacturer-set minimum low burn rate that must not be altered. It is against federal regulations to alter this setting or otherwise operate this wood heater in a manner inconsistent with operating instructions in this manual.**

⚠ WARNING

DO NOT INSTALL IN SLEEPING ROOM

⚠ WARNING

This product can expose you to chemicals including Carbon Black, which is known to the State of California to cause cancer, and Carbon Monoxide, which is known to the State of California to cause birth defects or other reproductive harm. For more information go to www.P65Warnings.ca.gov

TESTING INFORMATION

This manual describes the installation and operation of the Carrollton™ 300 non-catalytic wood heaters. These heaters meet the U.S. Environmental Protection Agency's emissions limits, and are compliant with 2020 EPA NSPS particulate emission standards. This heater has been developed, tested and constructed in accordance with the requirements of UL 1482-2022 / CAN/ULC 628:2022 / UL/ULC 1390:2024 and HUD standards and is listed by PFS TECO. It has been approved for residential installations.

Model	Emission Rate	BTU/hr Output Range	Max. Output BTU/hr	Tested Average Efficiency
ML300GL	1.8 g/hr	13,693 – 39,232	100,000	80.0% LHV

DRAFT REQUIREMENTS

Your wood fireplace insert is dependent upon a properly functioning chimney for optimum performance. It is a high efficiency appliance that loses much less heat up the chimney than older appliances and fireplaces. For this reason it is important to match the fireplace insert to the chimney. The chimney has two functions:

1. It draws combustion air into the appliance (without air, no fuel will burn) and
2. It exhausts combustion by-products. Your new appliance is what is known as a "natural draft" appliance.

The appliance depends solely on the natural draft of the chimney system to draw combustion air into the unit. Draft is the force that moves air from the appliance up into the chimney. The amount of draft in your chimney depends on the length of the chimney, local geography, nearby obstructions and other factors. Too much draft may cause excessive temperatures in the appliance (overfiring). Slow or inadequate draft equals poor combustion and possible smoking problems. The following are some conditions that may contribute to poor chimney draft:

1. A chimney too large for your appliance.
2. A chimney with not enough height to produce adequate draft.
3. A chimney with excessive height (this may allow exhaust to cool too much before exiting, which will stall the rate the exhaust exits).
4. Offsets in the venting system are too restrictive (see *Chimney Guidelines)*. Inadequate draft will cause the appliance to leak smoke into the room through the fireplace insert and the chimney connector joints.

Excessive draft may cause an uncontrollable burn or a glowing red fireplace insert or chimney part.

Overfiring Damage - If the heater or chimney connector glows, you are overfiring. Other symptoms may include: Cracking, warping or burning out of components, plated accessories may turn color, stove or insert glass may develop a haze, which will not come off with cleaning.

Overfiring of a stove or fireplace insert is a condition where excessive temperatures are reached, beyond the design capabilities of the appliance. The damage that occurs from overfiring is not covered under the manufacturer's limited warranty.

Also see *Troubleshooting* on ***Page 26***.

SELECTING THE PROPER VENTING SYSTEM

The appliance is merely one component of a larger system. The other equally important component is the venting system. This is necessary for achieving the required flow of combustion air to the fire chamber and for safely removing unwanted combustion by-products from the appliance. If the venting system's design does not promote these ends, the system may not function properly. Poorly functioning venting systems may create performance problems as well as be a safety hazard. **A draft test should read greater than .04" W.C. (inches water column) and less than .08" W.C**. As per NFPA-211 standard (see paragraph below), the installer must take into account all variables within the installation and install the appliance in such a manner that satisfies the draft requirements of the appliance. See *Chimney Guidelines* below to assist you in selecting the proper venting system for your installation.

American National Standards Institute ANSI/NFPA 211, Standard for Chimneys, Fireplaces, Vents, and Solid Fuel-Burning Appliances - See Draft Section: A chimney or vent shall be so designed and constructed to develop a flow sufficient to completely remove all flue and vent gases to the outside atmosphere. The venting system shall satisfy the draft requirements of the connected appliance in accordance with the manufacturer's instructions.

Chimney Guidelines:

- This appliance requires approximately 12 feet minimum of "effective draw" provided by the venting system. As a rule of thumb, every 90 degree total direction change in the venting will result in a loss of approximately 5 feet of "effective draw." Example: If two 45 degree offsets are used, subtract 5 feet from the actual vertical vent height to determine your "effective draw." In this case if you had 14 feet of vertical vent, the effective draw would only be approximately 9 feet (14 ft. - 5 ft. = 9 ft.), therefore it may be necessary to add additional height to the venting system.
- In well insulated and weather tight homes, it may be difficult to establish a good draft up your chimney. The poor draft is caused by a shortage of air in the house *(see Negative Pressure Warning on **Page 5**)*.

CHIMNEY HEIGHT REQUIREMENTS

The chimney must extend 3' above the level of roof penetration and a minimum of 2' higher than any roof surface within 10' (see below). Check with your local building officials for additional requirements for your area.

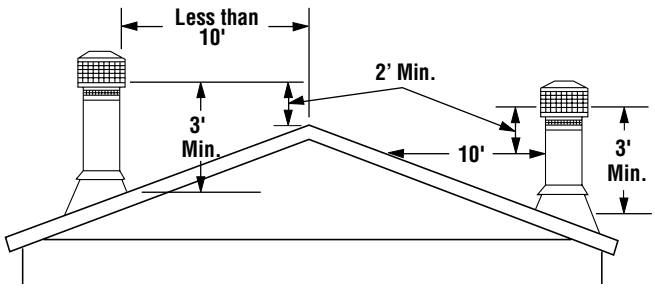

***Figure 1** - Chimney Height Requirements*

To pass inspection in nearly any jurisdiction, the chimney must meet both safety and exhaust flow requirements.

**** Ref. USA - National Standard, NFPA 211-latest edition. Vents installed with a listed cap shall terminate in accordance with the terms of the cap's listings.***

NEGATIVE PRESSURE WARNING

This appliance is not designed to be operated in a negative pressure. In very airtight homes with large kitchen exhaust fans, furnace cold air returns, fresh air exchange systems and any other air system in close proximity to the heating appliance may create a negative pressure in the same room as the heating appliance. This can create dangerous back drafting of the fireplace insert and chimney joints, drawing combustion by-products into the home. Be sure your home has adequate makeup air to eliminate negative pressures caused by the above-mentioned sources. IHP accepts no liability for damages resulting from negative pressures described above.

Ventilation Requirements - Provide adequate air for combustion. The fresh air requirements of this appliance must be met within the space where it will be installed. Ventilation is essential when using a Solid-Fuel-Burning heater. In well insulated and weather tight homes, it may be difficult to establish a good draft up the chimney (caused by a shortage of air in the home). The lack of air is caused by many common household appliances which exhaust air from the home (such as a furnace, heat pump, air conditioner, clothes dryer, exhaust fans, fireplaces, and other fuel burning appliances). Also, the combustion process of this heater uses oxygen from inside the dwelling. If the available fresh air delivery in the dwelling is insufficient to support the demands of these appliances, problems can result (i.e. excessive negative pressure can develop in the dwelling which will affect the rate at which this appliance can draft thus resulting in performance problems. To correct this problem it may help to open a window (preferably on the windward side of the house).

NOTE: DIAGRAMS & ILLUSTRATIONS ARE NOT TO SCALE.

Carrollton™ 300

REQUIRED CLEARANCES

WARNING: BE ABSOLUTELY SURE THE DISTANCE BETWEEN THE HEATER AND THE SURFACE OF ANY COMBUSTIBLE CONSTRUCTION IS NOT LESS THAN SHOWN ON THIS PAGE.

Dimension	A*	B*	C*	D*	E(1)
	26”	24”	8”	8”	8”
Dimension	F (1)	G	H	J(2)	M
	18”	15”	22-5/8”	5-3/8”	48-3/4”

Table 1 - Clearances

* Reduced clearances may be available for A, B, C and D dimensions per NFPA 211 - latest edition, Standard for Chimneys, Fireplaces, Vents and Solid Fuel-Burning Appliances. See section on “Reduction of Appliance Clearance with Specified Forms of Protection.”

(1) 18” minimum hearth extension on all stoves and inserts as measured from the door opening of the unit. Minimum distance of floor protection to the side = 8”. This is measured from the sides of the door opening.
(2) J = Maximum lintel depth without flue offset or smoke deflector.

NOTES:

- ***Facing material that projects more than 3/4” from the wall is considered a mantel or side wall.***

Dimension		Masonry Fireplace UBC Chapter 37
G	Depth Min.	16-1/2”
H	Height Min.	23-1/2”
J	Lintel Max. Depth ❶	5-3/8”
K	Front Width Min.	29-1/2”
L	Rear Width Min.	27-1/4”
❶ *Without use of adjustable offset box or smoke deflector*		

Table 2 - Fireplace Sizing

Also see appliance dimensional views on ***Page 9*** *(see* ***Figure 5****).*

Bottom Clearance	Thermal Protection Thickness	Hearth Extension Depth
		USA
0"	2-1/2"	18”
8"	0”	18”

Table 3 - Hearth Extension / Thermal Protection Requirements

*Distance between hearth and the bottom of the appliance

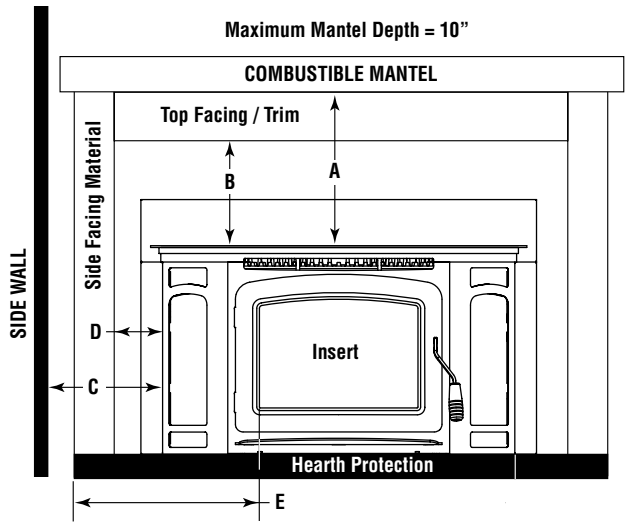

Figure 2

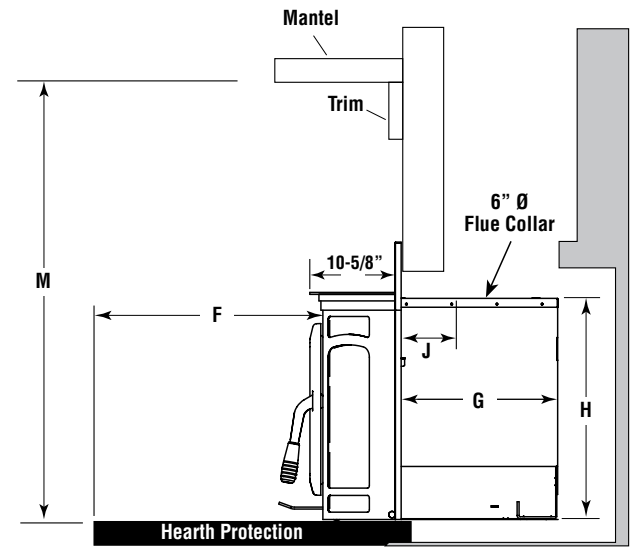

Figure 3

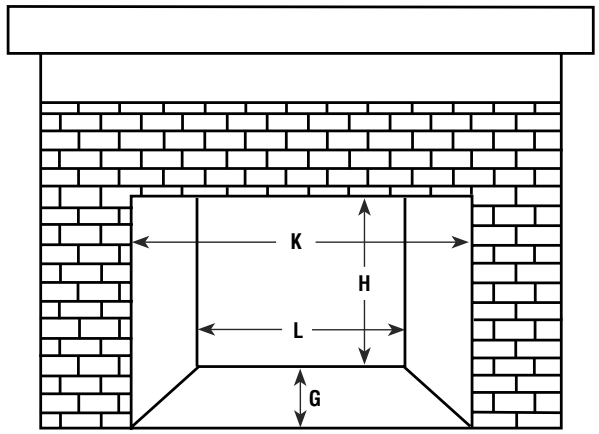

Figure 4 - Minimum Fireplace Cavity

NOTE: DIAGRAMS & ILLUSTRATIONS ARE NOT TO SCALE.

Carrollton™ 300

SPECIFICATIONS

Product Reference Information			
Cat. No.	Description	Shipping Weight	Shipping Volume
F5033	Carrollton™ 300 Wood-Burning Insert	428 lb.	31 cu. ft.

NOTES:

- *Dimensions shown are approximations only (+/- 1/4")*
- *Diagrams, illustrations and photographs are not to scale – consult installation instructions. Product designs, materials, dimensions, specifications, colors and prices are subject to change or discontinuance without notice.*
- *Approved for residential installations.*
- *Optional Kits Available:*
  Door Trim Kit

❶ *Square-foot heating capacities and burn times are approximations only. Actual performance may vary depending upon home design and insulation, ceiling heights, climate, condition and type of wood used, appliance location, burn rate, accessories chosen, chimney installation and how the appliance is operated.*

Specifications

Flue Size	**6"**
Log Length	**17" W x 21" D Max.**
Firebox	**18.2" W x 21.23" D x 13" H Max.** **Volume = 2.91 cu. ft.**
Glass Viewing Area	**16-1/2" W x 11-5/16" H**
EPA Test Load: **Cord Wood: ❶**	**29,181 BTUs/hr.** **100,000 BTUs/hr.**
Maximum Burn Times ❶	**8 hours**
Heating Capacity ❶	**2000 to 3000 sq. ft.**
EPA Grams Per Hour	**1.8 gr/hr**

EPA Phase II and Washington State Approved

Dimensions

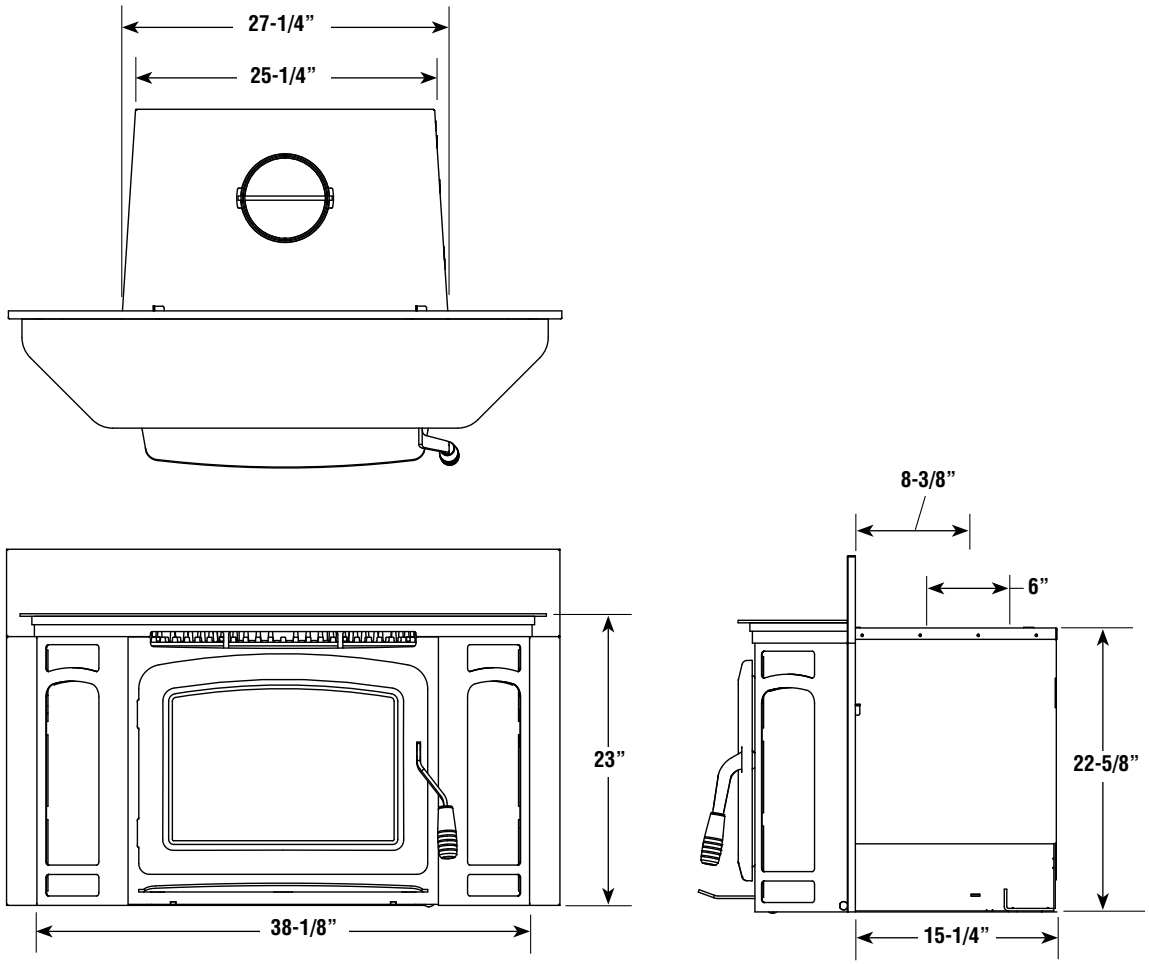

Figure 5

NOTE: DIAGRAMS & ILLUSTRATIONS ARE NOT TO SCALE.

Carrollton™ 300

HEARTH PROTECTION

The hearth/floor protection must a be a thermally rated type II UL 1618 listed floor protection with a minimum R value of 5.2, or 2.08 per inch with a minimum thickness of 2-1/2". The covering must extend to the front, a minimum of 18". It must extend to the sides a minimum of 8" (measured from the door opening).

To calculate the minimum thickness required for alternate material use either the <u>k formula</u> or <u>r formula</u> shown below.

Reference information

k_M = k value per inch of ***alternate*** material
r_M = r value per inch of ***alternate*** material
T_M = minimum thickness required for ***alternate*** material
T_s = standard thickness of the ***alternate*** material

k_L = k value per inch of ***listed*** material
r_L = r value per inch of ***listed*** material
T_L = minimum thickness of ***listed*** material

NOTE: An asterisk "*" in formula below indicates it is a value taken from ***Table 4***.

Listed Material				
	k (per inch)	r (per inch)	Listed Min. Thickness	R-Value
Listed Material	.48 K_L	2.08 r_L	2.5" (2-1/2") T_L	5.2
* Approved Alternate Materials for Floor/Hearth Protection				
Alternative Materials	Thermal Values		Minimum Thickness (rounded to nearest 1/8 inch)	
	k (per inch) K_M	r (per inch) r_M	Min. Thickness T_M	
Kaowool M Board	.48	2.08	2.5" (2-1/2")	
Micore 160™ *U.S. Gypsum*	.35	2.86	1.823" (1-7/8")	

Table 4

<u>k formula</u>:

Example using k formula: If Micore 160 Mineral Fiber Board is to be used for the floor protection, what is the minimum thickness required?

Minimum thickness of alternate material (T_M) = <u>k-value (per Inch) of alternate material</u> (k_M) / k-value (per inch) of listed material (k_L) x Specified min. thickness of listed material (T_L)

$$T_M \text{ (inches)} = \frac{*\,k_M}{*\,k_L} \times *\,T_L$$

$$T_M \text{ (inches)} = \frac{*.35}{*.48} \times *\,2.5"$$

1.823 (inches) = .729 x * 2.5"

Answer - The minimum required thickness of the Micore 160 is 1.823" therefore round up to nearest standard thickness available which is 1.875" (1-7/8")

<u>r formula</u>:

Example using r formula: If Micore 160 Mineral Fiber Board is to be used for the floor protection, what is the minimum thickness required?

Minimum thickness of alternate material (T_M) = r-value (per Inch) <u>of listed material</u> (r_L) / r-value (per inch) of alternate material (r_M) x Specified min. thickness of listed material (T_L)

$$T_M \text{ (inches)} = \frac{*\,r_L}{*\,r_M} \times *\,T_L$$

$$T_M \text{ (inches)} = \frac{*2.08}{*2.86} \times *\,2.5"$$

1.823 (inches) = .729 x * 2.5"

Answer - The minimum required thickness of the Micore 160 is 1.823" therefore round up to near est standard thickness available which is 1.875" (1-7/8")

INSERT INSTALLATION

NOTE: PROFESSIONAL INSTALLATION BY A LICENSED AND BONDED INSTALLER IS RECOMMENDED. SEE YOUR DEALER FOR RECOMMENDATIONS. IMPROPER INSTALLATION OR MIS-USE WILL VOID YOUR WARRANTY AND CREATE A SERIOUS SAFETY HAZARD.

This appliance is approved for use in a masonry fireplace built to UBC Chapter 37 or equivalent with a minimum 25" opening at the front of the fireplace.

These heaters are designed to be installed into an existing masonry fireplace (built to UBC 37 or CAN/ULC 628:2022 standards).

Approved with or without positive flue connection. Approved with minimum 6" diameter stainless steel listed reline system. Country™ wood-burning inserts are tested to UL 1482-2022 / CAN/ULC 628:2022 / UL/ULC 1390:2024 and listed by PFS TECO.

NOTE*: The damper rod & handle is provided in the manual packet and must be installed prior to use. This is accomplished by first attaching the wood handle to the smooth side of the threaded rod and then threading the rod clockwise into the nut inside the left side of the surround panel.*

MASONRY FIREPLACE PRE-INSTALLATION PREPARATION

Remove any doors or screen materials from the fireplace opening. Remove the damper mechanism completely. Also remove grates or ember catches inside the fireplace hearth. If your fireplace is equipped with a smoke shelf or baffle and if it interferes with the installation it may be removed. Do not remove brick or mortar from masonry fireplace to accommodate insert.

Check all clearances for the flue connection prior to starting the install to ensure proper alignment. If there is an alignment problem, connection can be made using a short piece of stainless flex or a stainless steel offset box (available from your dealer). Before installing the liner, make any attachment brackets or drill any holes in the liner, offset box, or insert. Once installed, it may be difficult or impossible to drill additional holes.

CHIMNEY LINER INSTALLATION

IMPORTANT NOTE: See Draft Requirements and Selecting a Proper Venting System on ***Page 4*** to assist you in choosing the proper venting system for your installation.

WARNING: CHIMNEY CONNECTOR MUST BE IN GOOD CONDITION AND KEPT CLEAN. DO NOT INSTALL DAMAGED PARTS.

Remove the existing chimney cap and install a stainless steel liner into the chimney (if a special section has been used or drilled to attach to the insert, it must be the bottom piece). The next piece should be a dripless slip joint, followed by the rest of the chimney liner. Fasten the chimney at the top when it is positioned so that the slip joint will allow the lowest piece to slide up enough to clear the insert during installation. Insulate the top four to six feet between the liner and the chimney to prevent heat loss. Install the cap and flash if necessary to prevent water or creosote from entering the chimney's venting system.

From inside the fireplace firebox, attach any adaptors or flue offsets and slide the liner up as far as necessary for the bottom piece to clear the insert during installation.

This fireplace insert must be installed with a continuous chimney liner of 6" diameter extending from the fireplace insert to the top of the chimney. The chimney liner must conform to the Class 3 requirements of CAN/ULC-S635, Standard for Lining Systems for Existing Masonry or Factory-Built Chimneys and Vents, or CAN/ULC S640, Standard for Lining Systems for New Masonry Chimneys.

Alternate Flue Liner Attachment Method
(for short fireplace installations)

For shorter fireplace firebox installations, where it may be difficult to attach the liner to the flue collar on top of the insert, you can complete the final liner attachment from within the insert firebox as follows:

1. **Remove the screw, bracket and inner collar as shown below.**
2. **Using 3 screws, secure the liner to the inner collar.**
3. **From within the insert firebox, pull down the inner collar (with liner attached).**
4. **Reassemble the components as shown below.**

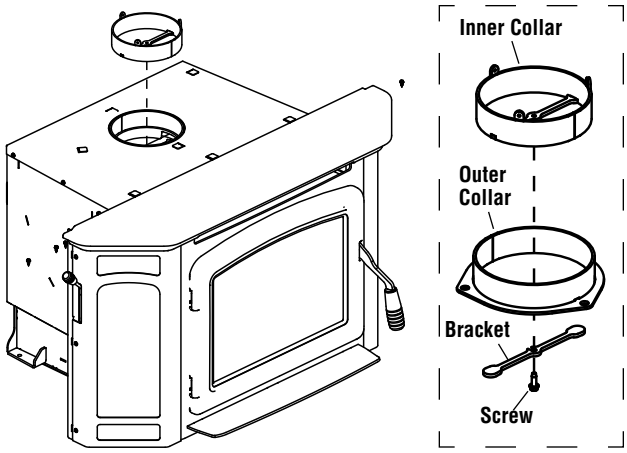

Figure 6

POSITIVE FLUE CONNECTION

A positive flue connection is providing a seal between the vent pipe or liner and the existing fireplace chimney for the purpose of preventing room air passage to the chimney cavity of the fireplace. There are different approved methods to achieve this. See *Direct Connect Positive Flue Connection* on this Page.

Direct Connect Positive Flue Connection

See the following instructions for approved methods of achieving a positive flue connection - See *Figure 7.*

A qualified installer should evaluate the existing fireplace to determine the best method for achieving a positive flue connection between the vent pipe or liner and the existing fireplace chimney. The most common method for achieving a positive flue connection in masonry fireplaces is to secure a seal-off plate (i.e. 22-gauge sheet steel) in the fireplace throat using masonry screws. Other acceptable methods include packing noncombustible material (i.e. high temp fiberglass or ceramic insulation) around the vent pipe or using a flue adaptor. Whatever "seal off" method is used, it must effectively seal the area to prevent room air passage to the chimney cavity of the fireplace.

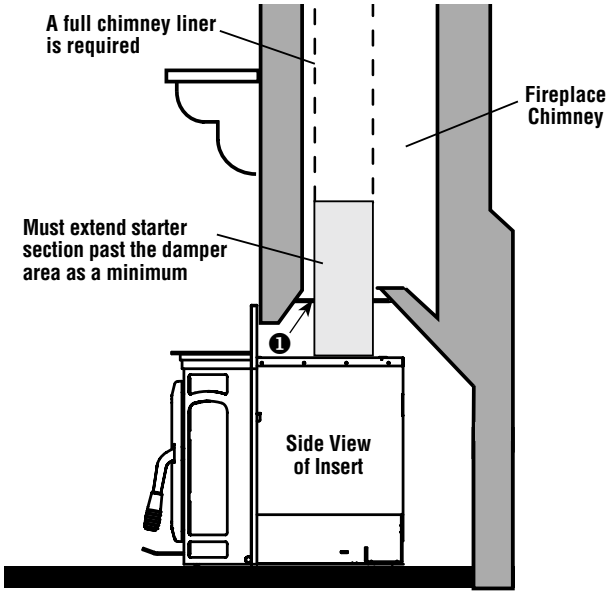

❶ A non-combustible seal is required at the damper area (to prevent dilution air from entering the chimney). See *Direct Connect Positive Flue Connection* on this Page. A seal-off plate method is shown here.

Figure 7 - Positive Flue Connection

NOTE: DIAGRAMS & ILLUSTRATIONS ARE NOT TO SCALE.

Offset Boxes

Offsets can be handled using an offset box (it aligns flue outlet of insert with the fireplace flue *(see **Figure 8**)*. Care should be used to ensure that this adjustable offset box is oriented so it does not angle down when positioned on the insert flue outlet (level or slightly up at the outbound end is recommended).

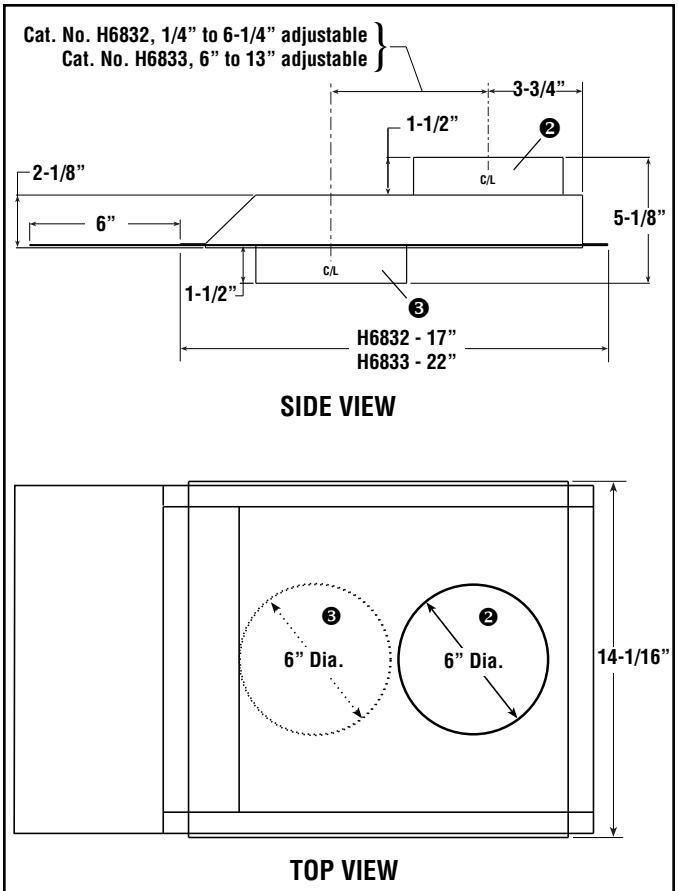

❷Top 6" collar attaches to rigid pipe or flex liner.

❸Bottom 6" collar attaches to connector ring on insert flue outlet.

Figure 8 - Offset Box Dimensions

INSTALLATION PROCEDURE FOR MASONRY FIREPLACES

READ THE ENTIRE INSTALLATION INSTRUCTIONS AND CHECK ALL REQUIRED CLEARANCES PRIOR TO INSTALLING THIS APPLIANCE.

WEAR GLOVES DURING INSTALLATION IN CASE OF SHARP EDGES ON THE FIREPLACE.

⚠ CAUTION

SHARP EDGES - WATCH YOUR FINGERS

Wear gloves to guard against any sharp metal edges.

Position Insert and Connect Venting

Place the insert into the fireplace, making sure to center it side to side. Slide the insert in until the surround mounts are approximately 1/2") from the face of the fireplace where the surround panels cover. Lower the chimney and make attachment to the insert.

Leveling the Insert in the Fireplace

The leveling leg access holes are accessible from inside the firebox. Break away both cover plates and insert the leveling bolts (provided in manual pack). Level the fireplace insert by using a 9/16" socket to adjust the bolts. The leveling bolts are 1" in length and combined with minimal clearance in the firebox, only allows for 1/2" adjustment. If more adjustment is needed, longer 3/8-16 UNC bolts can used at the appropriate lengths. For installs where the fireplace bottom is sloped down toward the back, refractory brick can be used to first level the fireplace floor prior to installing the insert.

Installing Surround Panels and Insert Top

Once the insert is in place and the venting has been connected, install a surround panel kit to cover the exposed fireplace opening. After installing the surround panels, install the insert top warming surface.

Installing Front Support

If front support is necessary, use a front support kit (Part# F2026) to support the front of the insert and fill the space between the hearth and the insert bottom. Leveling legs can be used to support the front of the insert and can be inserted into two 3/8-16 holes located under the front of the firebox.

NOTES:

- *This appliance may be vented into a code-approved masonry chimney with flue liner.*
- *It is necessary to permanently seal any opening between the masonry of the fireplace and the facing masonry.*

NOTE: DIAGRAMS & ILLUSTRATIONS ARE NOT TO SCALE.

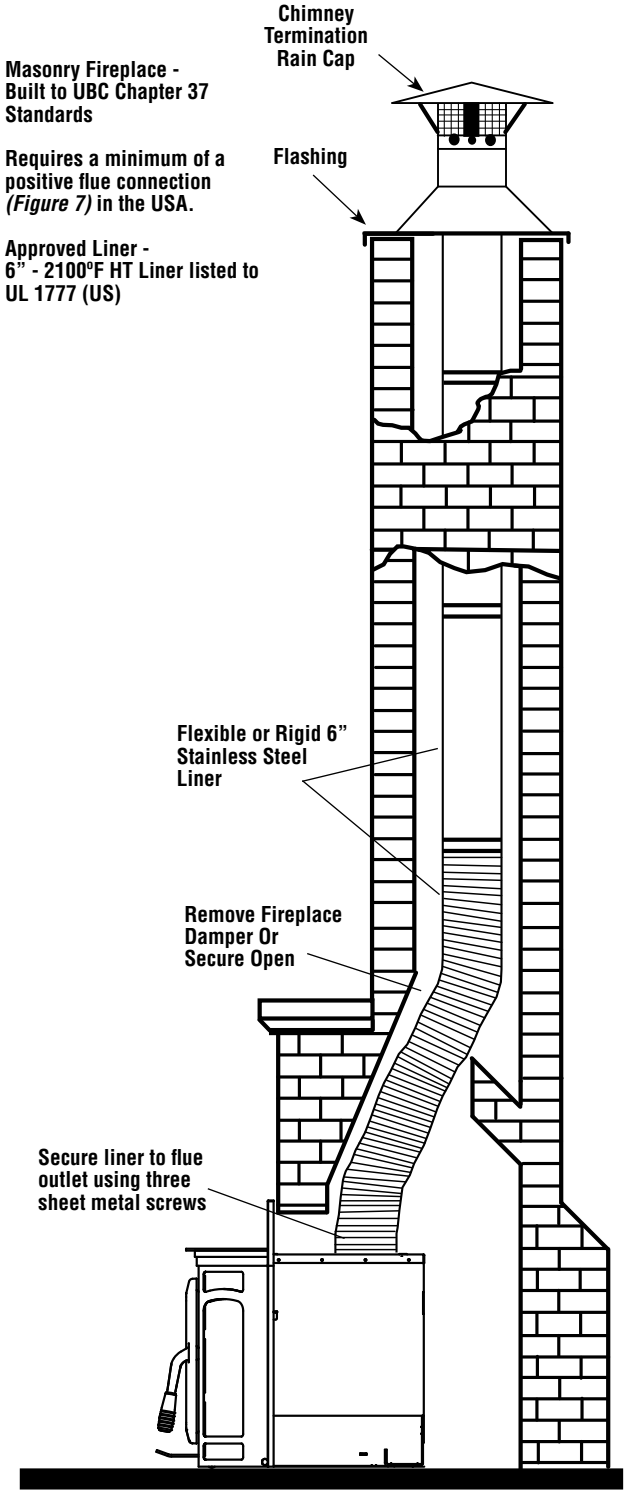

Figure 10 - Typical Installation - Masonry Fireplace

YOUR CHIMNEY INSTALLATION MUST COMPLY WITH LOCAL BUILDING AND FIRE CODES.

INSTALL VENTING SYSTEM PER VENT MANUFACTURERS INSTRUCTIONS!

This fireplace insert must be installed with a continuous chimney liner of 6" diameter extending from the fireplace insert to the top of the chimney. The chimney liner must conform to the Class 3 requirements of CAN/ULC-S635, Standard for Lining Systems for Existing Masonry or Factory-Built Chimneys and Vents, or CAN/ULC-S640, Standard for Lining Systems for New Masonry Chimneys.

NOTE: DIAGRAMS & ILLUSTRATIONS ARE NOT TO SCALE.

OUTSIDE COMBUSTION AIR KIT INSTALLATION

Outside Air Kits

Order:
1 ea. P/N UZIAD Outside Air Coupler Kit (connects outside air ducting, UZI, to stove)
AND
1 ea. P/N UZI Outside Air Ducting Kit (includes 4" insulated flex x 10' long)

An outside air kit may be required for residential installations, check with local authorities having jurisdiction in your area, it may be mandatory.

Outside Air Kit Coupler (one of the following)

Collar with Collar Holder: Center the 4" dia. collar on the air intake opening and then secure with the collar holder, using the four (4) 5/8" Tek Screws provided, lining the plate up with the capture holes on the unit. In some instances the capture holes may be absent; the tek screws should then be used to start the holes directly *(**Figure 11a**)*.

One-piece collar: To install the outside air kit coupler onto the stove, line up the "V" notch in the coupler with the "V" notch in the open on the bottom of the stove. Push and twist so the rolled edge catches the bottom of the stove and continue turning full 360° to lock the coupler in place *(**Figure 11b**)*.

Through the Wall Outside Air Kit Installation

The outside air assembly may be installed according to the following requirements:

A) Duct length should be kept to a minimum.
B) The air intake register must not be installed more than ten (10) feet above the base of the stove.
C) The fresh air must come from outside the house. The air intake must not draw air from the attic, from the basement or garage.
D) The air intake should be installed where it is not likely to be blocked by snow or exposed to extreme wind and away from automobile exhaust fumes, gas meters and other vents.
E) The duct and register may be installed above or below floor level.

- Make a 4-1/4" hole in the outside wall of the house at the chosen location. From outside, place the outside air register in the hole (open side down) and fasten the register to the wall, with screws as shown *(see **Figure 12**)*.
- Install the coupler onto the existing collar on stove *(see **Figure 27**)*.
- Attach the duct to the coupler on stove *(see **Figure 12**)*. Using the aluminum tape provided, wrap the tape around the joint between the flexible duct and the air inlet.

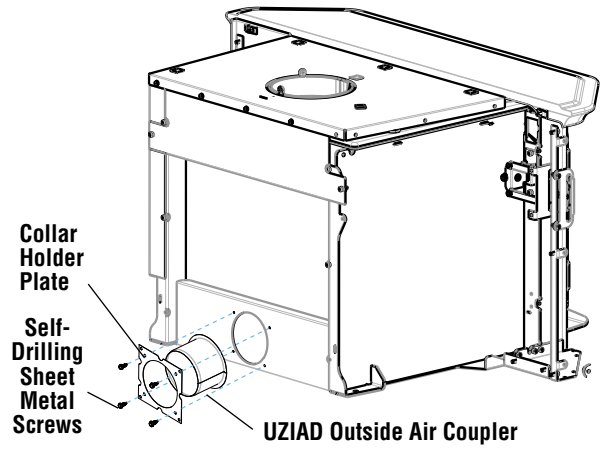

Figure 11a

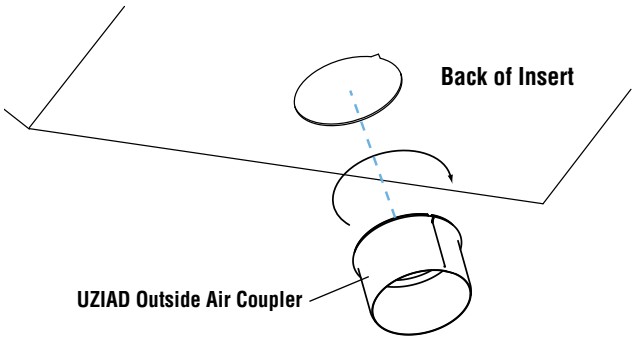

Figure 11b

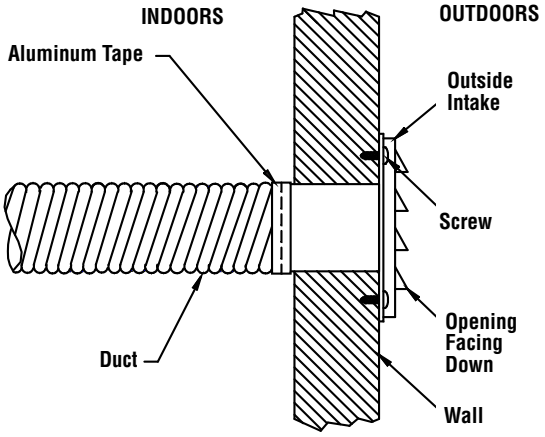

Figure 12 - Through the Wall, Outside Air Termination

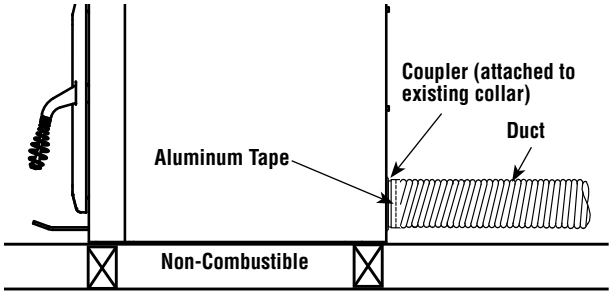

Figure 13 - Outside Air Connection to Stove

NOTE: DIAGRAMS & ILLUSTRATIONS ARE NOT TO SCALE.

Carrollton™ 300

BRICK AND BAFFLE INSTALLATION

CAUTION: Wear gloves in case of sharp edges inside the stove.

WARNING: IF THE BRICKS ARE NOT INSTALLED EXACTLY AS SHOWN BELOW, THEY COULD FALL OUT OF PLACE DURING REFUELING OR BURNING OF THE STOVE CAUSING SERIOUS INJURY.

1. Install brick #1-6 in the numbered sequence shown in ***Figure 15***.
2. Install rear brick support which is included in the firebox on top of #5 and #6 brick. This support will be locked into place when the remainder of side brick are installed.
3. Install remaining brick #7-26 in the numbered sequence shown in ***Figure 15***.
4. Once all the bricks are installed confirm that the already installed baffle boards are in there correct location and resting on the secondary burn tubes.

Firebox Brick Layout as Viewed from the Front

Letter A Brick Are Full Size
9" Long x
4-1/2" Wide x
1-5/16" Thick

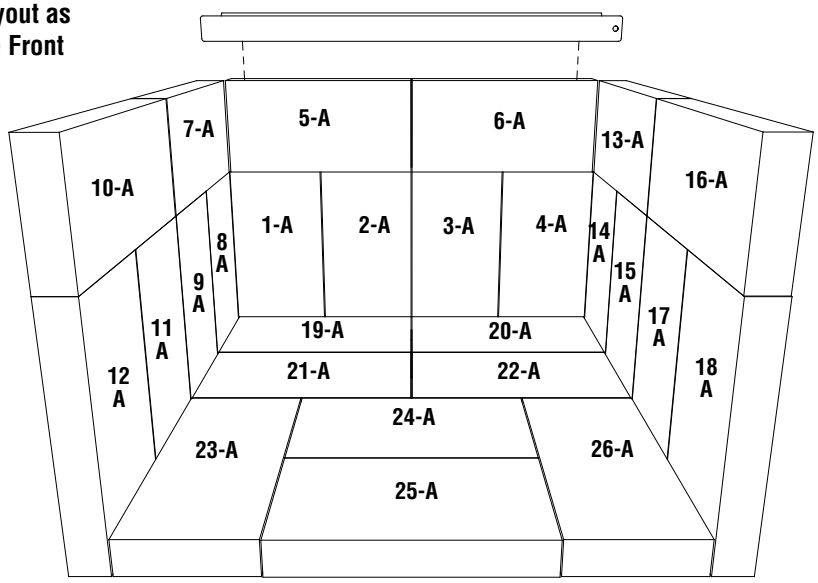

Figure 15 - Brick Diagram

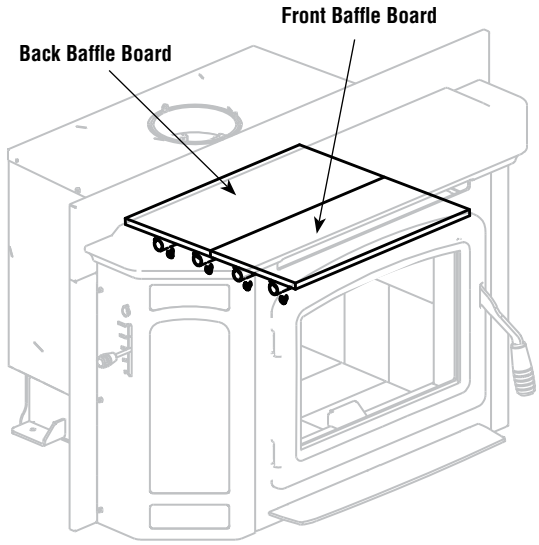

Figure 16 - Baffle Boards Installed

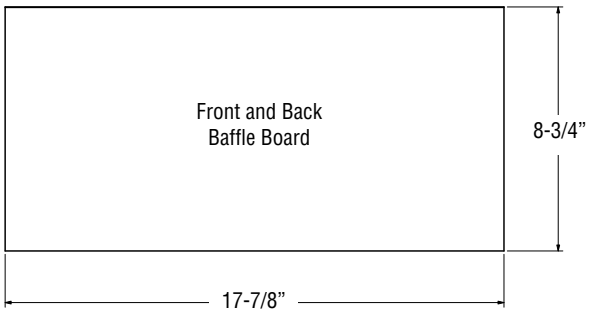

Figure 21 - Baffle Boards

NOTE: DIAGRAMS & ILLUSTRATIONS ARE NOT TO SCALE.

SECONDARY TUBE AND BAFFLE BOARD REPLACEMENT

- Gently lift front baffle board upward and place on rear baffle board.
- Starting front to rear, locate secondary tube retaining pin and rotate counter clockwise; pull pin toward front of stove, allowing capturing end to slide through retaining pin notches as shown.
- Slide secondary tube to the right, releasing it from the left side. Angle left side upward, and slide left to release from right side. Remove tube from stove
- Repeat process for secondary tube number two
- Gently lift top baffle board and slide forward; tilt left side up and left slightly, allowing the right side to drop into the firebox area for removal. Repeat process for rear baffle board
- Secondary tubes three and four can now be removed in same fashion as tubes one and two
- Reinstall baffle boards and secondary tubes in reverse order.
  ** **NOTE**: Secondary tube number one has larger holes, as the remainder of the tubes are the same.*

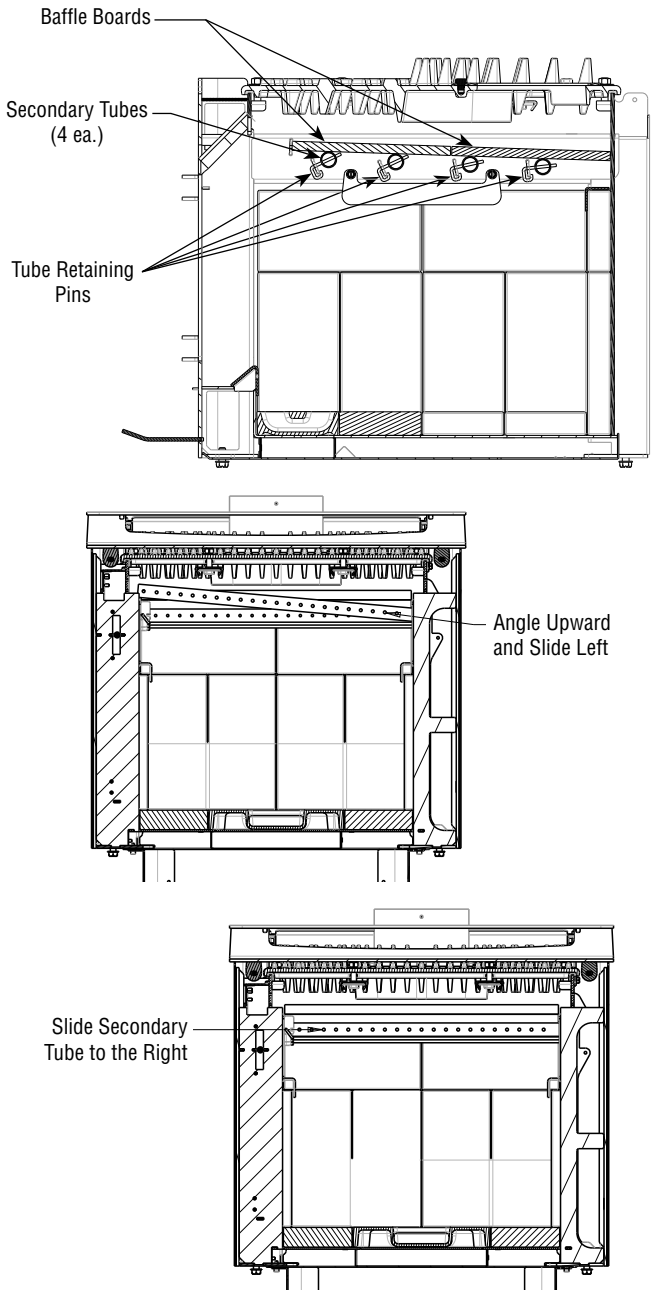

Figure 18 - Secondary Air Tubes

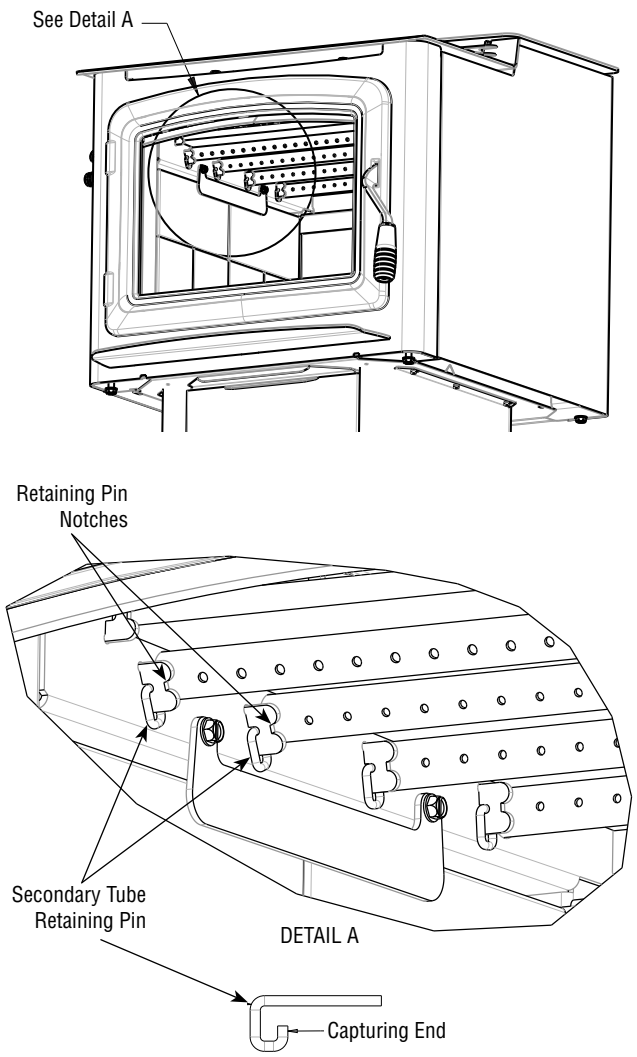

Figure 19 - Secondary Air Tube Retainers

NOTE: DIAGRAMS & ILLUSTRATIONS ARE NOT TO SCALE.

TIMER REPLACEMENT:

- Unscrew damper adjustment lever by turning counter-clockwise and remove from stove.
- Locate and remove left surround panel.
- Lift upward on vertical timer link to gain access to timer engagement link mounting screw; remove screw.
- Remove timer mounting bracket screws and timer assembly.
- Remove timer engagement link and reinstall on new timer assembly.
- Reinstall timer assembly in reverse order; it may be necessary to rotate timer engagement link slightly to properly mount timer and align with vertical timer link (do not rotate more than 180 degrees).
- To reattach timer engagement link, lift upward slightly to align mounting hole with vertical timer link mounting hole. Tighten screw and spacer until tight.
- Verify that the timer linkage can move freely and that there is no binding.

TIMER ADJUSTMENT

- Verify that the vertical timer link is all of the way down and the fireplace door is closed.
- Push the door link forward until it makes contact with the back of the fireplace door.
- Loosen the two linkage adjustment screws.
- Slide the linkage adjuster forward to remove any gap between the adjuster and door link.
- Tighten the linkage adjustment screws.

CHECK:

- Inspect timer linkage to ensure it can move freely and is not binding. Vertical timer link can be lifted in an upward and downward motion (manually engaging and disengaging timer), which will open and close the timer bypass door near the top of the unit. This should operate freely with only slight tension from the torque of the timer. Now manually slide vertical timer link downward, disengaging timer. Open door; timer should reengage, lifting timer bypass door, which will then close in approx. 25-30 minutes. If functioning properly, proceed to reassemble stove. If timer is not functioning properly, check all mounting points within linkage to ensure they are moving freely. A small amount of antisieze or high temp lithium grease may be applied to moving linkage parts for lubrication.
- Reinstall left surround panel in reverse order.
- Reinstall damper adjustment lever.

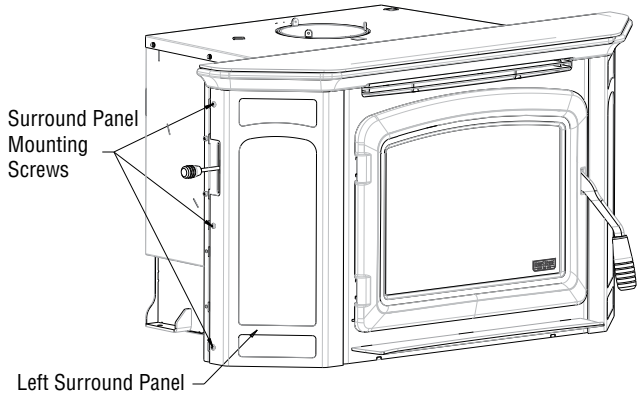

Figure 27b

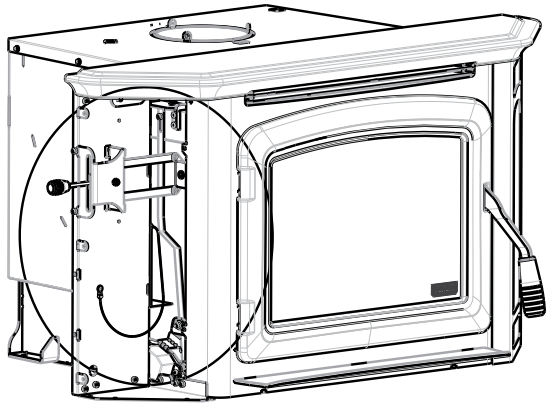

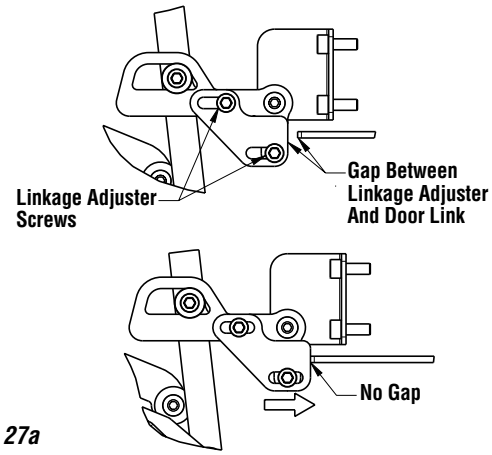

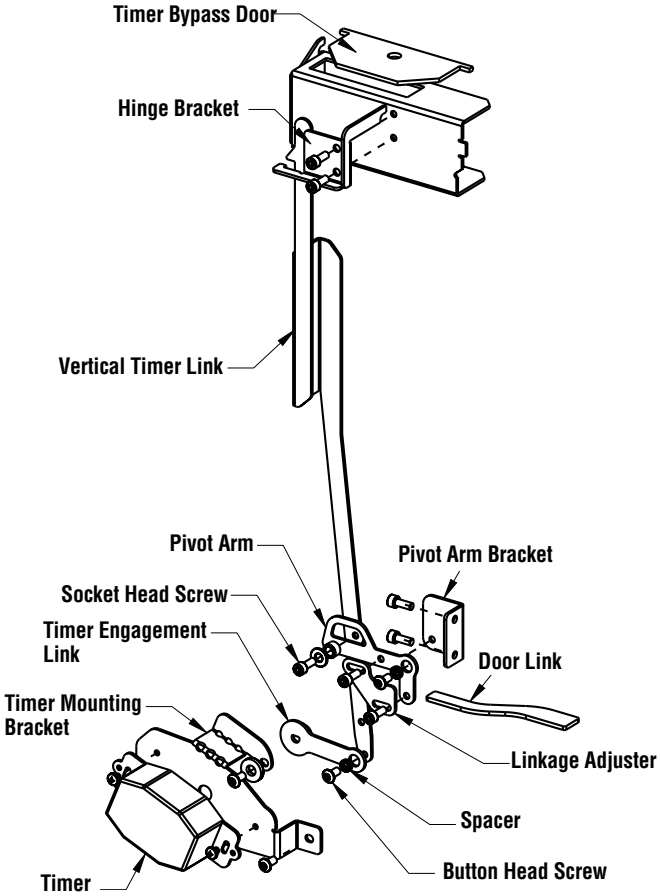

Figure 27a

NOTE: DIAGRAMS & ILLUSTRATIONS ARE NOT TO SCALE.

POST INSTALLATION CHECKS

- ☐ **Check that one of the required surround kits is properly installed per the instructions provided in kit (Instr. # 506033-76). See *Page 29* for ordering information.**

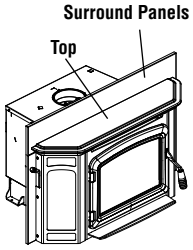

- ☐ **Check that one of the required top warming surface kits is properly installed per the instructions provided in kit (Instr. # 506033-75). See *Page 29* for ordering information.**

- ☐ **Check that all chimney pipe joints are secured and installed according to the manufacturers instruction.**

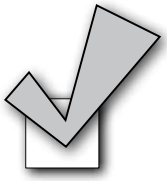

- ☐ **Be sure all roof flashings are watertight (if applicable).**

- ☐ ***Ensure baffle and brick are properly installed (see Page 14).***

FOR YOUR OWN PROTECTION AND INSURANCE PURPOSES, HAVE YOUR CHIMNEY AND CONNECTOR PIPE INSTALLATION INSPECTED BY YOUR LOCAL BUILDING CODE AUTHORITY OR FIRE MARSHAL BEFORE STARTING A FIRE IN YOUR STOVE OR INSERT. NOTIFY YOUR INSURANCE COMPANY.

ATTACHING CONTROL LABELS

Once the surround panels are in place, apply the included control labels as shown in ***Figure 25***.

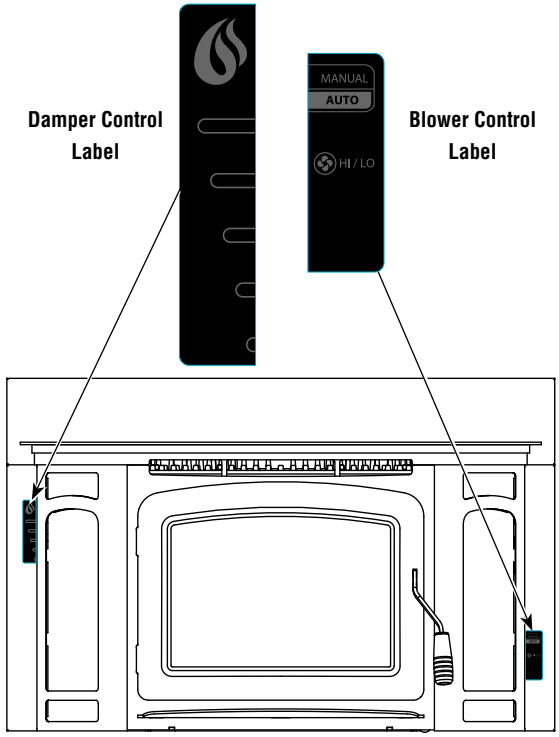

Figure 25 - Control Labels

NOTE: DIAGRAMS & ILLUSTRATIONS ARE NOT TO SCALE.

PAINT CURING

If your appliance has plated accessories, be sure to clean it with a household type glass cleaner and a very soft cloth to remove any fingerprints and residues prior to the first fire and before any fire if the plated accessory has been handled or soiled. Do not close the door tightly during the "Burn-In Period." Also, open the door frequently (every 5-10 minutes) to keep the gasket from adhering to the curing paint. Ventilate the house well during these first firings as the paint gives off carbon dioxide and unpleasant odors. It is recommended that persons sensitive to an imbalance in the indoor air quality avoid the appliance during the curing process.

Your new appliance is painted with a high temperature paint that cures during the first few firings. We recommend that you put your stove or fireplace insert through a regimen of three burns. The first two should last for 20 minutes each at 250 degrees (the appliance should be allowed to cool completely between each burn). The third should be a burn of at least 450 degrees F. for 45-60 minutes. The paint will become soft, gummy and emit non-toxic smoke during these burns. During these first burns, open the appliance door frequently to help prevent the door gasket from adhering to the appliance. After the appliance cools down for the third time, the paint will harden. **DO NOT BUILD A LARGE ROARING FIRE UNTIL THIS CURING EFFECT IS COMPLETE OR YOU MAY DAMAGE THE FINISH OF YOUR STOVE OR INSERT.** Spray can touch-ups should be done only with a high temperature stove paint (cat. no. F5035), available from your dealer.

BURN-IN PERIOD

Please be patient with the heat output of your appliance for the first few weeks. The steel will go through a curing process that eliminates moisture, which is deep in the steel and firebrick. This moisture will reduce initial heat output of your appliance and may make it difficult to start. **(DO NOT OVERFIRE THE STOVE OR INSERT DURING THIS PROCESS. IF THE STOVE OR INSERT OR CHIMNEY BECOMES RED, REDUCE THE AMOUNT OF AIR ENTERING THE STOVE OR INSERT IMMEDIATELY).**

OPERATING HINTS

1. Burn only dry, well-seasoned cord wood. In some states it is illegal to burn wet wood or anything other than clean, dry wood products.
2. Your stove or fireplace insert is designed to operate with the door closed! Operate only with the door shut tightly at all times except when loading wood and possibly on start up to establish a draft. Never leave the unit unattended while the front door is opened.
3. **DO NOT** hit or move the baffle board while loading wood. Occasionally check the baffle. Loading oversized logs may dislodge the baffle boards.
4. **CAUTION: THE DRAFT CONTROL MUST BE FULLY OPEN BEFORE OPENING THE DOOR TO AVOID POSSIBLE COMBUSTION FLASH!!** (Ignition of hot volatile gases as the door is opened).
5. Feeding excessive amounts of fuel to the appliance should be avoided. It is important to supply it with sufficient draft and fuel to maintain a moderately hot fire. If, during overnight burns, heavy creosote deposits develop inside your stove or fireplace insert and on the door, the draft is set too low - review your burning habits!

DOOR OPERATION

Do not operate the appliance with the door open or ajar other than possibly during start up to create a draft (Do not leave the unit unattended while the front door is slightly open during start up). Operating the appliance with the door open other than in initial start up if needed will produce extreme temperatures within the appliance. Damage caused from over-firing is not covered under the manufacturers limited warranty.

⚠ WARNING

Be careful not to abuse door assembly by striking or slamming it. If the door assembly or glass is broken or damaged, they must be replaced with factory original parts before heater can be safely operated. Use only components provided by the manufacturer as replacement parts.

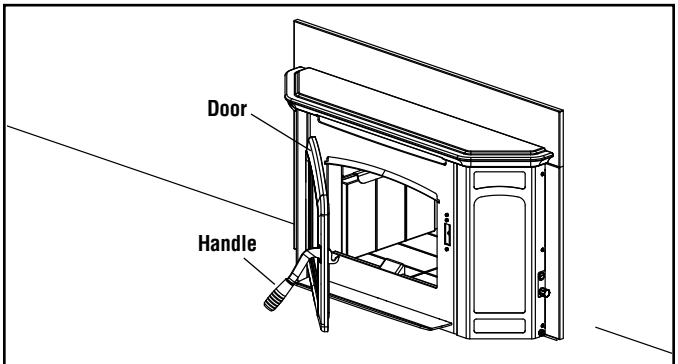

Figure 22

Opening Door - Lift handle and pull to open door

Closing Door - Hold handle lifted, swing door closed then push handle down to engage latch

NOTE: DIAGRAMS & ILLUSTRATIONS ARE NOT TO SCALE.

STARTING AND MAINTAINING A FIRE

1. **NEVER USE FLAMMABLE LIQUIDS TO START OR REKINDLE A SOLID FUEL FIRE!!**
2. Fully open the primary draft control by placing draft control (wood handle located on left side of the stove) in the highest position. This control determines the amount of air entering the stove. Lowering this control reduces the burn rate of the stove. For your convenience, the control is marked with five positions to assist you in obtaining repeatable burn rates.
3. Place a small amount of crumpled paper in the front of the firebox and cover it with a few pieces of kindling.
4. Light the paper and allow sufficient time for the kindling to become fully engulfed in flames. You will now close the wood units front door. Your wood units front door may or may not need to be left slightly open during this start up process, this depends on the appliance model and the amount of draft present.
5. When operating any wood burning appliance, it is important to become familiar with how the damper control affects heat output and the overall temperature of the appliance. A stove thermometer can be a helpful tool to help ensure you are not over-firing your appliance and it will also ensure you are burning fuel at a rate that is most efficient. Place a stove thermometer on the top of the appliance as shown in ***Figure 23A***. Monitor the temperature every 15 minutes or so until you become more familiar with your appliance. Close the damper all the way down if you begin to reach 400 degrees, as this is a sign that you are operating your appliance at too high a temperature.

DO NOT LEAVE THE APPLIANCE UNATTENDED WHILE THE FRONT DOOR IS SLIGHTLY OPEN.

CAUTION: Do Not alter the adjustment range of the draft control for increased firing for any reason.

Operate only with fuel door closed. Maintain all seals in good condition. Do not operate with broken glass.

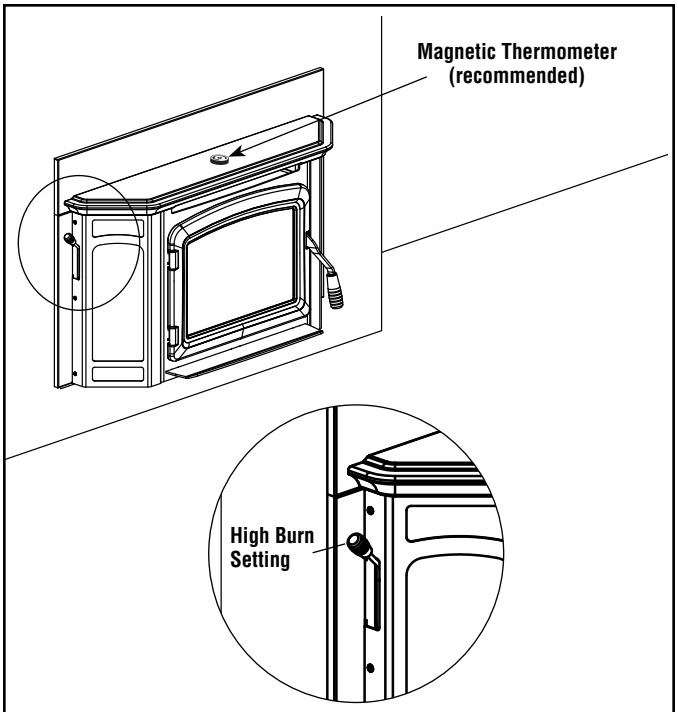

Figure 23A - Damper High Setting

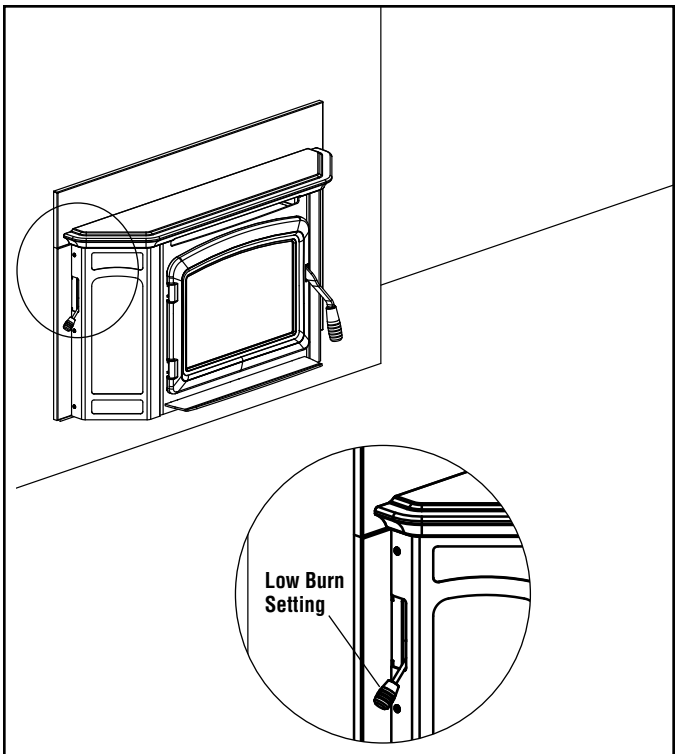

Figure 23B - Damper Low Setting

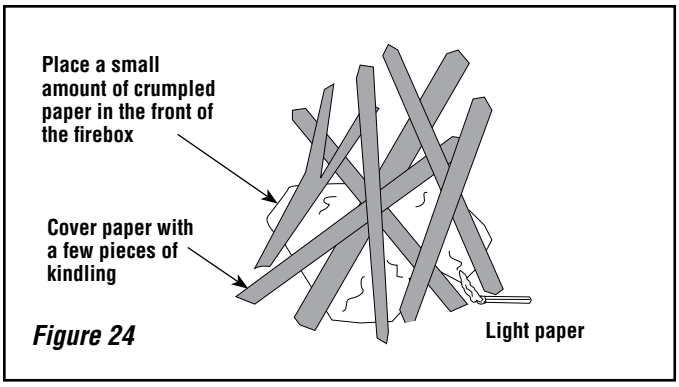

Figure 24

SEE MAINTENANCE SECTION FOR GLASS CLEANING GUIDELINES AND TIPS FOR KEEPING THE GLASS CLEAN *(Page 25)*.

NOTE: DIAGRAMS & ILLUSTRATIONS ARE NOT TO SCALE.

6. Once kindling is burning well, larger pieces of wood may be added, then the door should be fully closed if there was the need to keep it slightly open during start up.
7. For best results, use smaller pieces of wood to get the appliance temperature very high before loading larger wood for sustained burns. If necessary, crack the door to allow ignition of the fuel charge. Do not leave the unit unattended while the front door is slightly open. Now you can add larger pieces of wood and after several minutes of high burn, set the left control for the desired heat output. Check the exhaust in about 15 to 20 minutes *(see **Figure 28**)*. Large amounts of smoke indicate an improper burn setting (either too high or too low). Adjust and recheck in 5 to 10 minutes.

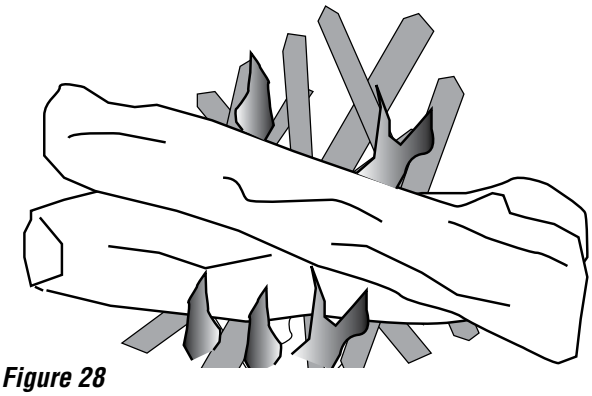

Figure 28

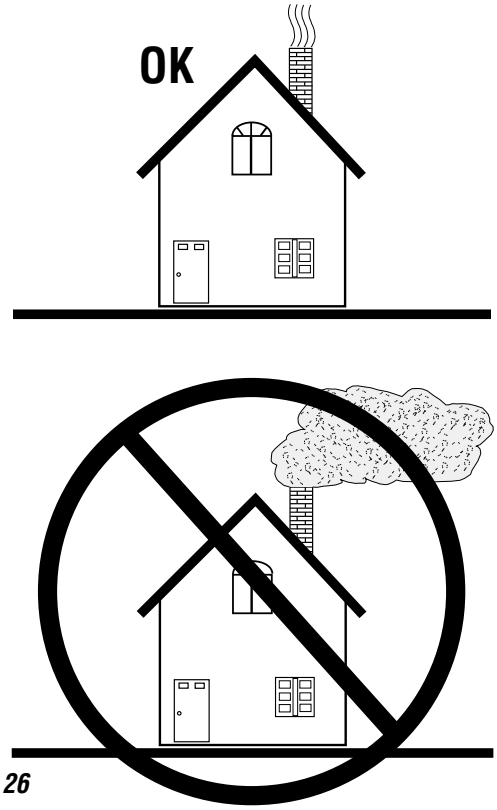

Figure 26

FUEL

This appliance is designed to burn dry seasoned natural wood only (see *Page 23* for a list of prohibited fuels). Failure to burn proper fuels only will void the certification and the warranty of the appliance.

Dry, seasoned wood is that which has been cut, split and allowed to dry under a covered area where air is free to flow and circulate under and around the wood (not under a tarp or plastic). Make sure wood is not stacked directly on the ground, it may absorb moisture from the ground. It should be allowed to dry in these conditions for a minimum of six months, preferably one year or more. **IT MUST BE UNDERSTOOD THAT WOOD CANNOT BE LEFT IN ANY KIND OF WET OR DAMP AREA OR IT WILL NEVER BECOME COMPLETELY SEASONED.**

Do Not store fuel within space heater installation clearances or within the space required for refueling and ash removal.

DO NOT OVERFIRE THIS HEATER

Attempts to achieve heat output rates that exceed heater design specifications can result in permanent damage to the heater.

What does "Well-Seasoned" mean?

When a tree is cut down, the wood is green, full of sap and moisture. This moisture content can exceed 80%, which must be reduced to less than 20%. Wood properly seasoned is then capable of generating the heat the stove or insert was designed to provide.

Green wood does not burn easily. Attempting to burn green wood often results in a lot of smoke and very little fire. Time is the most important factor in seasoning wood. Ideally the moisture content should be reduced to 11-20%. ***NOTE: The use of a firewood moisture meter is recommended to ensure the firewood contains less than 20% moisture. Refer to moisture meter's owner's manual for proper operating instructions.***

Seasoning Guide
Softwoods – 6 months to 18 months
Hardwoods – 12 months to 24 months

Logs that are 5" diameter across or larger should be split in half, three pieces if over 8 inches, and four pieces when over a foot across. If a tree has been dead for 2 – 4 years it still needs to be cut, split, and seasoned for 6 to 24 months depending on the wood.

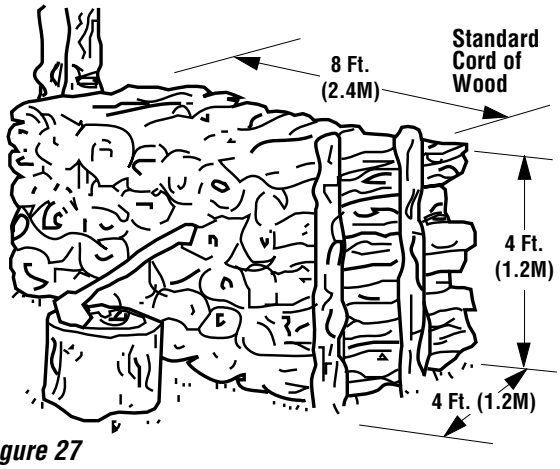

Figure 27

NOTE: DIAGRAMS & ILLUSTRATIONS ARE NOT TO SCALE.

GETTING THE MOST OUT OF YOUR APPLIANCE

Recent developments in wood-burning technology have made wood-burning a cleaner and more convenient way to heat your home. Overall efficiency in a wood-burning appliance is a combination of combustion efficiency and heat transfer efficiency. Whether heating your entire home or just a room or two, your understanding of how to best operate your stove or insert will enhance its overall efficiency and performance. What this can mean to you is longer, cleaner burns, less wood use and more heat.

The following sections will outline techniques you can use to "get the most out of your stove or insert." Please read them carefully.

MAXIMIZING YOUR APPLIANCE'S OVERALL EFFICIENCY

It is important to know that for high, combustion efficient, clean burns, you will need to have sufficient temperatures inside the firebox for thorough combustion. The best method for determining if you have sufficient temperatures is to watch the brick lining in your firebox. When you first light your stove or fireplace insert, the firebrick will turn a dark brown or black. After 20 to 30 minutes of a hot fire, most of the bricks should return to near their original beige color. This means the firebrick have reached a high enough temperature for your appliance to achieve high combustion efficiency and you are ready to adjust the draft control to a lower setting.

Second and just as important, is achieving a high level of heat transfer efficiency. Slowing the rate of flow through the stove or insert enhances heat transfer, thus allowing more time for heat to be transferred into your home. To do this, be sure to thoroughly preheat your stove or insert and then reduce the amount of primary air by closing the draft control down to a lower setting. (More air may produce a slightly greater amount of heat, but will greatly increase wood consumption).

To get the most out of your appliance, you will need to combine good combustion efficiency with good heat transfer practices. The following are some tips on how to operate your appliance to achieve the highest overall efficiency.

1. Thoroughly preheat your appliance before slowing the burn rate by closing the draft control.
2. When loading wood into a preheated stove or fireplace insert, allow a vigorous fire to build before lowering the draft control.
3. Operate your stove or fireplace insert as much as possible in the low to medium burn ranges.
4. Do not lower the draft setting so low as to completely extinguish the flames in the firebox. Check for at least some small flames twenty minutes after setting the draft control.
5. Do not continually operate your stove or fireplace insert in the high (wide open) setting. This wastes wood by carrying a great deal of heat up the chimney and can damage your stove or fireplace insert and chimney.
6. Go outside and check your chimney. More than a very small amount of smoke indicates wasted heat, creosote build up and pollution *(see **Figure 26**)*.

ACHIEVING CLEAN, LONG BURNS

To achieve long burn times, after having thoroughly preheated the appliance, let the appliance top cool down to 250 to 325 degrees. Now load the firebox and set the draft control. At this point, you may need to burn the fireplace insert with the draft open for a few minutes to ignite the wood. All Country stoves and inserts are EPA tested for emissions at low burn with the air control completely closed. Whether or not you should burn Your appliance with the air control completely closed will depend on the following factors:

- How you load your wood
- Your chimney type, height and draft
- Your wood type and its moisture content
- The temperature of the appliance or fireplace insert
- Which model stove or insert you have

In order to maximize the burn time of your stove or insert you may need to experiment to get the right balance of starting temperature, wood type, and draft control setting for your particular venting configuration. Do not reload the stove or insert for long burns when the stainless secondary tubes or baffles are glowing red, or when the stove or insert is uncomfortably hot to load. This indicates the stove or insert is too hot to load for a long burn.

BLOWER OPERATION

Blower Operation - The blower can be operated manually or automatically (blower will turn on when the stove or insert is hot and turn off when the stove or insert is cool).

The rocker switch on the control panel allows you to select between manual operation or automatic operation as follows (see ***Figure 29***):

MANUAL OPERATION: Turn rocker switch to the manual position (up) and adjust rheostat knob to the desired speed. The blower will have to be manually turned "OFF" by rotating the rheostat knob counterclockwise until it clicks.

AUTO OPERATION: Turn rocker switch to the "AUTO" position and the rheostat to the ON position (rotate rheostat knob clockwise until it clicks). When the stove or insert warms up, the blower will automatically turn on (adjust rheostat knob to the desired speed setting). When the stove or insert cools down, the blower will automatically turn off.

Rheostat Operation - The highest blower speed is obtained by turning the rheostat knob clockwise until it clicks "ON", then rotate towards "HIGH" to increase blower speed. Rotate the knob clockwise for a lower speed. To turn off, continue to rotate the knob counterclockwise until it clicks "OFF."

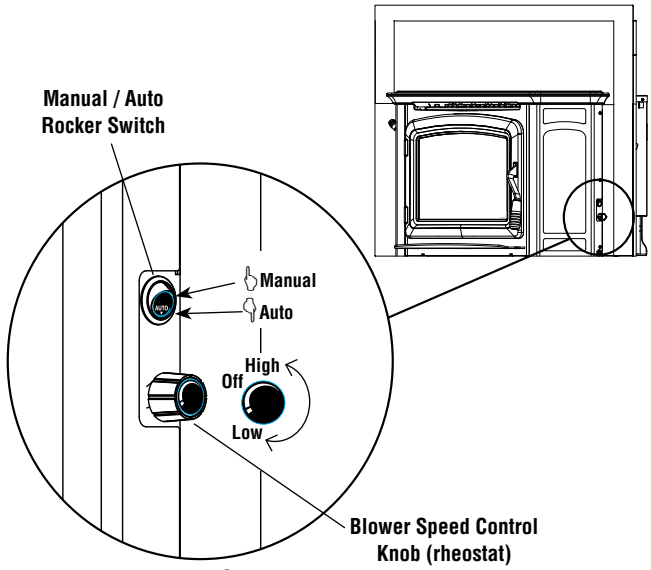

Figure 29 - Blower Controls

Blower Operation Guidelines

While in auto operation mode, the blower will turn off and on based on the temperature of the appliance. Auto operation ensures there is sufficient heat build-up to warm the air being moved by the blower before the blower is turned on. Likewise, when the appliance cools off, the blower is turned off to prevent circulating cool air. Depending on the size and intensity of the fire it may be necessary to adjust the blower speed accordingly to ensure uninterrupted blower operation. For example a small fire may require a slower blower speed to keep the heat output by the blower consistent. If the blower is operated in manual mode, it may be necessary to adjust the blower speed as the fire begins to burn down and the appliance is no longer hot enough to effectively heat the air moved by the blower. If the air coming from the blower feels cool, one should either decrease the blower speed or stoke the fire to build up more heat.

NOTE: Turn blower off before opening the door to load the fuel.

⚠ WARNING

The blower must be plugged directly into a properly grounded three-prong receptacle, 120 VAC, 60 Hz, single phase. Do not cut or remove the grounding prong from this plug. Do not route power cord under or in front of appliance.

Installation must be in accordance with National Electrical Code, ANSI/NFPA 70 - latest edition.

DANGER: Disconnect power before servicing blower.

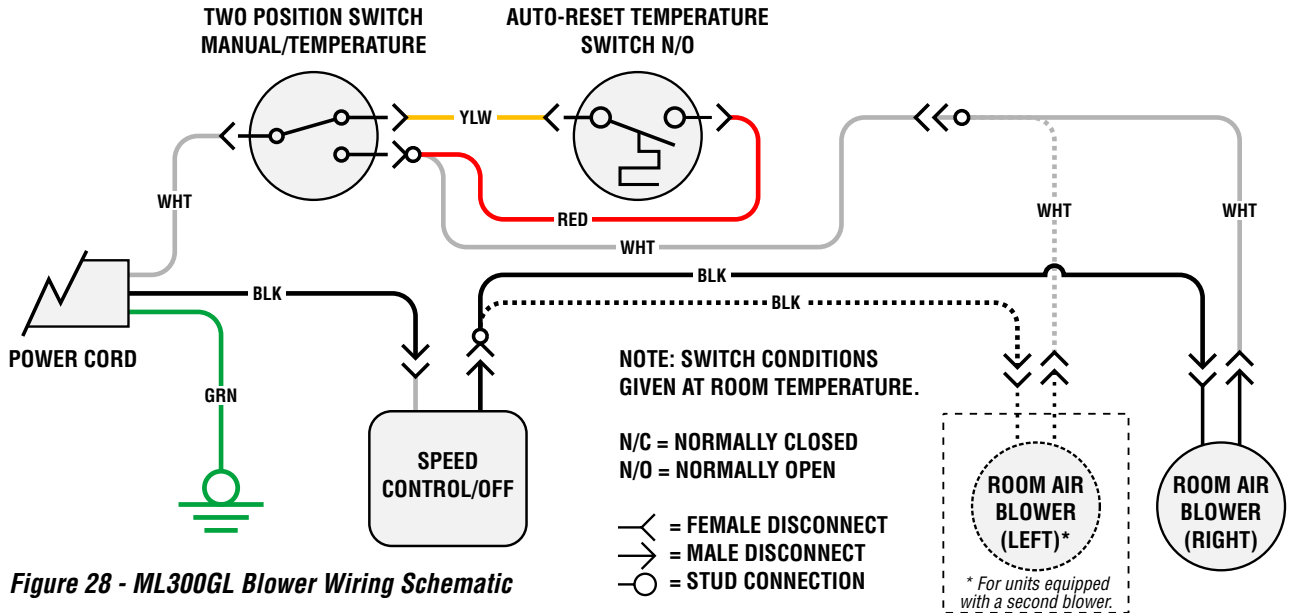

Figure 28 - ML300GL Blower Wiring Schematic

NOTE: DIAGRAMS & ILLUSTRATIONS ARE NOT TO SCALE.

DO'S AND DON'TS

DO NOT: Install or operate the appliance before reading this manual.

DO NOT: Close the draft beyond the point at which the flames are completely extinguished.

DO NOT: Open the appliance door without fully opening the draft first.

DO NOT: Burn driftwood or wood that has been in salt water. This includes mill ends and scrap lumber that has been floated in salt water on the way to the mill. (This will void your warranty).

DO NOT: Handle the Nickel Door Trim unnecessarily. Do not push or pull the stove door by any other means other than the handle.

DO NOT: Force oversized logs into the firebox as this may dislodge the baffle assembly.

DO NOT: Close the door tightly during Burn-In period.

DO: Be sure to clean any fingerprints from optional accessories that have plated surfaces before burning the appliance. Clean the plated surfaces only with household type glass cleaner and a very soft cloth.

DO: Consult local building department if other than recommended clearances are desired.

DO: Read instructions for the baffle boards occasionally to ensure you have not bumped or moved them out of place when loading wood.

DO: Check the chimney and baffle monthly to make sure they are clean.

DO: Burn seasoned, dry wood only! (RAIN = WET WOOD)

DO: Open the door frequently during Burn-In period to keep gasket from adhering to the curing paint.

DO: Enjoy the warm feeling of your new Country Stoves appliance.

Smoke Detector Recommended

Since there are always several potential sources of fire in any home, we recommend installing smoke detectors. If possible, install the smoke detector in a hallway adjacent to the room (to reduce the possibility of occasional false activation from the heat produced by these appliances). If your local code requires a smoke detector be installed within the same room, you must follow the requirements of your local code. Check with your local building department for requirements in your area.

Carbon Monoxide Monitor Recommended

Carbon Monoxide Poisoning: Early signs of carbon monoxide poisoning are similar to the flu with headaches, dizziness and/or nausea. If you have these signs, obtain fresh air immediately. Some people are more affected by carbon monoxide than others, including pregnant women, people with heart or lung disease or anemia, those under the influence of alcohol, and those at high altitudes.

It is against federal regulations to operate wood heaters in a manner inconsistent with operating instructions in the manual.

PROHIBITED FUELS

This heater is designed to burn natural wood only. Higher efficiencies and lower emissions generally result when burning air dried seasoned hardwoods, as compared to softwoods or to green or freshly cut hardwoods. DO NOT BURN:

- Garbage;
- Lawn clippings or yard waste;
- Materials containing rubber, including tires;
- Materials containing plastic;
- Waste petroleum products, paints or paint thinners, or asphalt products;
- Materials containing asbestos;
- Construction or demolition debris;
- Railroad ties or pressure-treated wood;
- Manure or animal remains;
- Salt water driftwood or other previously salt water saturated materials;
- Unseasoned wood;
- Christmas tree branches;
- Paper products, colored paper, cardboard, plywood, or particleboard;
- gasoline;
- naphtha;
- engine oil;
- flammable liquids;
- solvents;
- grease; or
- coal

The prohibition against burning these materials does not prohibit the use of fire starters made from paper, cardboard, saw dust, wax and similar substances for the purpose of starting a fire in an affected wood heater.

Burning these materials may result in release of toxic fumes or render the heater ineffective and cause smoke. Intense firing with these materials may overheat the fireplace, causing damage to the unit, a fire or even possibly igniting a chimney fire if the chimney is creosoted. Burning unapproved fuel, resulting in excessive pollutants being emitted, may be prohibited and subject to a fine or other penalty by the authority having jurisdiction in your area.

NOTE: DIAGRAMS & ILLUSTRATIONS ARE NOT TO SCALE.

MAINTENANCE

Have your product inspected at least once a year by a qualified service technician to ensure gaskets, air tubes, baffles, and venting are in good repair to ensure proper performance. Have degraded items replaced by a qualified service technician.

THIS WOOD HEATER NEEDS PERIODIC INSPECTION AND REPAIR FOR PROPER OPERATION. IT IS AGAINST FEDERAL REGULATIONS TO OPERATE THIS WOOD HEATER IN A MANNER INCONSISTENT WITH OPERATING INSTRUCTIONS IN THIS MANUAL.

DOOR HINGES: If door hinges need lubricating, use an anti-seize compound (never use oil) available from your dealer.

DOOR LATCH: Adjustment Instructions - Remove the right side heat shield by loosening the 3 screws located on the side of the insert. Using a "L" shaped 5/32" allen wrench, loosen the locking screw in the latch assembly as shown in ***Figure 30*** . With the locking screw loosened, adjust the top 5/32" allen screw ***(Figure 30)*** in the front of the insert to adjust the door tension. Turning the screw to the right will tighten the door, turning the screw to the left will loosen the door. When you loosen the door it will be easiest to pull the roller pin to the full forward position and make slight adjustments to tighten to the desired tension. Assure that the tension on the front door creates a good seal between the gasket on the front door and the firebox front. After adjusting the door tension, re-tighten the lock screw and replace the side panel.

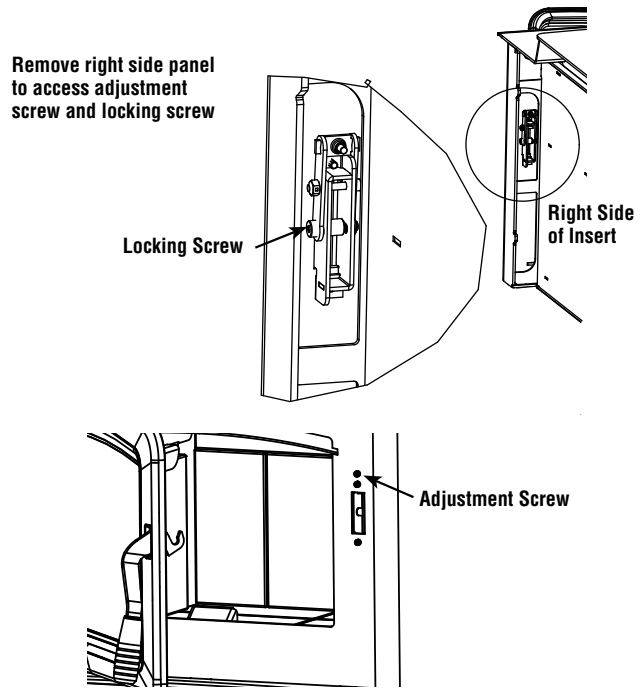

Figure 30

DOOR GASKET: Periodically check gasket to make sure it is not over-compressed. If compressed, replace with a special woven door rope. (Don't try substituting rope, only use approved door rope).

PLATED ACCESSORIES: Clean only with a household type glass cleaner and a very soft cotton cloth. Other products may damage plated finish, paint and gaskets.

BAFFLE BOARDS: Your baffle boards should be inspected during every chimney cleaning. If either board is damaged then replace baffle boards.

CREOSOTE FORMATION AND NEED FOR REMOVAL

When wood is burned slowly, it produces tar and other organic vapors, which combine with expelled moisture to form creosote. The creosote vapors condense in the relatively cool chimney flue of a slow-burning fire. As a result, creosote residue accumulates on the flue lining. When ignited, this creosote makes an extremely hot fire. The chimney and chimney connector should be inspected at least once monthly during the heating season to determine if a creosote buildup has occurred. If creosote has accumulated (1/8" or more), it should be removed to reduce the risk of a chimney fire.

Establish a routine for the fuel, wood burner and firing technique. Check daily for creosote build-up until experience shows how often you need to clean to be safe. Be aware that the hotter the fire the less creosote is deposited, and weekly cleaning may be necessary in mild weather even though monthly cleaning may be enough in the coldest months. Contact your local municipal or provincial fire authority for information on how to handle a chimney fire. Have a clearly understood plan to handle a chimney fire.

DISPOSAL OF ASHES

Whenever ashes get 3 to 4 inches deep in your firebox, and when the fire has burned down and cooled, remove excess ashes. Leave an ash bed approximately 1 inch deep on the firebox bottom to help maintain a hot charcoal bed.

Ashes should be scooped out of a cool stove or fireplace insert with a small metal shovel. Ashes should be placed in a steel container with a tight fitting lid and moved outdoors immediately. Other waste shall not be placed in this container. The closed container of ashes should be placed on a non-combustible floor or on the ground, well away from all combustible materials, pending final disposal. If the ashes are disposed of by burial in soil or otherwise locally dispersed, they should be retained in the closed container until all the cinders have thoroughly cooled. Ashes can ignite up to 72 hours after removal from the fireplace insert.

⚠ WARNING

Inspect and clean chimney and connector frequently. Under certain conditions of use, creosote buildup may occur rapidly.

NOTE: DIAGRAMS & ILLUSTRATIONS ARE NOT TO SCALE.

MAINTENANCE

GLASS REPLACEMENT INSTRUCTIONS
*(Refer to **Figure 31**)*

Step 1. Remove Door Assembly - Remove the upper and lower hinge pins by pressing the bottom of each hinge pin up, then pull out from the top. Lift off door and place face down on a soft surface.

Step 2. Remove Glass Retainer Screws (10 ea.) - Using an 1/8" allen wrench remove the ten glass retainer screws. To locate screws, peel back the door gasket as necessary. The screws are located by the holes in the stainless steel glass retainer strips.

Step 3. Remove Glass - Carefully remove broken glass one piece at a time (protective leather gloves are recommended).

Step 4. Clean Door Frame - Clean the area of the door frame where the new glass with gasket will be installed.

Step 5. Install New Glass Assembly - Install the new glass with gasket (use only factory supplied 5mm ceramic glass with gasket. **Do not substitute**).

Step 6. Reinstall Retainer and Screws - Carefully reinstall the glass retainer and screws. Be very careful not to overtighten the screws (this could result in glass breakage when the stove or insert is hot).

Step 7. Reinstall Door - Align hinges on door frame with corresponding hinge holes on the face of stove or insert. Reinstall the upper and lower hinge pins from the top.

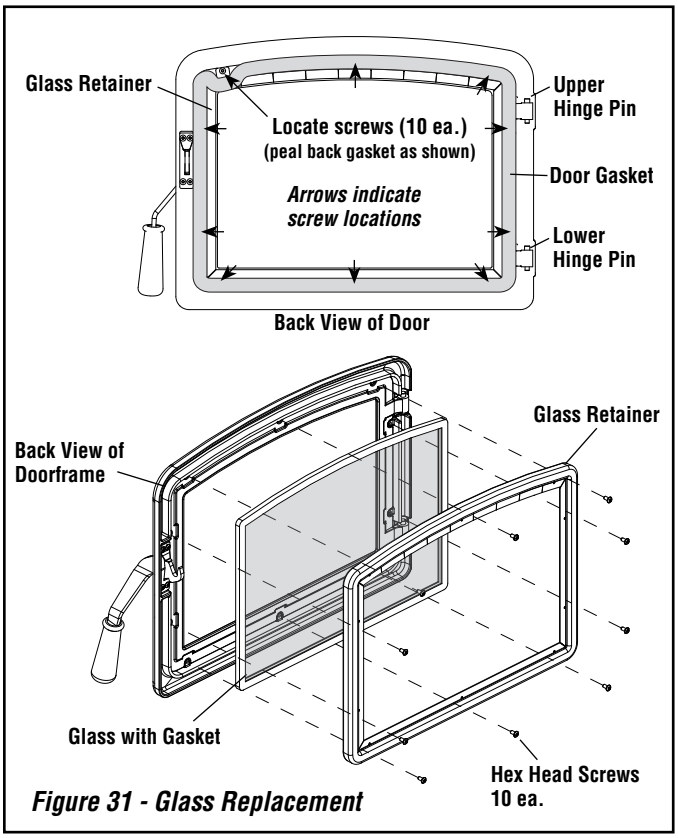

Figure 31 - Glass Replacement

GLASS CLEANING GUIDELINES

WARNING: DO NOT CLEAN GLASS WHEN APPLIANCE IS HOT!

Glass on any wood stove or fireplace insert will not stay perfectly clean. Here are some guidelines for cleaning and caring for the glass:

- Ensure the appliance is cold prior to cleaning glass.
- This appliance is designed to provide a flow of air over the inside of the glass, where along with high heat helps inhibit build-up on the glass. When build-up occurs, a commercial glass cleaner designed for stoves is recommended. Regular household glass cleaners will not clean creosote.
- Do not use abrasives such as steel pads, steel wool or oven cleaner as they will scratch the glass. Never scrape glass with a razor blade as this may pit the glass and make it impossible to clean in the future.
- Do not use chemical glass cleaners as they may damage the gaskets or painted surfaces.

TIPS FOR KEEPING THE GLASS CLEAN

- Burn only dry seasoned cord wood. Wet wood = Dirty glass.
- A short, hot fire (15 - 20 minutes) may help to clean off some of the normal buildup. Lower burns = more build-up. Higher burns = less build-up.
- Keep freshly loaded wood away from the glass.
- After reloading, allow all the wood to catch flame before dampering down the appliance.

Removal of the fireplace insert for the purpose of inspecting the fireplace insert and fireplace - See *Page 11*, Reverse installation instructions.

⚠ CAUTION

Cleaning Glass: Ensure appliance is cold prior to cleaning glass. A commercial glass cleaner designed for stoves is recommended. Do not use abrasive cleaners. Do not clean with any materials, which may scratch or otherwise damage the glass. Scratches on the glass can develop into cracks or break. Inspect the glass regularly. If you detect a crack, extinguish the fire and contact your dealer for a replacement.

NOTE: DIAGRAMS & ILLUSTRATIONS ARE NOT TO SCALE.

TROUBLESHOOTING

Problem	Solution
POOR DRAFT:	Extend chimney in length or have the chimney realigned to the proper size flue. Oversized chimneys normally have poor drafts. Remember, the appliances' draft depends solely on the natural draft of the chimney (See Draft Requirements on ***Page 4***). If your stove or fireplace insert is not drafting properly, your chimney is the problem. All stoves and fireplace inserts are thoroughly tested to ensure proper draft with the correct size chimney flue.
EXCESSIVE DRAFT:	With better chimneys being more common, excessive draft can be an issue. Alleviate excessive draft by slowing the burn rate of the appliance once it has reached proper operating temperature (See Maximizing Your appliances Overall Efficiency on ***Page 21***).
DIRTY GLASS:	1) Burn smaller, hotter fires and check to make sure you are not setting the draft down too far with the draft control. 2) Make sure your wood is well seasoned and dry (not open to rain - see Creosote ***(Page 24)*** and Fuel ***(Page 23)*** sections. 3) See Poor Draft section (above) and Clean Glass (above).
SMOKES WHEN DOOR IS OPEN:	1) If smoke is entering the room, check to make sure your baffle boards are properly installed. 2) Check the chimney for blockage due to creosote (see Creosote section on ***Page 24***). 3) Check draft (See POOR DRAFT section above).
WOOD BURNS TOO FAST:	1) The draft control must be closed further. 2) Add fuel at lower firebox temperatures. 3) Load wood side to side and reduce the flow of air under wood. 4) The door seal may need replacing, check for leakage. 5) See "Excessive Draft." 6) Timer bypass door may be stuck open. See ***Figure 21*** "Timer Replacement".
POOR HEAT OUTPUT:	1) Check your wood. Wet, moist, unseasoned wood will not produce heat. 2) Your stove or fireplace insert needs to be seasoned (moisture removed from the steel and brick). Continue to burn a fire. It normally takes from one to three weeks of burning to season your stove or fireplace insert (See Burn-In Period on ***Page 18***). 3) See Excessive Draft section above.
PAINT GIVES OFF ODOR (smoke):	Paint is tempering-in. Burn only moderately hot for the first few days until paint is fully cured. Then burn a very hot fire to cure any paint that may not easily cure. Open windows or door to ventilate (See Burn-In Period on ***Page 18***).

REPLACEMENT PARTS - MODEL CARROLLTON™ 300

Contact your dealer to obtain any of these parts. Never use substitute materials. Use of non-approved parts can result in poor performance and safety hazards.

FRONT DOOR PARTS LIST		
Item #	Description	Cat. No.
1	Inner Door Frame, Cast Iron	H8365
2	Outer Door Frame, Cast Iron	H8366
3	Glass Gasket 1”	H8380
4	Door Gasket 7/8”	H5639
5	Ceramic Glass With Gasket	H8392
6	Door Handle Kit	H8395
7	Door Latch Assembly (4 button head screws and latch)	H8397
8	Glass, Retainer Kit	H8394
9	Door Hardware Kit (includes 2 pins, door roller and 10 button head screws and door set screw)	H8398
BLOWER PARTS		
10	Snap switch	H8682
11	Right Side Blower	F4930
12	Left Side Blower (for units equipped with a second blower)	F4931
---	Wire Harness	H8684
13	Rheostat	H5742
14	Toggle Switch	H8066
MISCELLANEOUS PARTS		
---	Dry Graphite (apply to door handle bushing)	71052
---	Anti Seize, 2 Gram Pouch	H5633
17	Heat Exchanger Bolt Kit	H8387
18	Flue Ring Bolt Kit	H8388

MISCELLANEOUS PARTS (continued)		
Item #	Description	Cat. No.
---	Taptite Qty 8	H8390
---	Button Head Screw Qty 8	H8391
---	Control Labels	H8685
FIREBOX AND TIMER PARTS		
22	Secondary Tube Retainer Clips (4 required)	H8367
23	Replacement Secondary Air Tube Kit	F3846
24	Back Brick Retainer	J7602
25	Complete Firebrick Kit (26 bricks included)	H9082
26	Firebrick 4-1/2” X 9”, Each	H5612
27	Baffle Board Kit	H9083
---	Timer Assembly	F3848
---	Linkage Assembly	F4929
BODY PARTS		
28	Damper Rod	H8393
29	Damper Assembly	H8396
30	Damper Assembly Linkage	F2031
31	Cast Iron Heat Exchanger (hardware included)	H8369
32	Left Side Heat Shield Assy (hardware included)	F2032
33	Right Side Heat Shield Assy (hardware included)	F2033
34	Top Heat Shield (hardware included)	F2034
35	Heat Exchanger Gasket	H8377
36	Flue collar base (hardware included)	F2035
37	Flue collar insert (hardware included)	F2036
38	Right side front panel	F2037
39	Left side front panel	F2038
40	Rear Heat Shield (hardware included)	F2039

REPLACEMENT PARTS - MODEL CARROLLTON™ 300

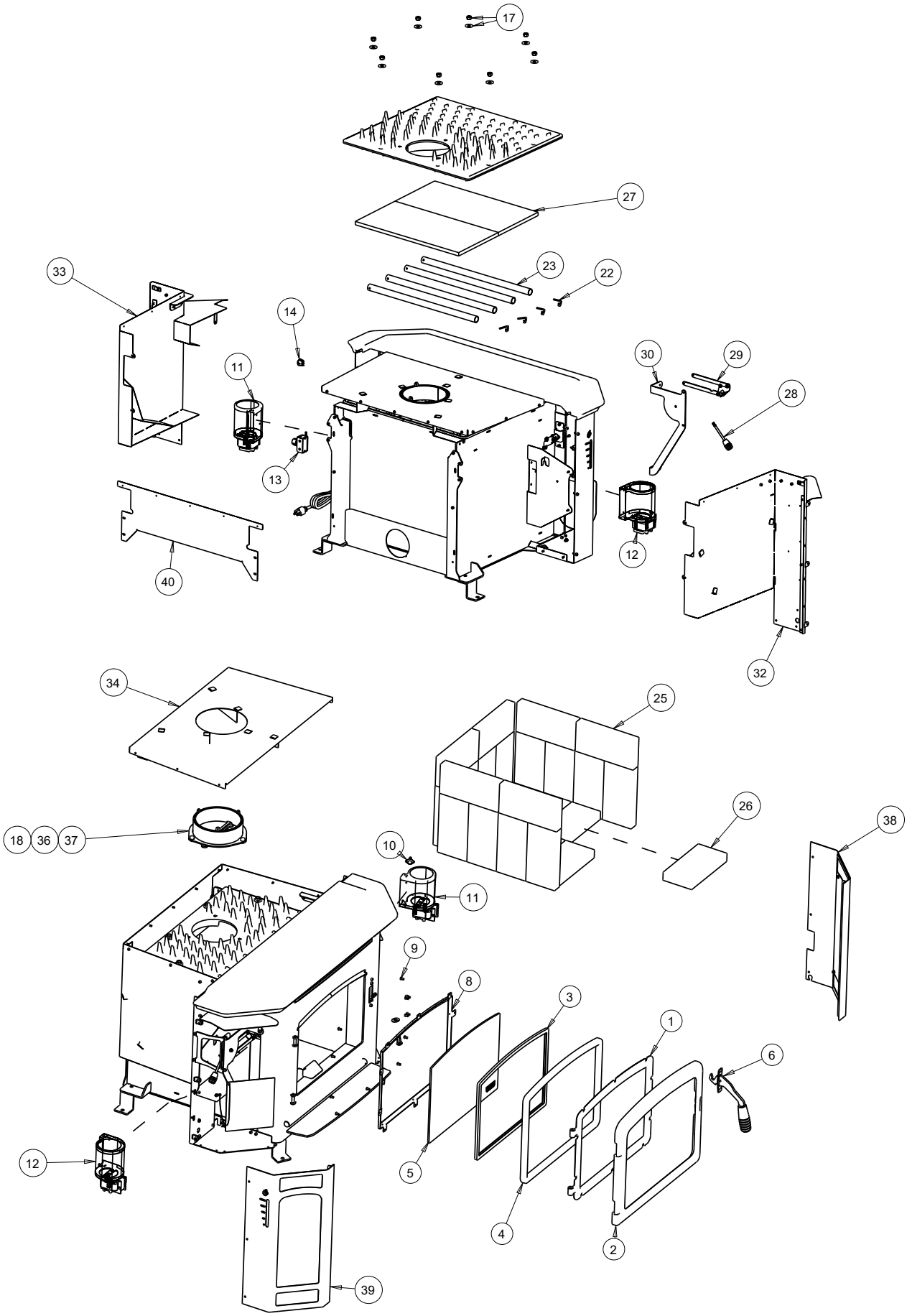

NOTE: DIAGRAMS & ILLUSTRATIONS ARE NOT TO SCALE.

ACCESSORIES - MODEL CARROLLTON™ 300

Model	Description	Cat. No.
TOP WARMING SURFACE KITS (ONE REQUIRED)		
TOP-STEEL-ML300	Steel Top	F2028
TOP-CASTIRON-ML300	Cast Top	F2029
DOOR TRIM KITS		
DRTRM-ML230-NKL	Door Trim, Nickel	H8346
DRTRM-ML230-BRNKL	Door Trim, Brushed Nickel	H8347
SURROUND KITS (ONE REQUIRED)		
ML300-FP2942	Surround Kit, 29” X 42-1/2” Black	F2021
ML300-FP2949	Surround Kit, 29” X 49-1/2” Black	F2022
ML300-FP3342	Surround Kit, 33” X 42-1/2” Black	F2023
ML300-FP3349	Surround Kit, 33” X 49-1/2” Black	F2024
ML300-FPTRIM3450	Surround Kit, 34” X 50” Black Trimmable	F2025
OUTSIDE AIR KITS		
UZIAD	Outside Air Coupler for Connection of UZI to appliance	UZIAD
UZI	Outside Air Kit (4’’ I.D. x 10 ft. long insulated flex)	UZI
MISC.		
ZC-SUPPRT-ML300	ZC Support	F2026
---	Touch-up Spray Paint Kit, Hi-Temp Satin Black	F5035

SAFETY / LISTING LABEL - MODEL CARROLLTON™ 300

CONTACT YOUR LOCAL BUILDING OR FIRE OFFICIALS ABOUT RESTRICTIONS AND INSTALLATION INSPECTION IN YOUR AREA

Listed Masonry Fireplace Accessory/Insert

COUNTRY STOVES

Manufactured By :
INNOVATIVE HEARTH PRODUCTS
1769 East Lawrence Street
Russellville, AL 35654 USA

PFS C US

"PREVENT HOUSE FIRES"

Install and use only in accordance with manufacturer's installation instructions and your local building codes. Do not connect this unit to a chimney flue serving another appliance.

Blower Electrical Rating: 120V, 60 Hz, 0.8 Amp

Do not route power cord under or in front of appliance.

Replace glass only with 5mm ceramic. Operate only with doors closed.

This wood heater needs periodic inspection and repair for proper operation. Consult the owner's manual for further information. It is against federal regulations to operate this wood heater in a manner inconsistent with the operating instructions in the owner's manual.

Not to be installed in any factory-built fireplace.

DO NOT INSTALL IN A TRANSPORTABLE BUILDING.

Certification test emissions value 1.8 g/hr per EPA Method 28R.

Report No. : 25-476

Serial No. ML300GL -

Model: ML300GL

Tested to: UL 1482-2022 / CAN/ULC 628:2022 / UL/ULC 1390:2024

Room Heater, Solid Fuel Type

Minimum Clearance to Combustible Materials - Inches

(A) Clearance from Insert top to Mantel = 26".
Maximum mantel depth = 10".
(B) Clearance from insert top to combustible = 24".
(C) Minimum clearance to combustible sidewall = 8".
(D) Minimum clearance to combustible side trim = 2".
(E) Minimum distance of floor protection to the side = 8".
This is measured from the sides of the door opening.
(F) Minimum distance from front of insert to combustible = 18".

INSERT CLEARANCE DIAGRAM

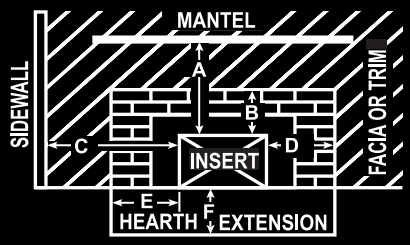

HEARTH EXTENSION		
Height	Thermal Protection Thickness	Hearth Extension Depth
0"	2-1/2"	18"
8"	0"	18"

A chimney liner must extend from this appliance to the top of the chimney. Faceplate Required.

The hearth/floor protection must a be a thermally rated type II UL 1618 listed floor protection with a minimum R value of 5.2, or 2.08 per inch with a minimum thickness of 2-1/2".

Install only in a masonry fireplace, built to UBC Chapter 37. Do not remove brick or mortar from masonry fireplace to accommodate insert. Approved with minimum 6" diameter stainless steel listed reline system. Remove and clean behind unit frequently, as creosote build up may occur rapidly. See owner's manual for reductions on mantel, trim and floor protection.

CAUTION: HOT WHILE IN OPERATION. DO NOT TOUCH. KEEP CHILDREN, CLOTHING, FURNISHINGS AND COMBUSTIBLE MATERIAL A CONSIDERABLE DISTANCE AWAY. CONTACT MAY CAUSE SKIN BURNS. SEE NAMEPLATE AND INSTRUCTIONS. DO NOT OVERFIRE. IF HEATER OR CHIMNEY CONNECTOR GLOWS, YOU ARE OVERFIRING. INSPECT AND CLEAN CHIMNEY AND CONNECTOR FREQUENTLY. UNDER CERTAIN CONDITIONS OF USE, CREOSOTE BUILDUP MAY OCCUR RAPIDLY. DO NOT USE GRATE OR ELEVATE FIRE - BUILD WOOD FIRE DIRECTLY ON HEARTH. FEED DOOR MUST BE CLOSED DURING FIRING EXCEPT WHEN ADDING FUEL. KEEP ASH DOOR CLOSED TO AVOID EXCESS HEAT. DANGER: RISK OF ELECTRICAL SHOCK. DISCONNECT POWER BEFORE SERVICING UNIT.
TYPE OF FUEL: SOLID WOOD ONLY.

Date of Manufacture

2026	2027	2028	JAN.	FEB.	MAR.	APR	MAY	JUN	JUL	AUG	SEP	OCT	NOV	DEC
☐	☐	☐	☐	☐	☐	☐	☐	☐	☐	☐	☐	☐	☐	☐

U.S. ENVIRONMENTAL PROTECTION AGENCY
Certified to comply with 2020 particulate emission standards using crib wood.

Part No. #901257-00, Rev. 3, 06/2026 DO NOT REMOVE THIS LABEL Made in U.S.A.

Innovative Hearth Products
Country Stoves™ Brand Wood Burning Stove and Insert
Limited Lifetime Warranty

THE WARRANTY

Innovative Hearth Products ("IHP") Limited Lifetime Warranty warrants your Country Stoves™ Brand Wood Burning Stove or Insert ("Product") to be free from defects in materials and workmanship at the time of manufacture. The Product body, firebox and ceramic glass carry the Limited Lifetime Warranty. Ceramic glass carries the Limited Lifetime Warranty against thermal breakage only. After installation, if covered components manufactured by IHP are found to be defective in materials or workmanship during the Limited Lifetime Warranty period and while the Product remains at the site of the original installation, IHP will, at its option, repair or replace the covered components. If repair or replacement is not commercially practical, IHP will, at its option, refund the purchase price or wholesale price of the IHP product, whichever is applicable. IHP will also pay IHP prevailing labor rates, as determined in its sole discretion, incurred in repairing or replacing such components for up to five years. THERE ARE EXCLUSIONS AND LIMITATIONS to this Limited Lifetime Warranty as described herein.

COVERAGE COMMENCEMENT DATE

Warranty coverage begins on the date of purchase. In the case of new home construction, warranty coverage begins on the date of first occupancy of the dwelling or six months after the sale of the Product by an independent IHP dealer/distributor, whichever occurs earlier. The warranty shall commence no later than 24 months following the date of product shipment from IHP, regardless of the installation or occupancy date.

EXCLUSIONS AND LIMITATIONS

This Limited Lifetime Warranty applies only if the Product is installed in the United States or Canada and only if operated and maintained in accordance with the printed instructions accompanying the Product and in compliance with all applicable installation and building codes and good trade practices.

This warranty is non-transferable and extends to the original owner only. The Product must be purchased through a listed supplier of IHP and proof of purchase must be provided. The Product body and firebox carry the Limited Lifetime Warranty from the date of installation. Vent components, trim components and paint are excluded from this Limited Lifetime Warranty. The following do not carry a Limited Lifetime Warranty but are warranted as follows:

Cast Iron Heat Exchanger – Replacement for five years from the date of installation
Cast iron parts – Replacement for one year from the date of installation
Catalyst – Carries a separate warranty. Refer to the warranty certificate provided for that part
Electrical components – Repair or replacement for one year from date of installation
Gaskets – Replacement for one year from the date of installation.
Gold & nickel plating – Replacement for two years from date of installation. Excludes tarnishing
Refractory & screens – Replacement for two years from date of installation. Excludes hairline cracks
Removable air tubes – Repair or replacement for seven years from date of installation. IHP prevailing labor rates for years one through five.
Labor coverage – Prevailing IHP labor rates apply for the warranty period of the component, unless otherwise noted

Parts not otherwise listed carry a 90 day warranty from the date of installation.

Whenever practicable, IHP will provide replacement parts, if available, for a period of 10 years from the last date of manufacture of the Product.

IHP will not be responsible for: (a) damages caused by normal wear and tear, accident, riot, fire, flood or acts of God; (b) damages caused by abuse, negligence, misuse, or unauthorized alteration or repair of the Product affecting its stability or performance. (The Product must be subject to normal use with approved fuels listed in the Operation Manual provided with the product. Fuel products with abnormal burning characteristics, including but not limited to fuel such as driftwood, coal or plywood and wood products using a binder may burn at excessive temperatures and may cause damage to the Product or may cause it to function improperly; IHP stoves, inserts and high efficiency EPA fireplaces are approved for burning dry seasoned wood only.); (c) damages caused by failing to provide proper maintenance and service in accordance with the instructions provided with the Product; (d) damages, repairs or inefficiency resulting from faulty installation or application of the Product.

Coverage of this Limited Lifetime Warranty is conditional upon the appliance being operated without the use of grates, irons or any other method to elevate the fire.

IHP is not responsible for inadequate system draft caused by air conditioning and heating systems, mechanical ventilation systems, or general construction conditions which may generate negative air pressure in the room in which the appliance is installed. Additionally IHP assumes no responsibility for smoking conditions caused by inadequate chimney height, adjoining trees or buildings, adverse wind conditions or unusual environmental factors and conditions. Certain IHP Products are listed for use with Security Chimneys International, Ltd. chimney systems only. Use of chimney components other than that specified in the Product manual will void the Product warranty.

This Limited Lifetime Warranty covers only parts and labor as provided herein. In no case shall IHP be responsible for materials, components or construction which are not manufactured or supplied by IHP or for the labor necessary to install, repair or remove such materials, components or construction. Additional utility bills incurred due to any malfunction or defect in equipment are not covered by this Limited Lifetime Warranty. All replacement or repair components will be shipped F.O.B. from the nearest stocking IHP factory.

LIMITATION ON LIABILITY

It is expressly agreed and understood that IHP's sole obligation and the purchaser's exclusive remedy under this warranty, under any other warranty, expressed or implied, or in contract, tort or otherwise, shall be limited to replacement, repair, or refund, as specified herein.

In no event shall IHP be liable for any incidental or consequential damages caused by defects in the Product, whether such damage occurs or is discovered before or after replacement or repair, and whether such damage is caused by IHP's negligence. IHP has not made and does not make any representation or warranty of fitness for a particular use or purpose, and there is no implied condition of fitness for a particular use or purpose.

IHP makes no expressed warranties except as stated in this Limited Lifetime Warranty. The duration of any implied warranty is limited to the duration of this expressed warranty.

No one is authorized to change this Limited Lifetime Warranty or to create for IHP any other obligation or liability in connection with the Product. Some states and provinces do not allow the exclusion or limitation of incidental or consequential damages, so the above limitations or exclusions may not apply to you. The provisions of this Limited Lifetime Warranty are in addition to and not a modification of or subtraction from any statutory warranties and other rights and remedies provided by law.

INVESTIGATION OF CLAIMS AGAINST WARRANTY

IHP reserves the right to investigate any and all claims against this Limited Lifetime Warranty and to decide, in its sole discretion, upon the method of settlement.

To receive the benefits and advantages described in this Limited Lifetime Warranty, the appliance must be installed and repaired by a licensed contractor approved by IHP.

Contact IHP at the address provided herein to obtain a listing of approved dealers/distributors. **IHP shall in no event be responsible for any warranty work done by a contractor that is not approved without first obtaining IHP's prior written consent.**

HOW TO REGISTER A CLAIM AGAINST WARRANTY

In order for any claim under this warranty to be valid, you must contact the IHP dealer/distributor from which you purchased the product. If you cannot locate the dealer/distributor, then you must notify IHP in writing. IHP must be notified of the claimed defect in writing within 90 days of the date of failure. Notices should be directed to the IHP Warranty Department at 1769 East Lawrence Street; Russellville, AL 35654 or visit our website at WWW.COUNTRYSTOVES.COM.

Printed in U.S.A. © 2024 Innovative Hearth Products
P/N 901262-00, Rev. A, 08/2025

Innovative Hearth Products
1769 East Lawrence Street • Russellville, AL 35654

WARRANTY

Your wood appliance is covered by a limited warranty (provided with the appliance). Please read the warranty to be familiar with its coverage.

Retain this manual. File it with your other documents for future reference.

REPLACEMENT PARTS

See ***Pages 27-28*** for a complete replacement parts list. Use only parts supplied from the manufacturer.

Normally, all parts should be ordered through your distributor or dealer. Parts will be shipped at prevailing prices at time of order.

When ordering repair parts, always give the following information:

1. The model number of the appliance.
2. The Serial Number of the appliance.
3. The part number.
4. The description of the part.
5. The quantity required.
6. The installation date of the appliance.

If you encounter any problems or have any questions concerning the installation or application of this system, please contact your dealer.

Innovative Hearth Products
1769 East Lawrence Street
Russellville, AL 35654
Countrystoves.com

PRODUCT REFERENCE INFORMATION

We recommend that you record the following important information about your appliance. If you did not purchase your appliance directly from an IHP dealer, then contact us at Countrystoves.com to find your nearest IHP dealer who will answer your questions or address your concerns.

Model Number _____

Serial Number _____

Date Installed _____

Your Dealer's Name _____

NATIONAL FIREPLACE INSTITUTE
NFI
CERTIFIED
www.nficertified.org

We recommend that our woodburning hearth products be installed and serviced by professionals who are certified in the U.S. by the National Fireplace Institute® (NFI) as NFI Woodburning Specialists or who are certified in Canada by Wood Energy Technical Training (WETT).

Wood Energy Technical Training
www.wettinc.ca

Innovative Hearth Products (IHP) reserves the right to make changes at any time, without notice, in design, materials, specifications, and prices, and also to discontinue colors, styles, and products. Consult your local distributor for fireplace code information.

INNOVATIVE HEARTH PRODUCTS

Printed in U.S.A. © 2024 Innovative Hearth Products